BF2510A12060

THREE-POLE CONTACTOR, IEC OPERATING CURRENT IE (AC3) = 25A, AC COIL 60HZ, 120VAC, 1NO AUXILIARY CONTACT



Product designation			Power contactor
Product type designation			BF25
Contact characteristics			
Number of poles		Nr.	3
Rated insulation voltage Ui IEC/EN		V	690
Rated impulse withstand voltage Uimp		kV	6
Operational frequency			
	min	Hz	25
	max	Hz	400
IEC Conventional free air thermal current Ith		A	32
Operational current Ie			
	AC-1 (≤40°C)	A	32
	AC-1 (≤55°C)	A	26
	AC-1 (≤70°C)	A	23
	AC-3 (≤440V ≤55°C)	A	25
	AC-4 (400V)	A	10
Rated operational power AC-3 (T≤55°C)			
	230V	kW	7
	400V	kW	12.5
	415V	kW	13.4
	440V	kW	13.4
	500V	kW	15
	690V	kW	11
Rated operational power AC-1 (T≤40°C)			
	230V	kW	12
	400V	kW	21
	500V	kW	26
	690V	kW	36
IEC max current Ie in DC1 with L/R ≤ 1ms with 1 poles in series			
	≤24V	A	20
	48V	A	18
	75V	A	18
	110V	A	6
	220V	A	–
IEC max current Ie in DC1 with L/R ≤ 1ms with 2 poles in series			
	≤24V	A	23
	48V	A	23
	75V	A	23
	110V	A	16
	220V	A	1
IEC max current Ie in DC1 with L/R ≤ 1ms with 3 poles in series			
	≤24V	A	23
	48V	A	23
	75V	A	23
	110V	A	18

The characteristics described in this document are subject to updates or modifications at any time. The descriptions, technical and functional information, illustrations and instructions in this brochure are purely illustrative, and are consequently not contractually binding

	220V	A	12
IEC max current Ie in DC1 with L/R ≤ 1ms with 4 poles in series			
	≤24V	A	–
	48V	A	–
	75V	A	–
	110V	A	–
	220V	A	–
IEC max current Ie in DC3-DC5 with L/R ≤ 15ms with 1 poles in series			
	≤24V	A	15
	48V	A	13
	75V	A	13
	110V	A	2
	220V	A	–
IEC max current Ie in DC3-DC5 with L/R ≤ 15ms with 2 poles in series			
	≤24V	A	18
	48V	A	18
	75V	A	16
	110V	A	10
	220V	A	2
IEC max current Ie in DC3-DC5 with L/R ≤ 15ms with 3 poles in series			
	≤24V	A	22
	48V	A	22
	75V	A	18
	110V	A	15
	220V	A	8
IEC max current Ie in DC3-DC5 with L/R ≤ 15ms with 4 poles in series			
	≤24V	A	–
	48V	A	–
	75V	A	–
	110V	A	–
	220V	A	–
Short-time allowable current for 10s (IEC/EN60947-1)		A	200
Protection fuse			
	gG (IEC)	A	50
	aM (IEC)	A	25
Making capacity (RMS value)		A	250
Breaking capacity at voltage			
	440V	A	200
	500V	A	184
	690V	A	102
Resistance per pole (average value)		mΩ	2.5
Power dissipation per pole (average value)			
	Ith	W	2.6
	AC3	W	1.6
Tightening torque for terminals			
	min	Nm	1.5
	max	Nm	1.8
	min	Ibin	1.1
	max	Ibin	1.5
Tightening torque for coil terminal			
	min	Nm	0.8
	max	Nm	1
	min	Ibin	0.8

The characteristics described in this document are subject to updates or modifications at any time. The descriptions, technical and functional information, illustrations and instructions in this brochure are purely illustrative, and are consequently not contractually binding

		max	Ibin	0.74
Max number of wires simultaneously connectable			Nr.	2
Conductor section				
	AWG/Kcmil			
		max		10
	Flexible w/o lug conductor section			
		min	mm²	1
		max	mm²	6
	Flexible c/w lug conductor section			
		min	mm²	1
		max	mm²	4
	Flexible with insulated spade lug conductor section			
		min	mm²	1
		max	mm²	4
Power terminal protection according to IEC/EN 60529				IP20 when properly wired
Mechanical features				
Operating position				
		normal		Vertical plan
		allowable		±30°
Fixing				Screw / DIN rail 35mm
Weight			g	356
Conductor section				
	AWG/kcmil conductor section			
		max		10
Auxiliary contact characteristics				
Thermal current Ith			A	10
IEC/EN 60947-5-1 designation				A600 - P600
Operating current AC15				
		230V	A	3
		400V	A	1.9
		500V	A	1.4
Operating current DC12				
		110V	A	5.7
Operating current DC13				
		24V	A	5.7
		48V	A	2.9
		60V	A	2.3
		110V	A	1.25
		125V	A	1.1
		220V	A	0.55
		600V	A	0.2
Operations				
Mechanical life			cycles	20000000
Electrical life			cycles	1200000
Safety related data				
Performance level B10d according to EN/ISO 13489-1				
		rated load	cycles	1200000
		mechanical load	cycles	20000000
Mirror contats according to IEC/EN 609474-4-1				yes
EMC compatibility				yes
AC coil operating				

The characteristics described in this document are subject to updates or modifications at any time. The descriptions, technical and functional information, illustrations and instructions in this brochure are purely illustrative, and are consequently not contractually binding

Rated AC voltage at 60Hz			V	120
AC operating voltage				
	of 60Hz coil powered at 60Hz			
		pick-up		
			min	%Us 80
			max	%Us 110
		drop-out		
			min	%Us 20
			max	%Us 55
AC average coil consumption at 20°C				
	of 60Hz coil powered at 60Hz			
			in-rush	VA 75
			holding	VA 9
Dissipation at holding ≤20°C 50Hz				W 2.5
Max cycles frequency				
Mechanical operation				cycles/h 3600
Operating times				
Average time for Us control				
	in AC			
		Closing NO		
			min	ms 8
			max	ms 24
		Opening NO		
			min	ms 10
			max	ms 20
		Closing NC		
			min	ms 14
			max	ms 28
		Opening NC		
			min	ms 7
			max	ms 18
UL technical data				
Full-load current (FLA) for three-phase AC motor				
			at 480V	A 21
			at 600V	A 17
Yielded mechanical performance				
	for single-phase AC motor			
			110/120V	HP 2
			230V	HP 3
	for three-phase AC motor			
			200/208V	HP 7.5
			220/230V	HP 7.5
			460/480V	HP 15
			575/600V	HP 15
General USE				
	Contactor			
			AC current	A 32
	Auxiliary contacts			
			AC voltage	V 600
			AC current	A 10
			DC voltage	V 250
			DC current	A 1
Short-circuit protection fuse, 600V				
	High fault			

The characteristics described in this document are subject to updates or modifications at any time. The descriptions, technical and functional information, illustrations and instructions in this brochure are purely illustrative, and are consequently not contractually binding

		Short circuit current	kA	100
		Fuse rating	A	60
		Fuse class		J
	Standard fault			
		Short circuit current	kA	5
		Fuse rating	A	100
Contact rating of auxiliary contacts according to UL				A600 - P600
Ambient conditions				
Temperature				
	Operating temperature			
		min	°C	-50
		max	°C	70
	Storage temperature			
		min	°C	-60
		max	°C	80
Max altitude			m	3000
Resistance & Protection				
Pollution degree				3

Dimensions

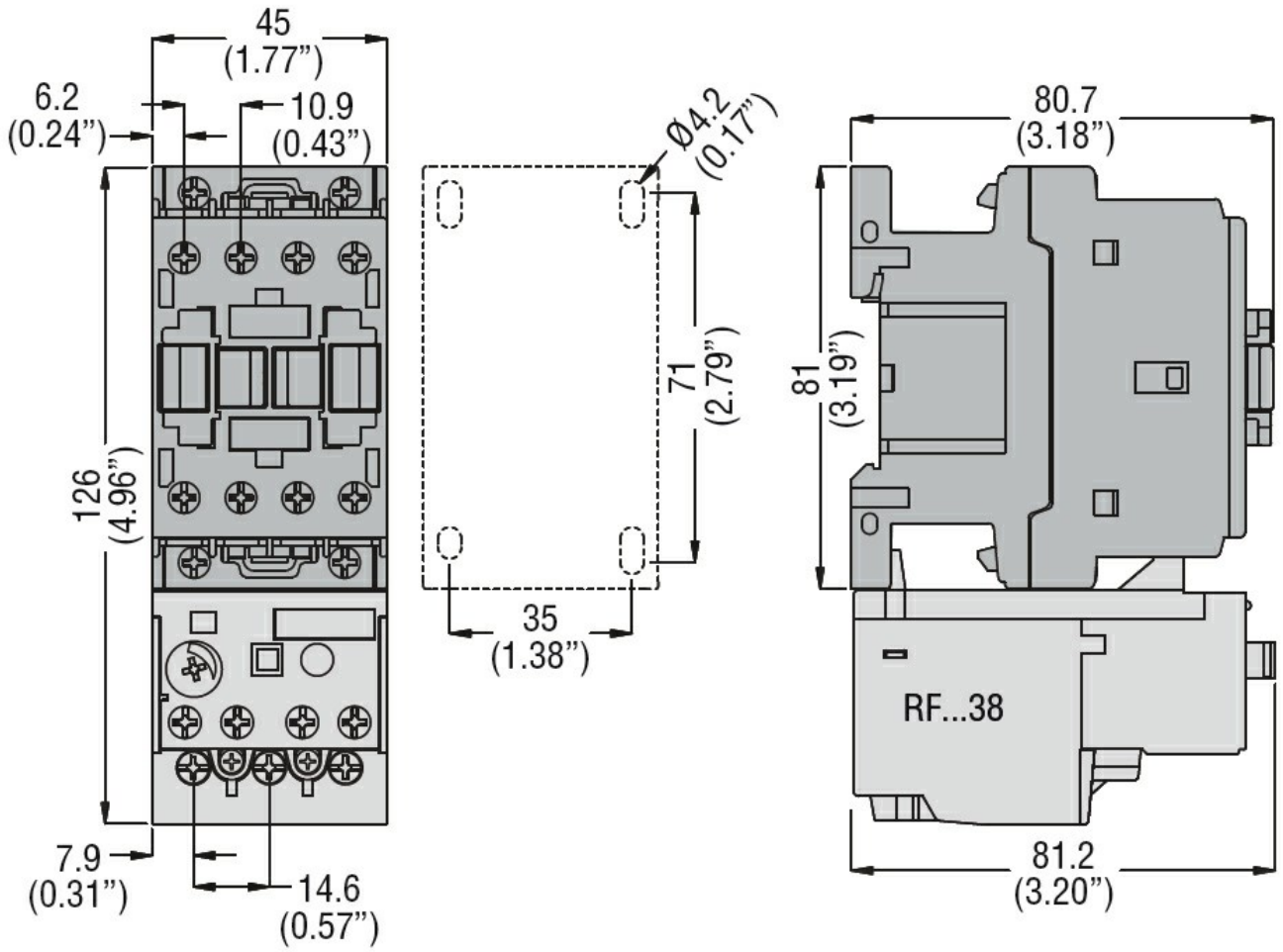

Wiring diagrams

The characteristics described in this document are subject to updates or modifications at any time. The descriptions, technical and functional information, illustrations and instructions in this brochure are purely illustrative, and are consequently not contractually binding

BF2510A12060

THREE-POLE CONTACTOR, IEC OPERATING CURRENT IE (AC3) = 25A, AC COIL 60HZ, 120VAC, 1NO AUXILIARY CONTACT

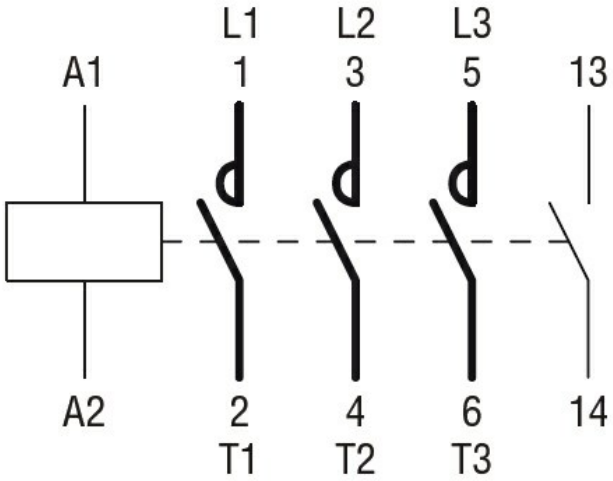

Certifications and compliance

Compliance

CSA C22.2 n° 60947-1
CSA C22.2 n° 60947-4-1
IEC/EN/BS 60947-1
IEC/EN/BS 60947-4-1
UL 60947-1
UL 60947-4-1

Certificates

CCC
cULus
EAC

ETIM classification

ETIM 8.0	EC000066 - Power contactor, AC switching

The characteristics described in this document are subject to updates or modifications at any time. The descriptions, technical and functional information, illustrations and instructions in this brochure are purely illustrative, and are consequently not contractually binding