IP series

Momentary pushbutton switches for harsh environments

Distinctive features and specifications



- ❑ **Illuminated and non-illuminated**
- ❑ **Tactile feedback**
- ❑ **Wide variety of configurations**
- ❑ **Sealed to IP 67**

B

ENVIRONMENTAL SPECIFICATIONS

- Degree of protection : IP 67
- Shock resistance : 100 g according to IEC 512-4, test 6c
- Vibration resistance : 10-500Hz - 10 g according to IEC 512-4, test 6d
- Salt spray : IEC 512-6, test 11f
- Robustness (non-illuminated sw.) : IK06 according to EN 50102 (1 joule)
- Operating temperature : -40°C to +125°C

ELECTRICAL SPECIFICATIONS

- Max. current/voltage rating with resistive load : 500mA 48VAC - 200mA 50VDC - 200mA 250VAC
- Initial contact resistance : 50 mΩ max.
- Insulation resistance : 1 GΩ min. at 500VDC
- Dielectric strength : 1.500 VAC rms
- Electrical life at full load : 500.000 cycles
- Contact bounce : 10 ms

LED COMPONENT SPECIFICATIONS			
LED colour	Forward current	Forward Voltage	Max. lumin. intensity
Super red (L0S)	20mA	2V	125 mcd
Yellow (L0Y)	20mA	2V	125 mcd
Green (L0G)	10mA	2V	20 mcd
Blue (L0B)	10mA	3,5V	20 mcd
White (L0W)	20mA	3,5V	280 mcd

A resistor must be series-connected by the user.

Resistor value = $\frac{\text{supply voltage - LED forward voltage}}{\text{LED forward current}}$

GENERAL SPECIFICATIONS

- Panel thickness : 1,5 mm (.059) min. 4 mm (.157 max.)
- Total travel : 1,5 mm (.059)
- Operating force : 2N to 5N
- Mechanical life : 1.000.000 cycles
- Torque : 1,5 Nm max. applied to nut
- Soldering : 320°C max. for 3 sec.

MATERIALS

- Case : thermoplastic UL94-V0
- Plunger : polyamide 6/6
- Bushing/bezel : zinc die-cast (zamac), black painted
- Contacts : silver, gold plated
- Multi-wire lead AWG20, section 0,6 mm², UL approved
- LED wire : AWG26
- Lens : polycarbonate
- Terminal seal : epoxy

IP series

Momentary pushbutton switches for harsh environments

Overview

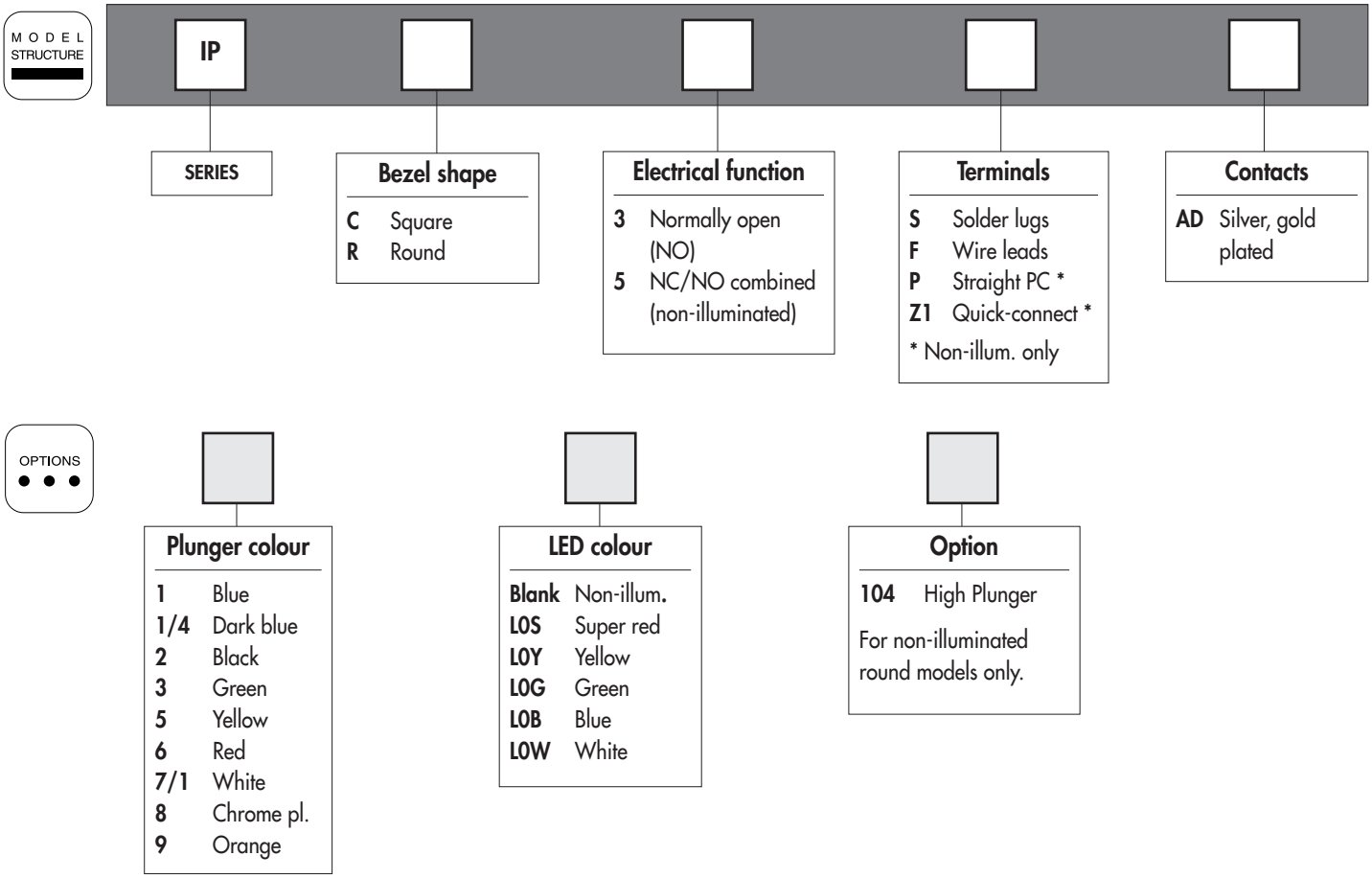

B

ABOUT THIS SERIES
On the following pages, you will find successively :
model structure of switches and options in the same order as in above chart

Dimensions : first dimensions are in mm while inches are shown as bracketted numbers.

NOTICE : please note that not all combinations of above numbers are available.
Refer to the following pages for further information.

A sealing boot is available to protect the switches against frost and sand. It is presented at the end of the series and in section H.

Mounting accessories : Standard hardware supplied : 1 hex nut 14 mm (.551) across flats and 1 O-ring.
The hex nut is presented in section I (part number U166).

Packaging unit : 25 pieces

IP series

Momentary pushbutton switches for harsh environments

Square - illuminated

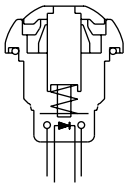

- High brightness illumination
- Five LED colours
- Tin plated LED terminals

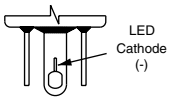

B

MODEL STRUCTURE

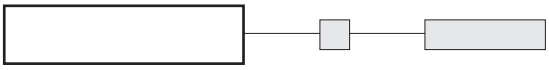

Solder lug terminals



IPC3SAD



Normally Open

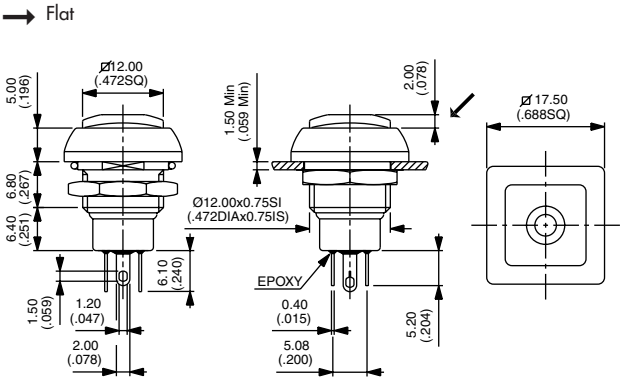

Sealed wire lead terminals



IPC3FAD



Normally Open

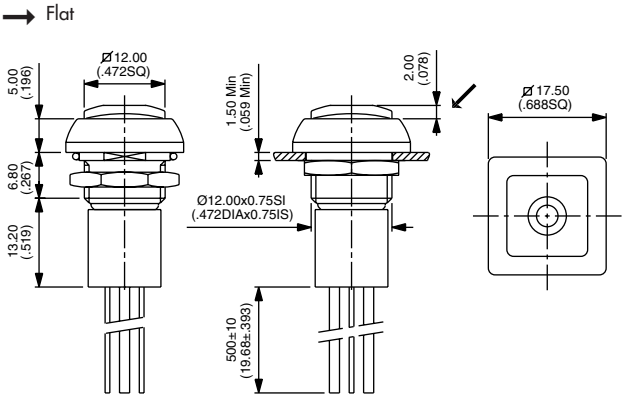

Wire colours : black : NO contact, red : LED anode(+), blue : LED cathode(-)

PLUNGER COLOUR

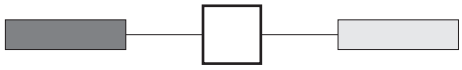

1 : blue - **1/4** : dark blue - **2** : black - **3** : green - **5** : yellow - **6** : red - **7/1** : white - **8** : chrome plated - **9** : orange

LED COLOUR

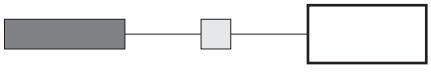

L0S : super red - **L0Y** : yellow - **L0G** : green - **L0B** : blue - **LOW** : white

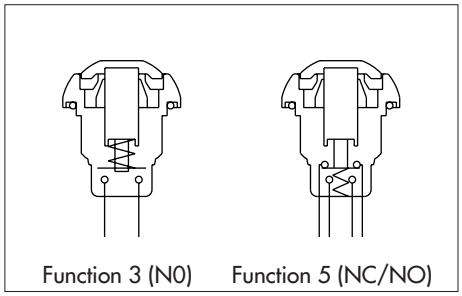

- Double function (NC/NO combined) with a short behind-panel depth

Straight **P** Quick-connect **Z1**

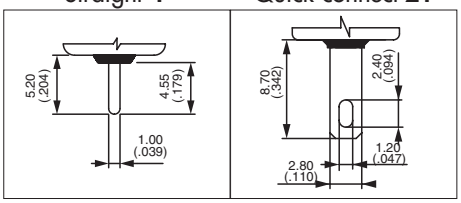

MODEL STRUCTURE

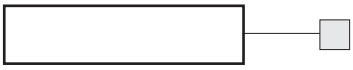

Solder lug terminals



IPC3SAD Normally Open

IPC5SAD NC/NO combined

→ Flat

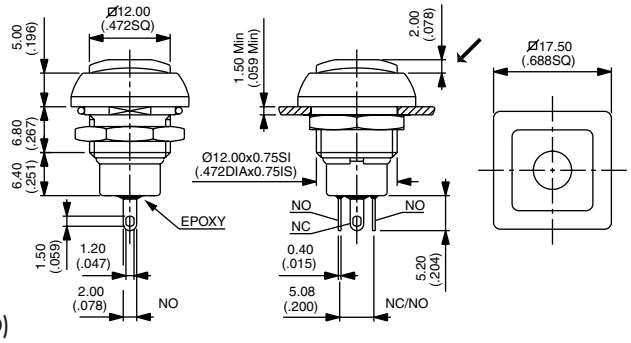

Also available with straight PC terminals : **IPC3PAD** (NO) or **IPC5PAD** (NC/NO) and quick-connect terminals : **IPC3Z1AD** (NO only)

Sealed wire lead terminals



IPC3FAD Normally Open

IPC5FAD NC/NO combined

→ Flat

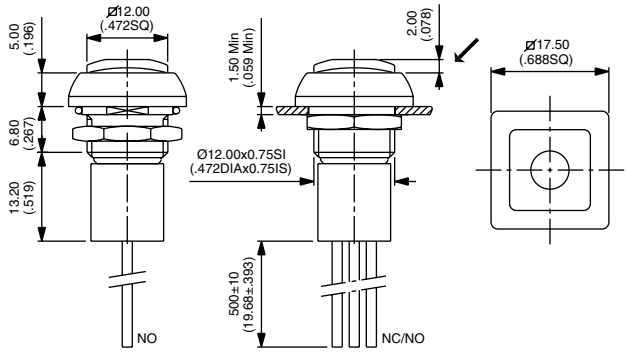

Wire colours (NC/NO) : black : NO, blue : NC

PLUNGER COLOUR

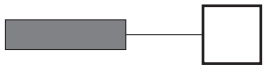

1 : blue - **1/4** : dark blue -**2** : black - **3** : green - **5** : yellow - **6** : red - **7/1** : white - **8** : chrome plated - **9** : orange

IP series

Momentary pushbutton switches for harsh environments

Round - illuminated

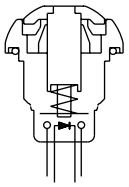

- High brightness illumination
- Five LED colours
- Tin plated LED terminals

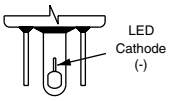

MODEL STRUCTURE

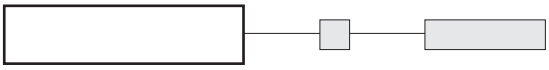

B

Solder lug terminals



IPR3SAD



Normally Open

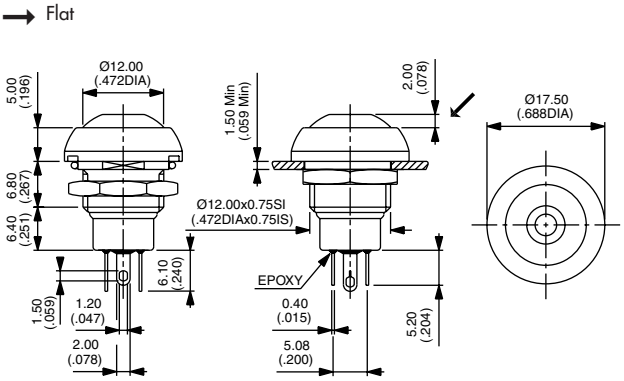

Sealed wire lead terminals



IPR3FAD



Normally Open

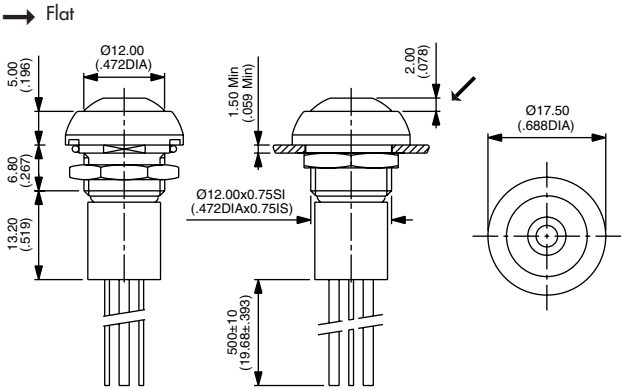

Wire colours : black : NO contact, red : LED anode(+), blue : LED cathode(-)

PLUNGER COLOUR

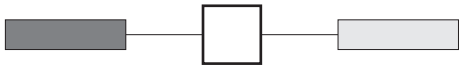

1 : blue - **1/4** : dark blue - **2** : black - **3** : green - **5** : yellow - **6** : red - **7/1** : white - **8** : chrome plated - **9** : orange

LED COLOUR

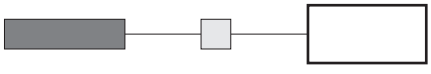

L0S : super red - **L0Y** : yellow - **L0G** : green - **L0B** : blue - **L0W** : white

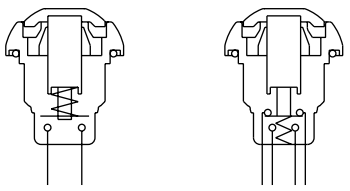

- Double function (NC/NO combined) with a short behind-panel depth

Straight **P**

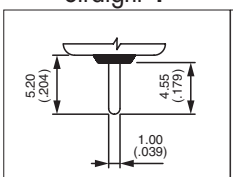

Quick-connect **Z1**

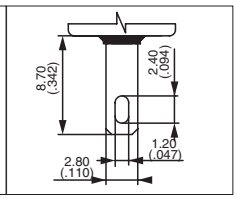

MODEL STRUCTURE

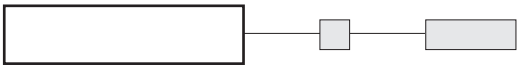

B

Solder lug terminals



IPR3SAD Normally Open

IPR5SAD NC/NO combined

→ Flat

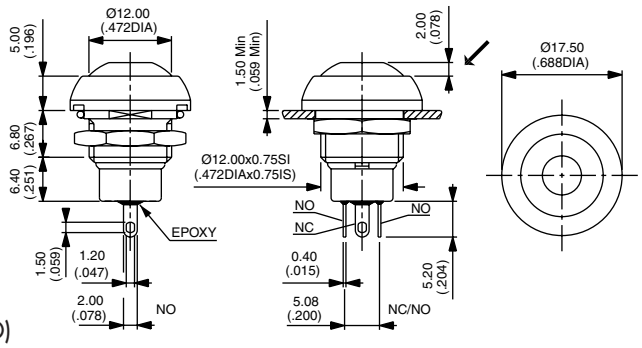

Also available with straight PC terminals : **IPR3PAD** (NO) or **IPR5PAD** (NC/NO) and quick-connect terminals : **IPR3Z1AD** (NO only)

Sealed wire lead terminals



IPR3FAD Normally Open

IPR5FAD NC/NO combined

→ Flat

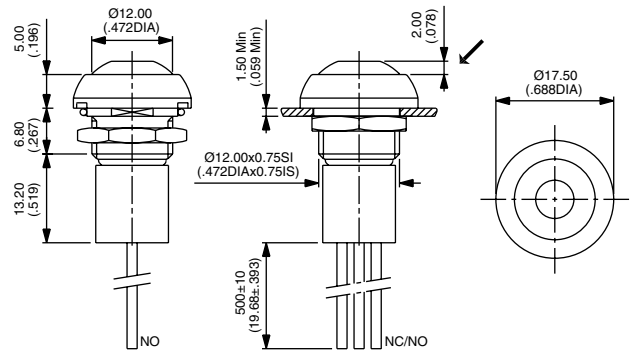

Wire colours (NC/NO) : black : NO, blue : NC

PLUNGER COLOUR

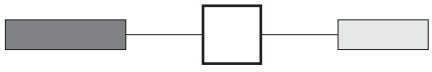

1 : blue - **1/4** : dark blue -**2** : black - **3** : green - **5** : yellow - **6** : red - **7/1** : white - **8** : chrome plated - **9** : orange

PLUNGER OPTION

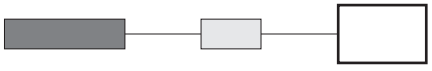

104 : High plunger

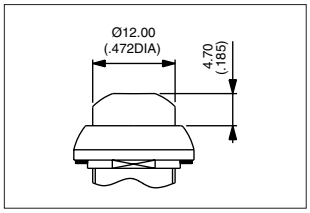

IP series

Momentary pushbutton switches for harsh environments

MOUNTING

Panel cut-out

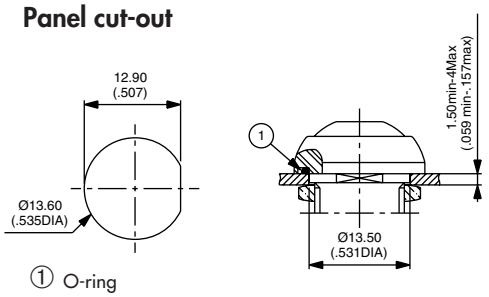

① O-ring

Matrix mounting

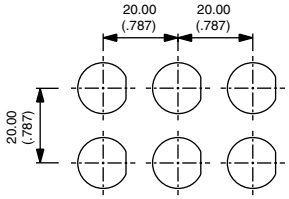

Back of panel space requirement

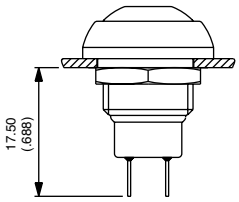

B

TACTILE FEEDBACK

Operating forces/ travels diagram
(indicative nominal curve)

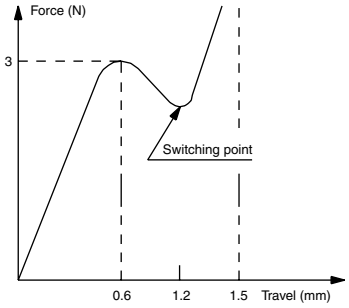

Cross section

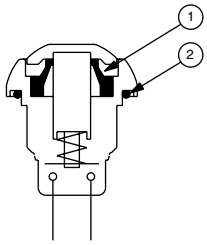

① Elastomeric membrane ② O-ring

SEALING

IP 67 for the whole series

Degree of protection provided by the enclosures of electric appliances according to IEC 529, DIN 40050 and NFC 20-010.

IP (ingress protection)	**6** Totally protected against dust	**7** Protected against the effects of immersion up to 1 m water (30 mn)
SOLDER LUG VERSION	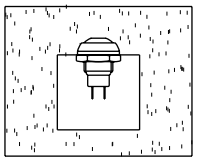	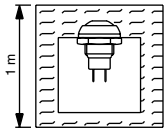
WIRE LEAD VERSION	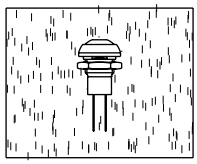	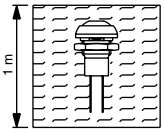

The above illustrations show non-illuminated models.

LUMINANCE MEASUREMENT MODE

TEST RESULTS *		
Led types	Luminance	Forward current
L0S (super red)	4000 Cd/m²	20mA
L0Y (yellow)	3500 Cd/m²	20mA
L0G (green)	400 Cd/m²	10mA

* in our lab conditions

For blue and white Led, consult factory.

Test conditions

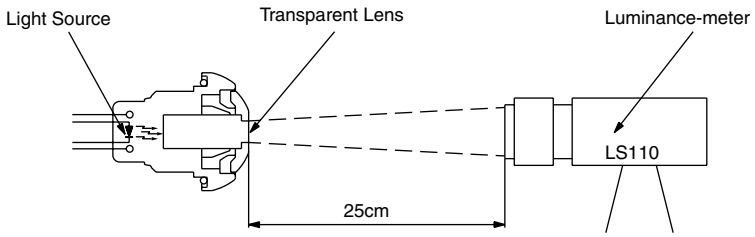

Measured in a dark room

ADDITIONAL SEALING

For ROUND plungers only, illuminated or non-illuminated.

By transparent silicone overboot U5125 for protection against frost and abrasion by sand. Order separately.

Operating temperature : -40°C to +125°C.

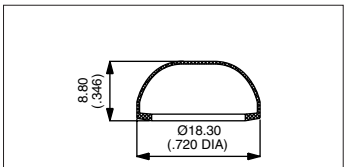

U5125

