Kobra - Tongue Switches with Guard Locking - Type KLM-P2L

KLM-P2L Power to Lock Operating Instructions



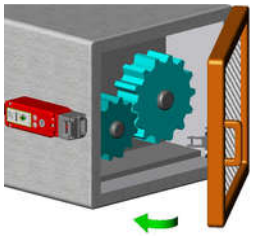

Hinged Guard

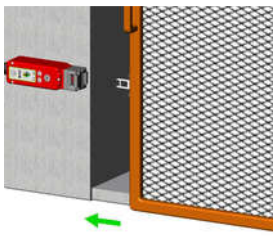

Sliding Guard

Application:

Tongue operated Solenoid Interlock switches are designed to fit to the leading edge of sliding, hinged or lift off machine guards to provide positively operated switching contacts and provide a tamper resistant key mechanism.
They are designed to provide robust position interlock detection for moving guards and will remain locked until the solenoid voltage is removed from the switch.
They are not suitable for machines with a running down time.
They provide robust holding up to 2000N.

Operation:

The switch is rigidly mounted to the frame of the guard or machine. The actuator is fitted to the moving part (frame) of the guard and is aligned to the switch entry aperture. The actuator profile is designed to match a cam mechanism within the switch head and provides a positively operated not easily defeatable interlock switch. When the actuator is inserted into the switch the safety contacts will close only when power is applied to the solenoid. This will then allow the machine start circuit to be enabled. When the solenoid power is removed the safety contacts are opened and the machine circuit is broken.

Installation:

1. Installation of all IDEM interlock switches must be in accordance with a risk assessment for the individual application.
   Installation must only be carried out by competent personnel and in accordance with these instructions.

2. M5 mounting bolts must be used to fix the switch and actuator, the tightening torque to ensure reliable fixing is 4.0 Nm.
   Tightening torque for the lid screws, conduit entry plugs and cable glands must be 1.5 Nm to ensure IP seal.
   Only use the correct size gland for the conduit entry and cable outside diameter.
   Tightening torque for the connection terminal screws is 0.7 Nm, max conductor size is 1.0 sq.mm.
   The switch head position can be selected by loosening the 4 head bolts and then rotating to the position required.
   Tightening torque for the head bolts is1.5Nm.

3. Always fit a mechanical stop to the guard to prevent damage to the front of the switch.
   Set the actuator gap to 3mm when the guard is closed and against the stop,(See Fig.A).
   Use alignment guides to ensure that the actuator enters the switch without interfering with the sides of the aperture.
   Always fit the aperture plug to the unused entry aperture to prevent debris entering the switch mechanism.

4. **Always use the circuits 11-12 and 21-22 to ensure monitoring of the lock.**

5. After installation check operation of all control circuits and the locking function.
   LED 1 will illuminate when power is applied to A1 and A2 (solenoid feed).

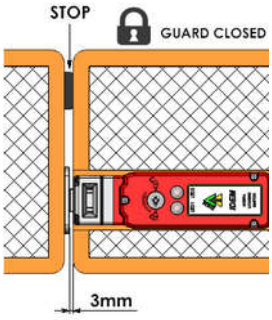

Fig. A

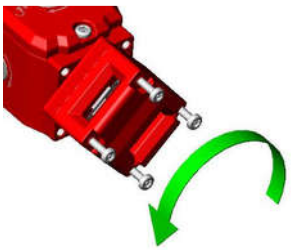

8 actuator entry positions
rotatable head

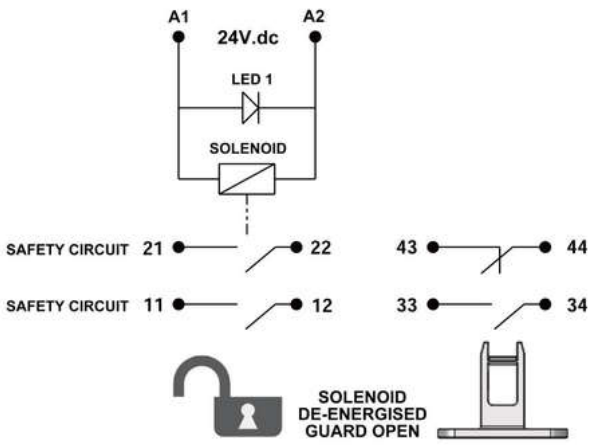

Maintenance:

Every Week: Check correct operation of all circuits and the Lock function.
If the actuator shows signs of bending or the switch head housing displays mechanical damage then remove and replace.
IDEM will not accept responsibility for failure of the switch functions if the installation and maintenance requirements shown in this sheet are not implemented.
These requirements form part of the product warranty.

Every 6 Months: Isolate power and remove cover. Check screw terminal tightness and check for signs of moisture ingress. Never attempt to repair any switch.

THESE INSTRUCTIONS FORM PART OF THE PRODUCT WARRANTY.

Kobra - Tongue Switches with Guard Locking - Type KLM-P2L

Internal Terminal Connections:

A1 0V dc
A2 24V.dc

11-12 Safety Circuit 1 - **(must always be used)**

21-22 Safety Circuit 2

33-34 Signal Circuit Guard - (Closed when Guard is closed)

43-44 Signal Circuit Guard - (Closed when Guard is open)

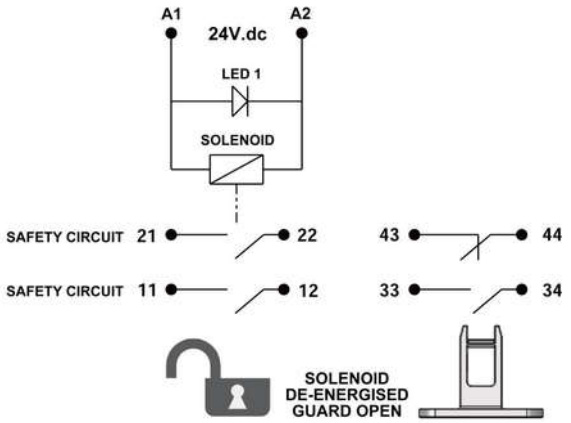

LED Function:

Green Solenoid Energised

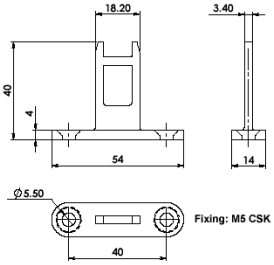

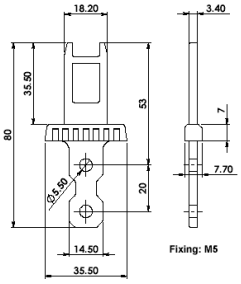

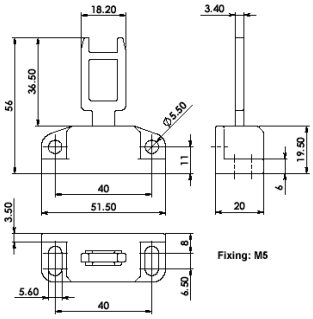

Actuator insertion:

6.0 5 0mm

11/12	Open		Solenoid energised
21/22	Open		Solenoid energised
33/34	Open		Tongue Inserted
43/44		Open	Tongue Inserted

Standards:	EN1088, IEC 60947-5-1, UL508
Solenoid Voltage	24V dc
Solenoid consumption – Turn on current	1.2 A.
Running current	0.3A.
Safety Contacts 11-12 21-22	
Utilization Category	AC15 A300 3A.
Thermal Current (Ith)	10A
Rated Insulation Voltage	600VAC
Rated Impulse Withstand Volt	2500VAC
Signal Contacts 33-34 43-44	24V 200mA max.
Travel for Positive Opening	10mm
Man. Actuation Frequency	2 cycle/sec
Actuator entry minimum radius	175mm
Case Material	Die Cast
Actuator Material	Stainless steel
Enclosure Protection	IP67
Operating Temperature	-25°C to 40°C
Mechanical Life Expectancy	1 x 10^6 Cycle min.
Vibration	IEC 68-2-6, 10-55Hz+1Hz, Excursion: 0.35mm, 1 octave/min
Conduit Entry	M20 or ½" NPT (by Part Number)
Fixing	4 x M5

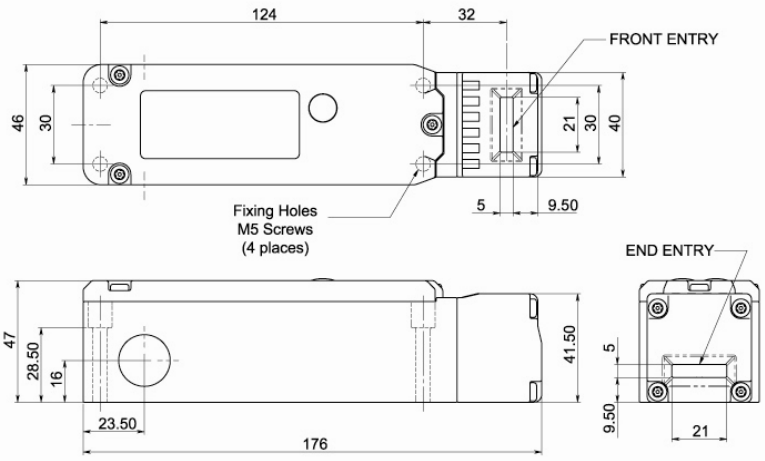

Information with regard to UL 508:
Type 1 Enclosures.
Use 12AWG copper conductors only.
Intended for same polarity use and one polymeric conduit connection.
Electrical Rating: A300. 48W5.
Max. Switching Current / Volt / Amp:
120V. 6A. (720VA break) PF 0.38
240V. 3A. (720VA break) PF 0.38

IDEM SAFETY SWITCHES Ltd., 2 Ormside Close, Hindley Industrial Estate, Hindley Green, Wigan, WN2 4HR UK. Tel: +44 (0)1942 257070 Fax.: +44 (0)1942 257076
IDEM (USA) 4075 Papazian Way, Suite 105, Fremont, CA 94538 Tel:510-445-0751 Fax:1866-431-7064 email: sales@idemsafety.com Web: www.idemsafety.com

Doc: 102528
June 2012