OA0107

Retro-reflective sensor

OAP-FKOA/T

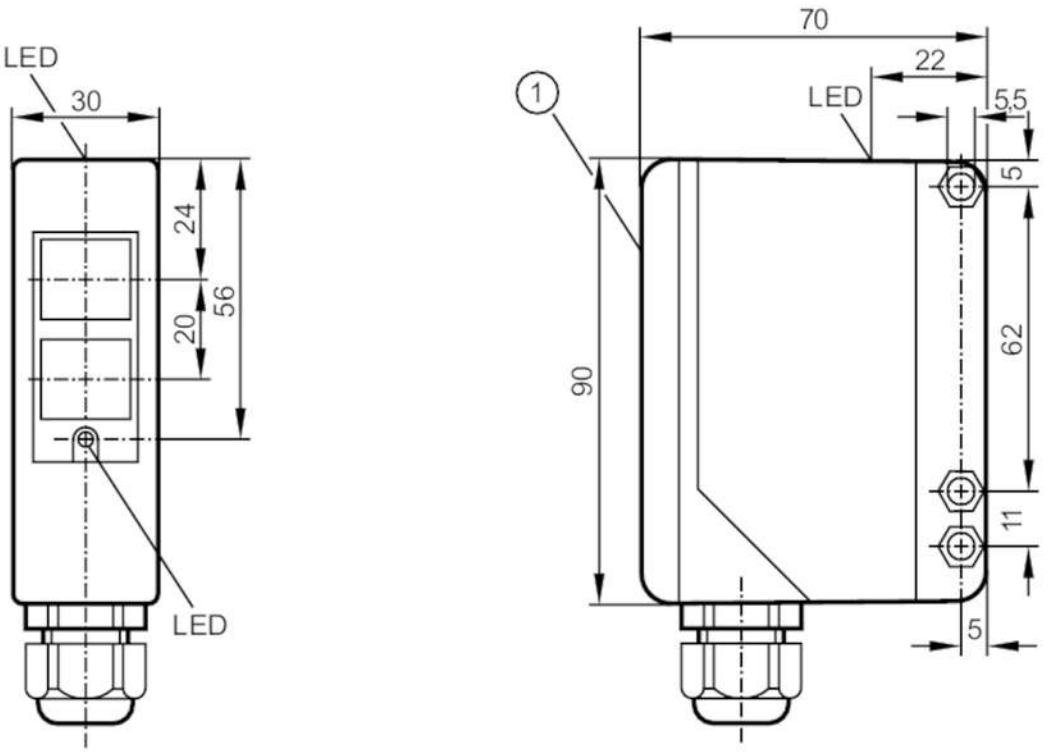

1 selection switch and potentiometer under cover
receiver in upper lens
transmitter in lower lens

Product characteristics		
Type of light		red light
Housing		rectangular
Application		
Special feature		polarisation filter
Function principle		Retro-reflective sensor
Electrical data		
Frequency AC	[Hz]	47...63
Operating voltage	[V]	20...250 AC/DC
Max. power consumption	[VA]	2
Protection class		II
Reverse polarity protection		no
Type of light		red light
Wave length	[nm]	660
Outputs		
Electrical design		relay
Output function		light-on/dark-on mode; (programmable)
Contact rating		250 V AC / 3 A / 360 VA, 125 V DC / 3 A / 30 W
Short-circuit proof		no

OA0107

Retro-reflective sensor

OAP-FKOA/T

Overload protection		no	
Time function	[s]	0.5...10	
Detection zone			
Range referred to prismatic reflector	[m]	0.2...8; (Prismatic reflector Ø 80 E20005)	
Range adjustable		yes	
Max. light spot diameter	[mm]	420	
Light spot dimensions refer to		at maximum range	
Polarisation filter available		yes	
Operating conditions			
Ambient temperature	[°C]	-25...60	
Protection		IP 65	
Tests / approvals			
EMC		EN 60947-5-2	
		EN 55011	class B
MTTF	[years]	264	
Mechanical data			
Weight	[g]	305	
Housing		rectangular	
Dimensions	[mm]	90 x 30 x 70	
Materials		PPO modified	
Lens material		PMMA	
Lens alignment		side lens	
Displays / operating elements			
Display		switching status	1 x LED, yellow
		operation	1 x LED, green
		function	1 x LED, red
Operating elements			on-delay or off-delay selectable via slide switch
Electrical connection			
Required protection		miniature fuse to IEC60127-2 sheet 1; ≤ 5 A; fast acting	
Accessories			
Items supplied		Angle bracket: 1, E20514	
		screwdrivers	
Remarks			
Remarks		Recommendation: Check the safe functioning of the unit after a short circuit.	
Pack quantity		1 pcs.	

OA0107

Retro-reflective sensor

OAP-FKOA/T

Electrical connection

terminals: ...1.5 mm²; Cable sheath: Ø 4.5...10 mm; Cable gland: M16 X 1.5

Connection

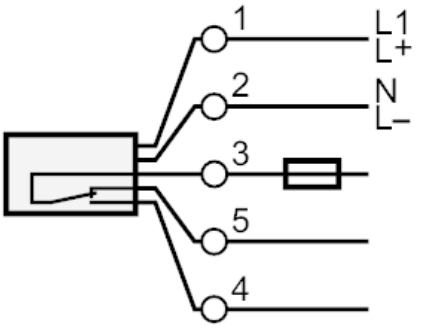

Note : miniature fuse to IEC60127-2 sheet 1 ≤ 5 A fast acting

Diagrams and graphs

excess gain graph

