OU5036

Retro-reflective sensor

OUR-DPKG/US-100-DPS

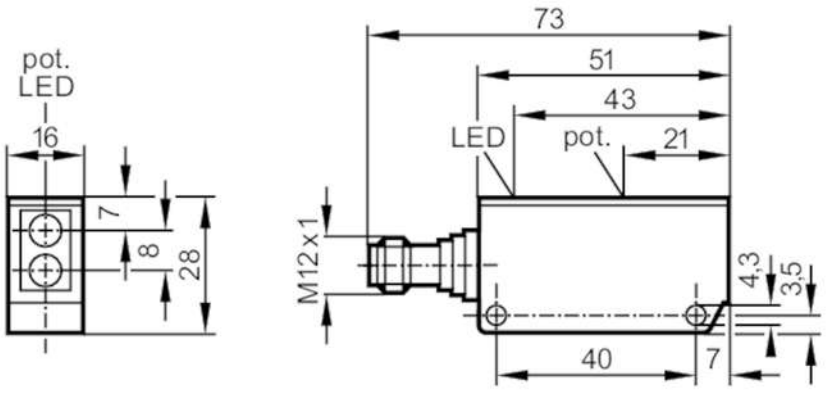

receiver in upper lens
transmitter in lower lens

Product characteristics		
Type of light		infrared light
Housing		rectangular
Application		
Function principle		Retro-reflective sensor
Electrical data		
Operating voltage	[V]	10...55 DC
Current consumption	[mA]	35; ((24 V))
Protection class		III
Reverse polarity protection		yes
Type of light		infrared light
Wave length	[nm]	880
Outputs		
Electrical design		PNP
Output function		dark-on mode
Max. voltage drop switching output DC	[V]	2.5
Permanent current rating of switching output DC	[mA]	250
Switching frequency DC	[Hz]	160
Short-circuit protection		yes
Type of short-circuit protection		pulsed
Overload protection		yes
Detection zone		
Range referred to prismatic reflector	[m]	0.15...3; (Prismatic reflector Ø 80 E20005)
Range adjustable		yes
Max. light spot diameter	[mm]	262
Light spot dimensions refer to		at maximum range

OU5036

Retro-reflective sensor

OUR-DPKG/US-100-DPS

Operating conditions			
Ambient temperature	[°C]	-25...80	
Protection		IP 67	
Tests / approvals			
EMC		EN 60947-5-2	
MTTF	[years]	694	
Mechanical data			
Weight	[g]	75	
Housing		rectangular	
Dimensions	[mm]	28 x 16 x 51	
Materials		PPO modified	
Lens material		glass	
Lens alignment		side lens	
Displays / operating elements			
Display		switching status	1 x LED, yellow
Accessories			
Items supplied		Angle bracket: 1, E20211	
Remarks			
Pack quantity		1 pcs.	

Electrical connection

Connector: 1 x M12; coding: A



Connection

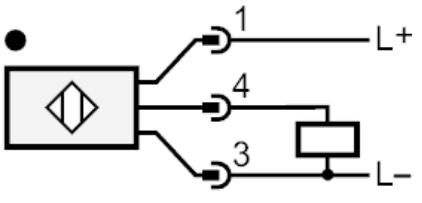

OU5036

Retro-reflective sensor

OUR-DPKG/US-100-DPS

Diagrams and graphs

excess gain graph

