The 339B is a solid-state TDR with octal plug-in base that maintains excellent repeat accuracy despite wide voltage and temperature variations even after long periods of down-time. The 339B has six dial selected ranges from fractions of a second to as long as 10 hours and selectable on-delay or interval timing modes. Fixed timing units are available upon request.

WIDE CHOICE OF RANGES: In addition to the short ranges expected of an electronic TDR, the 339 is also available with ranges as long as 10 hours. An unusually versatile timer, the 339 has six dial-selected ranges—from 0.3 seconds to 3 hours or 1 second to 10 hours—and provides dial-adjustable timing periods between 0.075 seconds and 10 hours. A single 339 model thus accommodates the needs of a wide range of applications, allowing the user to select easily and precisely—an appropriate range to permit optimum setting accuracy. The dial face automatically displays the selected range.

CYCLE PROGRESS INDICATION: The 339's LED annunciator provides a unique and effective method of cycle progress indication. Off before timing, the LED blinks at an ever-increasing rate as the cycle progresses; once every 3-1/2 seconds during the first 10% of the cycle, twice during the second 10%, and so on. At time-out, the LED stays on constantly, pulsing at a high rate. (In the 1 and 10-second ranges, the LED is off before timing, steady on during timing, and pulsing on after time-out.)

HIGH ACCURACY: The 339's timing circuit is not a simple RC circuit, but includes counting technology along with a stable oscillator to provide repeatable time delays.

MULTIPLE TIMING MODES: Every 339 can be used for either on-delay or interval timing operation. The timing mode is selectable by a switch on the 339 housing.

E48329

APPROVED



Plug-In Adjustable Time Delay Relay

OPERATION

Timing begins when the start switch is closed. This starts an oscillator which runs at a frequency determined by the time setting. A fixed number of counts from the oscillator determines the end of the time cycle. The time required to accomplish this depends on the oscillator frequency. During timing, a LED located on the dial face blinks. For the first ten percent of the cycle, the LED repeatedly blinks once followed by a pause, for the second 10%, it blinks twice and so on indicating the cycle progress. It flashes rapidly and continuously after time out.

ON-DELAY MODE: At time out, the built-in relay transfers its contacts. These contacts remain transferred until the start switch is opened or power is removed by some other means. The 339 then resets and is ready for another cycle.

INTERVAL MODE: When timing begins, the built-in relay transfers its contacts. The contacts remain transferred until time out. The timer will not start again until the start switch is opened or power is removed by some other means. The 339 then resets and is ready for another cycle.

MODEL NUMBER

MODEL NUMBER	339B				
RANGE					
Six dial-selected ranges (.3 or 3 SEC, MIN, HR)	359				
Six dial-selected ranges (1 or 10 SEC, MIN, HR)	200				
VOLTAGE & FREQUENCY					
120 VAC, 50/60 Hz		Q			
240 VAC, 50/60 Hz		R			
24 VAC, 50/60 Hz, 24 VDC		T			
12 VDC		E			
ARRANGEMENT					
ON-Delay, Interval Mode			2		
Special			0		
FEATURES					
Standard					X
Special					K

ACCESSORIES

8-Pin surface/DIN rail socket	000-825-85-00
Hold down for above socket (2 required)	339-025-03-00
Plug-in socket kit (8-pin)	319-261-45-00

WIRING

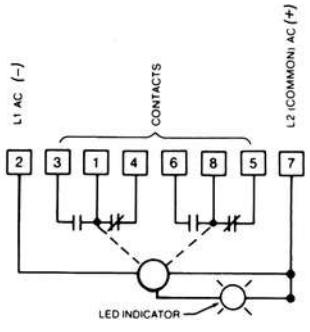

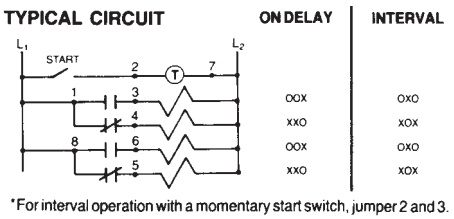

*For interval operation with a momentary start switch, jumper 2 and 3.

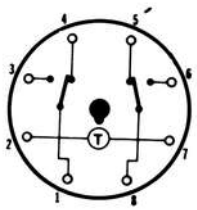

TERMINAL WIRING

SPECIFICATIONS

MODELS	Choice of two multi-range units. All models operate in on-delay or interval mode.	
RANGES	Choice of two models	
	Six dial-selected ranges:1.0 and 10 SEC, MIN, HR or 0.3 and 3 SEC, MIN, HR	
MINIMUM SETTING	3% of range, except 75 mSEC on 0.3 SEC and 1.0 SEC ranges.	
LOAD RELAY	TYPE	DPDT 10 AMPS resistive at 30 VDC or 250 VAC (or less) 1/8 HP @120 VAC
	LIFE	10 million operations with no load 100,000 operations with:10 AMPS at 30 VDC (or less) or 10 AMPS at 250 VAC (or less)
	CONTACT MATERIAL	Silver Nickel
TEMPERATURE RATING	0° to 140°F (-17° to 60°C)	
MOUNTING	Plug-in octal base; mounts in any position with retaining clips.	
	OPTIONS:	Surface mounting socket DIN rail mounting socket Panel-mounting adapter kit Plug-on socket Rear facing terminal socket.
POWER REQUIREMENTS	120 VAC	95 - 132 VAC,50/60Hz Inrush - .4A Running - .025
	240 VAC	190 - 264 VAC, 50/60 Hz Inrush - .2A Running - .013A
	24 VAC/DC	19.2 - 26.4 VAC/DC Inrush - .4A Running - .075A
	12 VDC	9.6 - 13.2 VDC Inrush - .25A Running - .10A
REPEAT ACCURACY	Varies as a function of line voltage and temperature but not of reset time	
	a	±0.5% at constant temperature and voltage. (or ±15 mSEC whichever is greater)
	b	± 1%* at constant voltage and full temperature range. (or ± 25 mSEC whichever is greater)
	c	± 1.5%* at constant temperature and full voltage range. (or ± 25 mSEC whichever is greater)
	d	± 2%* over full voltage and temperature range. (or ± 30 mSEC, whichever is greater)
	*Variations of line voltage must be within 95 and 132V; of temperature between -17° and 60°C (0° and 140°F)	
RECYCLE CHARACTERISTICS	The timer can be used as a pulse generator with L1 power wired though its NC contacts. The pulse will be 35 mSEC to 90 mSEC long.(40 mSEC typical pulse.)	
	a	0 to 20 mSEC power interruption; Guaranteed no reset.
	b	20 mSEC to 90 mSEC; it may reset.(40 mSEC typical reset).
	c	Over 90 mSEC guaranteed to reset. The TDR will reset properly and not start timing when subjected to an open start switch leakage of 1.5 mA or less. (Prox switch and Triac drive applications)
WEIGHT	2.5 oz. (70 g)	

DIMENSIONS (INCHES/MILLIMETERS)

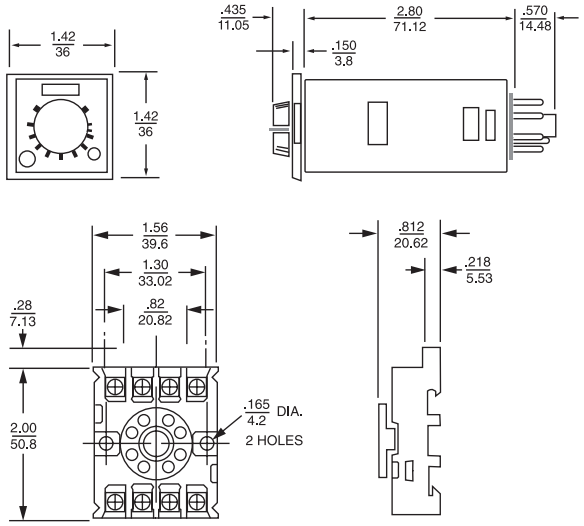

8 PIN OPTIONAL OCTAL
SOCKET NO. 00008258500

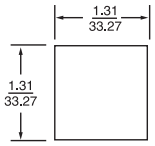

CUTOUT

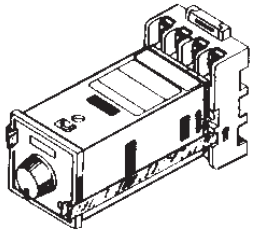

00008258500 SOCKET
WITH 339-025-03-00
HOLD DOWNS