BF95T4A048

FOUR-POLE CONTACTOR, IEC OPERATING CURRENT ITH (AC1) = 140A, AC COIL 50/60HZ, 48VAC



Product designation			Power contactor
Product type designation			BF95
Contact characteristics			
Number of poles		Nr.	4
Rated insulation voltage Ui IEC/EN		V	1000
Rated impulse withstand voltage Uimp		kV	8
Operational frequency			
	min	Hz	25
	max	Hz	400
IEC Conventional free air thermal current Ith		A	140
Operational current Ie			
	AC-1 (≤40°C)	A	140
	AC-1 (≤55°C)	A	115
	AC-1 (≤70°C)	A	100
	AC-3 (≤440V ≤55°C)	A	95
	AC-4 (400V)	A	45
IEC max current Ie in DC1 with L/R ≤ 1ms with 1 poles in series			
	≤24V	A	140
	48V	A	140
	75V	A	100
	110V	A	10
	220V	A	–
IEC max current Ie in DC1 with L/R ≤ 1ms with 2 poles in series			
	≤24V	A	140
	48V	A	140
	75V	A	140
	110V	A	110
	220V	A	12
IEC max current Ie in DC1 with L/R ≤ 1ms with 3 poles in series			
	≤24V	A	140
	48V	A	140
	75V	A	155
	110V	A	120
	220V	A	125
IEC max current Ie in DC1 with L/R ≤ 1ms with 4 poles in series			
	≤24V	A	140
	48V	A	140
	75V	A	155
	110V	A	140
	220V	A	140
IEC max current Ie in DC3-DC5 with L/R ≤ 15ms with 1 poles in series			
	≤24V	A	140
	48V	A	44
	75V	A	36
	110V	A	6

The characteristics described in this document are subject to updates or modifications at any time. The descriptions, technical and functional information, illustrations and instructions in this brochure are purely illustrative, and are consequently not contractually binding

	220V	A	–
IEC max current Ie in DC3-DC5 with L/R ≤ 15ms with 2 poles in series			
	≤24V	A	140
	48V	A	63
	75V	A	60
	110V	A	55
	220V	A	7
IEC max current Ie in DC3-DC5 with L/R ≤ 15ms with 3 poles in series			
	≤24V	A	140
	48V	A	115
	75V	A	90
	110V	A	85
	220V	A	76
IEC max current Ie in DC3-DC5 with L/R ≤ 15ms with 4 poles in series			
	≤24V	A	140
	48V	A	110
	75V	A	110
	110V	A	105
	220V	A	95
Short-time allowable current for 10s (IEC/EN60947-1)		A	760
Protection fuse			
	gG (IEC)	A	160
	aM (IEC)	A	100
Making capacity (RMS value)		A	1200
Breaking capacity at voltage			
	440V	A	1100
	500V	A	775
	690V	A	745
Resistance per pole (average value)		mΩ	0.45
Power dissipation per pole (average value)			
	Ith	W	8.8
	AC3	W	4.1
Tightening torque for terminals			
	min	Nm	6
	max	Nm	7
	min	lbin	4.4
	max	lbin	5.2
Tightening torque for coil terminal			
	min	Nm	0.8
	max	Nm	1
	min	lbin	0.59
	max	lbin	0.74
Conductor section			
AWG/Kcmil			
	max		2/0
Flexible w/o lug conductor section			
	min	mm²	1.5
	max	mm²	70
Flexible c/w lug conductor section			
	min	mm²	1.5
	max	mm²	70
Power terminal protection according to IEC/EN 60529			IP20 front

Mechanical features

The characteristics described in this document are subject to updates or modifications at any time. The descriptions, technical and functional information, illustrations and instructions in this brochure are purely illustrative, and are consequently not contractually binding

Operating position				
		normal		Vertical plan
		allowable		±30°
Fixing				Screw / DIN rail 35mm
Weight			g	2420
Conductor section				
	AWG/kcmil conductor section			
		max		2/0
Auxiliary contact characteristics				
Thermal current Ith			A	140
Operations				
Mechanical life			cycles	15000000
Electrical life			cycles	1400000
AC coil operating				
Rated AC voltage at 50/60Hz			V	48
AC operating voltage				
	of 50/60Hz coil powered at 50Hz			
		pick-up		
			min	%Us 80
			max	%Us 110
		drop-out		
			min	%Us 20
			max	%Us 55
	of 50/60Hz coil powered at 60Hz			
		pick-up		
			min	%Us 85
			max	%Us 110
		drop-out		
			min	%Us 40
			max	%Us 55
AC average coil consumption at 20°C				
	of 50/60Hz coil powered at 50Hz			
			in-rush	VA 300
			holding	VA 20
	of 50/60Hz coil powered at 60Hz			
			in-rush	VA 275
			holding	VA 17
	of 60Hz coil powered at 60Hz			
			in-rush	VA 300
			holding	VA 20
Dissipation at holding ≤20°C 50Hz			W	6.5
Max cycles frequency				
Mechanical operation			cycles/h	1500
Operating times				
Average time for Us control				
	in AC			
		Closing NO		
			min	ms 16
			max	ms 32
		Opening NO		
			min	ms 9
			max	ms 24
UL technical data				

The characteristics described in this document are subject to updates or modifications at any time. The descriptions, technical and functional information, illustrations and instructions in this brochure are purely illustrative, and are consequently not contractually binding

BF95T4A048

FOUR-POLE CONTACTOR, IEC OPERATING CURRENT ITH (AC1) = 140A, AC COIL 50/60HZ, 48VAC

General USE				
	Contactor			
		AC current	A	150
Short-circuit protection fuse, 600V				
	High fault			
		Short circuit current	kA	100
		Fuse rating	A	200
		Fuse class		J
	Standard fault			
		Short circuit current	kA	10
		Fuse rating	A	250
		Fuse class		RK5

Ambient conditions

Temperature				
	Operating temperature			
		min	°C	-50
		max	°C	70
	Storage temperature			
		min	°C	-60
		max	°C	+80
Max altitude			m	3000

Dimensions

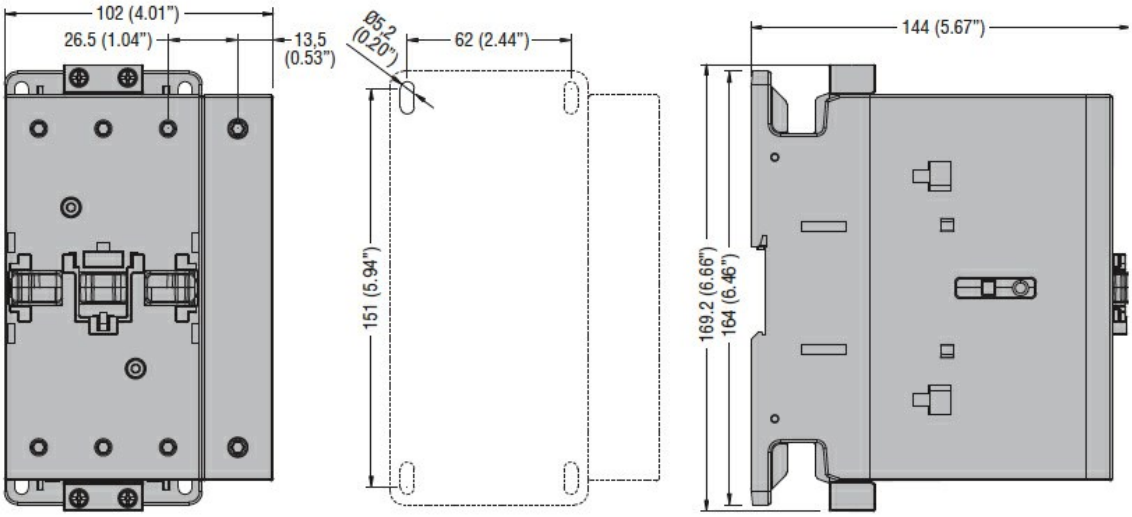

Wiring diagrams

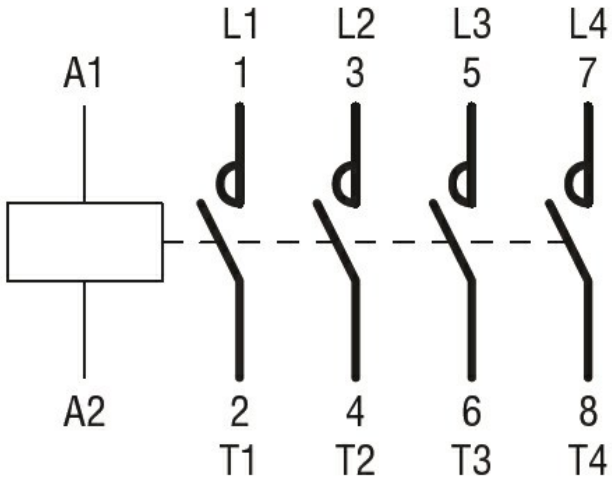

The characteristics described in this document are subject to updates or modifications at any time. The descriptions, technical and functional information, illustrations and instructions in this brochure are purely illustrative, and are consequently not contractually binding

Certifications and compliance

Compliance	
	CSA C22.2 n° 60947-1
	CSA C22.2 n° 60947-4-1
	IEC/EN/BS 60947-1
	IEC/EN/BS 60947-4-1
	UL 60947-1
	UL 60947-4-1
Certificates	
	CCC
	cULus
	EAC

ETIM classification

ETIM 8.0	EC000066 - Power contactor, AC switching

The characteristics described in this document are subject to updates or modifications at any time. The descriptions, technical and functional information, illustrations and instructions in this brochure are purely illustrative, and are consequently not contractually binding