E30044

Damping screw for pressure sensors

DAMPING SCREW

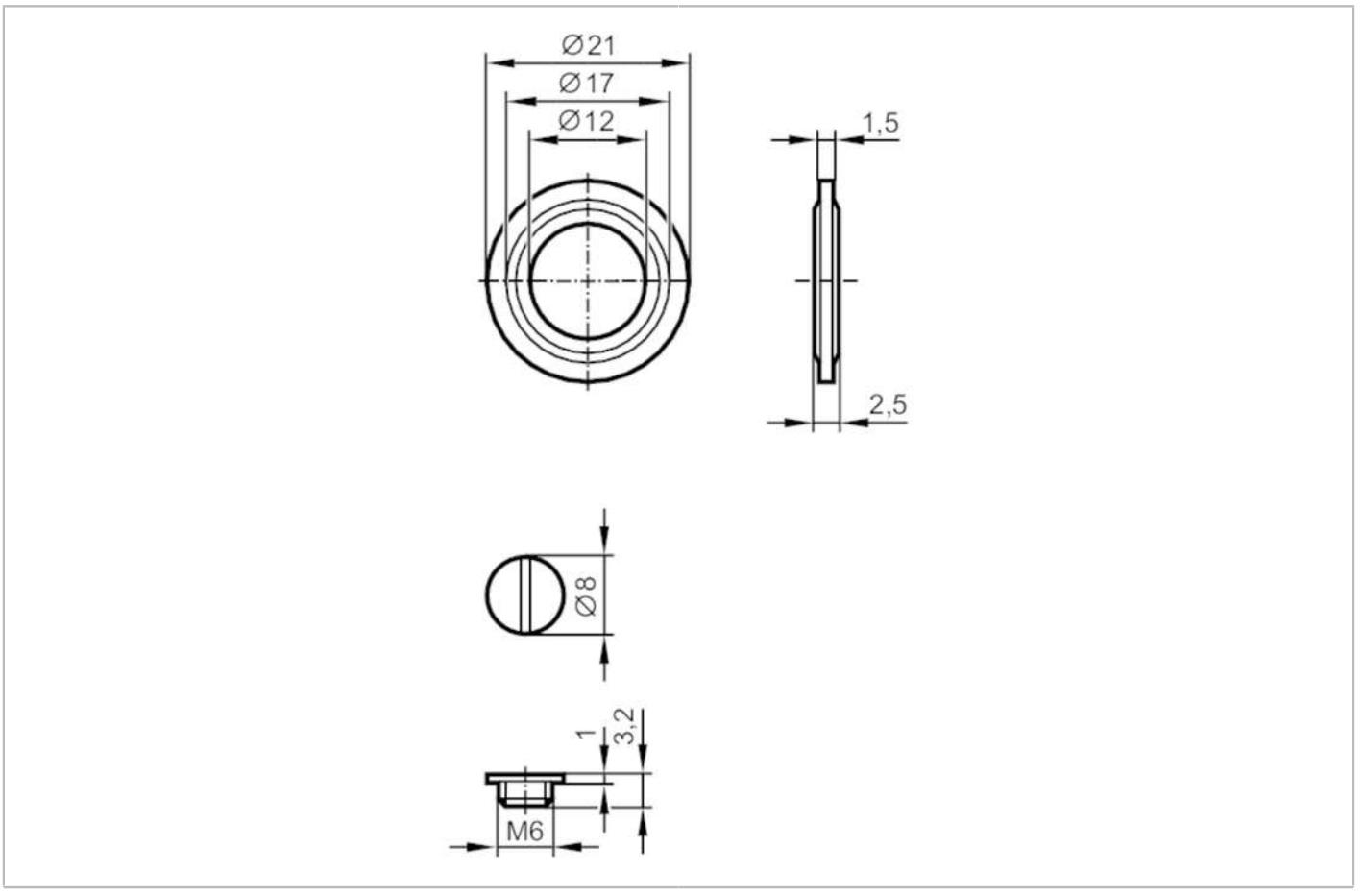

Application		
Design		for pressure sensors Typ PA, PB, PN, PY, PZ
Mechanical data		
Weight	[g]	5.4
Accessories		
Items supplied		sealing ring
Remarks		
Pack quantity		1 pcs.