E30446

IO-Link Bluetooth adapter

IO-LINK INLINE BLUETOOTH ADAPTER

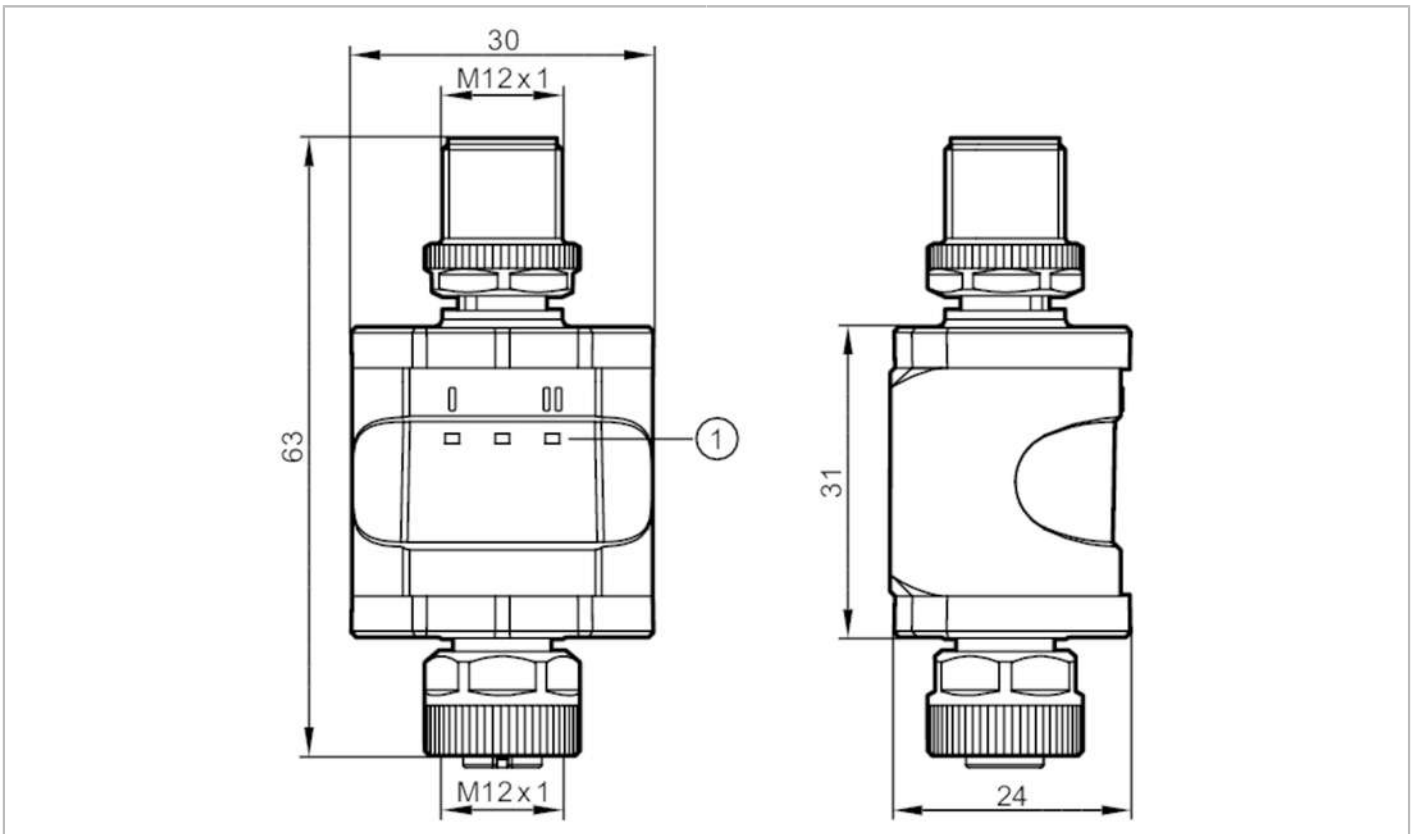

1 LEDs

Application		
Special feature		Gold-plated contacts
Radio approval for		USA; Canada; EU/RED; Australia; Japan; Namibia; Brazil; China; India; Singapore; Mexico; South Africa; Malaysia; Vietnam; Chile; Thailand; Taiwan; South Korea; Indonesia
Note on radio approval		The list of countries applying the European Radio Equipment Directive 2014/53/EU (RED) can be found under “Downloads”.
Electrical data		
Operating voltage	[V]	18...30 DC
Nominal voltage DC	[V]	24
Current consumption	[mA]	30...830; (24 V DC, full load)
Protection class		III
Reverse polarity protection		yes
Software / programming		
Parameter setting options		process value recording
Interfaces		
Communication interface		IO-Link; Bluetooth
Bluetooth		
Transmission standard		BLE 4.0; BLE 4.1; BLE 4.2; EDR 2.0; EDR 2.1
Frequency band		2,4 - 2,482 GHZ
Transmission power	[mW]	10; (10 dBm)
Range		typ. 20 m

E30446

IO-Link Bluetooth adapter

IO-LINK INLINE BLUETOOTH ADAPTER

IO-Link Device			
Transmission type		COM1 (4,8 kBaud); COM2 (38,4 kBaud); COM3 (230,4 kBaud)	
IO-Link revision		1.0; 1.1	
SDCI standard		IEC 61131-9	
Required master port type		A	
Operating conditions			
Ambient temperature	[°C]	-25...60	
Storage temperature	[°C]	-25...70	
Protection		IP 67	
Tests / approvals			
EMC		DIN EN 61000-6-2	
		DIN EN 61000-6-4	
Shock resistance		DIN EN 60068-2-27	15 g (6 ms)
Vibration resistance		DIN EN 60068-2-6	2 g (10...150 Hz)
MTTF	[years]	285	
UL approval		Ta	max. 55 °C
		File number UL	E205959
Mechanical data			
Weight	[g]	88.5	
Dimensions	[mm]	63 x 30 x 24	
Materials		stainless steel (316L/1.4404); brass (2.0401); PA; PBT; FKM; Sealing: FKM;	
Displays / operating elements			
Display		operation	1 x LED, green
		IO-Link	1 x LED, yellow
		Bluetooth	1 x LED, blue
Remarks			
Remarks			the device complies with overvoltage category II
Pack quantity		1 pcs.	
Electrical connection			

Electrical connection - plug

Connector: 1 x M12; coding: A; Contacts: gold-plated

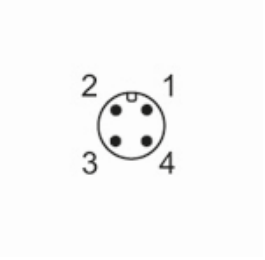

1	L+ supply
2	OUT2
3	L- supply
4	OUT1

E30446

IO-Link Bluetooth adapter

IO-LINK INLINE BLUETOOTH ADAPTER

Electrical connection - socket

Connector: 1 x M12; coding: A; Contacts: gold-plated



1	L+ supply
2	OUT2
3	L- supply
4	OUT1

Electrical connection

Connection

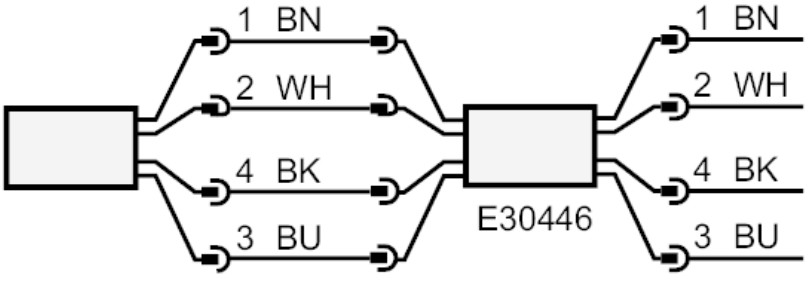

OUT1:	IO-Link
	colours to DIN EN 60947-5-2
	Core colours :
BK =	black
BN =	brown
BU =	blue
WH =	white