21100-016 WASHER, PLASTIC, M6, 100 PIECES



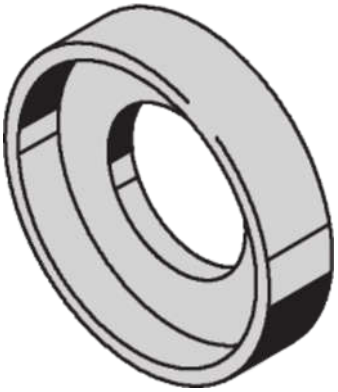

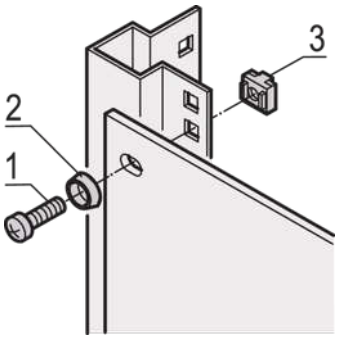

KEY FEATURES

Washer

PRODUCT ATTRIBUTES

Product Type: Washer
Type: Washer
Works With: Front Panels; Eurorack; Novastar; Varistar; Varistar CP
Material: Plastic
Accessory Type: Mounting hardware
Package Quantity: 100

ADDITIONAL PRODUCT DETAILS

Washer used for PCB fixing.

Quantity required for IEEE-Plug-in units (3U/6U)

Quantity required for plug-in units type 2 with extraction handle (3U/6U)

CERTIFICATIONS

RoHS COMPLIANT

North America
All locations
+1.763.422.2661
Chat with us:
schroff.nvent.com

Europe
Straubenhardt, Germany
+49.7082.794.0
Betschdorf, France
+33.3.88.90.64.90
Warsaw, Poland
+48.22.209.98.35
Assago, Italy
+39.02.932.7141
Chat with us:
schroff.nvent.com

Asia
Shanghai, China
+86.21.2412.6943
Qingdao, China
+86.532.8771.6101
Singapore
+65.6768.5800
Shin-Yokohama, Japan
+81.45.476.0271
Chat with us:
schroff.nvent.com

Middle East & India
Dubai, United Arab Emirates
+971.4.378.1700
Bangalore, India
+91.80.6715.2001
Istanbul, Turkey
+90.216.250.7374
Chat with us:
schroff.nvent.com

nVent

Our powerful portfolio of brands:
nVent.com **CADDY ERICO HOFFMAN RAYCHEM SCHROFF TRACER**

© 2023 nVent. All nVent marks and logos are owned or licensed by nVent Services GmbH or its affiliates. All other trademarks are the property of their respective owners.

nVent reserves the right to change specifications without notice.