Foot-switch
Series F1

Description **F1-U2ZD UN**	Article number **6061700008**

Operating symbol

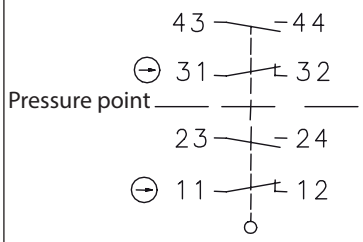

Operating diagram

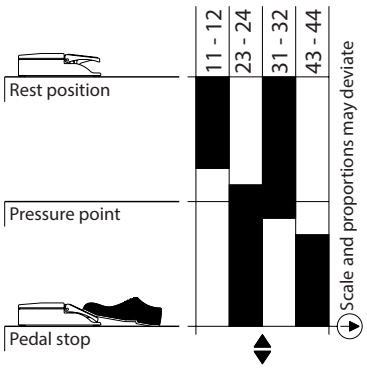

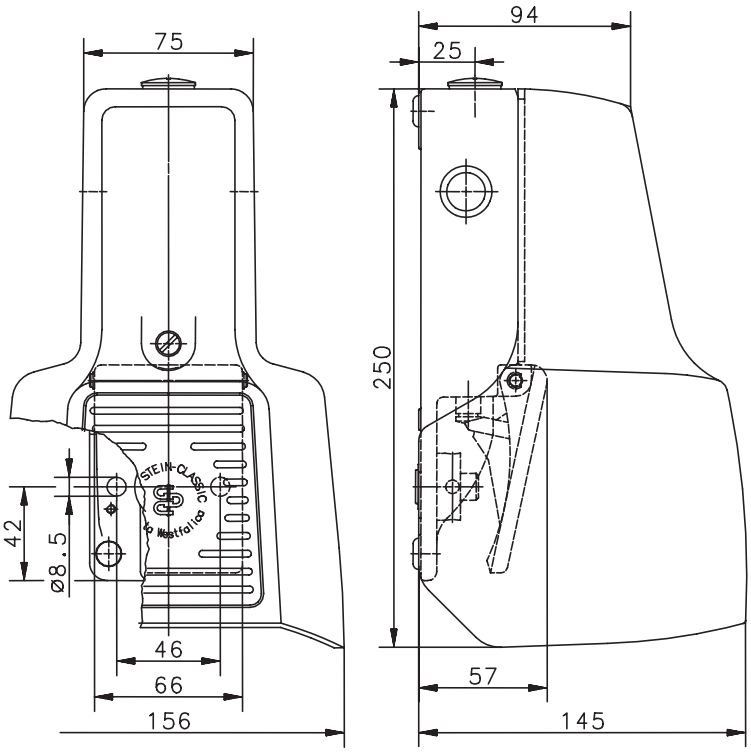

Electrical data		
Rated insulation voltage	U_i	400 V AC
Conv. thermal current	I_{the}	10 A
Rated operational voltage	U_e	240 V
Utilization category		AC-15, U_e 240 V /I_e 3 A, U_i 400 V
Direct opening action	⊖	acc. to IEC/EN 60947-5-1, Annex K (pedal stop)
Short-circuit protective device		Fuse 10 A gG
Protection class		I

Mechanical Data	
Enclosure	AL
Protective guard (Accident protection cover UN)	AL
Actuator	Foot lever (PA)
Ambient air temperature	–30 °C … +80 °C
Contact type	2 N.C. / 2 N.O. (Zb)
Operating force	≈ 10 N (pedal centre)
Pressure point	200 N ± 10 % (pedal centre)
Mechanical life without actuating the pressure point with actuating the pressure point	 10 x 10^6 switching cycles 1 x 10^6 switching cycles
Switching frequency	≤ 50/min
Assembly	2 x M8
Connection	Screw connections (M3,5)
Number of connections	8
Protection ground	2 x M4
Conductor cross-sections	Solid: 0,5 ... 1,5 mm^2 Litz wire with ferrules: 0,5 ... 1,5 mm^2
Cable entry size	3 x M20 x 1,5
Weight including protective guard	≈ 1,5 kg
Protection type	IP 65 acc. to IEC/EN 60529

ID for safety engineering	
B10d	Without actuating the pressure point 20 x 10^6 switching cycles with actuation of the pressure point 2 x 10^6 switching cycles

Standards	
	IEC 60947-5-1
	DIN EN ISO 13849-1

EU Conformity	
	acc. to directive 2006/42/EC (Machinery Directive)

Approvals	
	DGUV
	$_{c}CSA_{US}$ A300 (same polarity)
	CCC

Notes
Tapped holes not in use must be closed with blind plugs. The degree of protection (IP code) specified applies only to a properly closed accident protection cover and in connection with the appropriate cable glands or blind plugs.