AR-AR-024-12

Air-to-Air Thermoelectric Cooling Assembly

Air-to-Air Thermoelectric Cooling Assembly

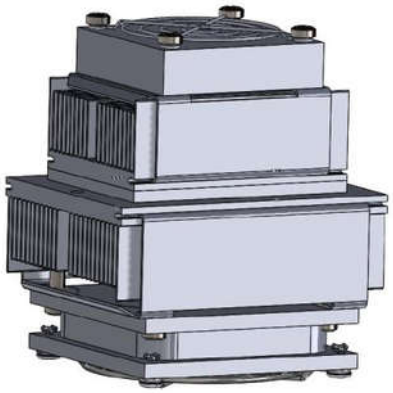

The Air-to-Air Thermoelectric cooling assemblies are compact devices that can be used to cool down objects through convection. Heat is pumped from one side of the thermoelectric assembly (i.e. cold side) by Peltier thermoelectric modules and dissipated from the other side of the assembly (i.e. hot side) to the environment through the use of bespoke heat sinks and highly efficient DC fans. The thermoelectric modules, whose reliability and maintenance-free operation has been proven by the years, are carefully selected for each assembly in order to ensure the best cooling performance and minimise power consumption.

Air-to-air assemblies are available in a variety of cooling power outputs and either in 12V or 24V, as indicated by the part number (i.e. AR-AR-XXX-12 or AR-AR-XXX-24).

Bespoke solutions/configurations are offered, as well as moisture protection options, however these are only available for large order quantities (minimum order quantities apply).

CHARACTERISTICS

- Reliability
- Compact design
- Excellent Control over Temperature
- DC operation (12V or 24V nominal voltage input)
- Thermoelectric modules with high Coefficient of Performance (COP)
- RoHS compliant

MAIN APPLICATIONS

- Electronics' cabinets
- Medical instrumentation
- Analytical diagnostics
- Industrial automation
- Food and beverage cooling
- Laser systems' cooling

AR-AR-024-12 – Assembly Specifications

Maximum Cooling Power P_{Cmax} (W)	23.8
Nominal Voltage (V)	12
Maximum Voltage (V)	15
Nominal Current (A)	2.93
Start-up Current (A)	3.825
Power Input (W)	35.16
Operating Temperature (^oC)	-10 to 51
Weight (kg)	0.6
Performance Tolerance (%)	±10
L10 of fans at 70^oC (hrs)	33418 (hot side)/19281 (cold side)

PERFORMANCE CURVE

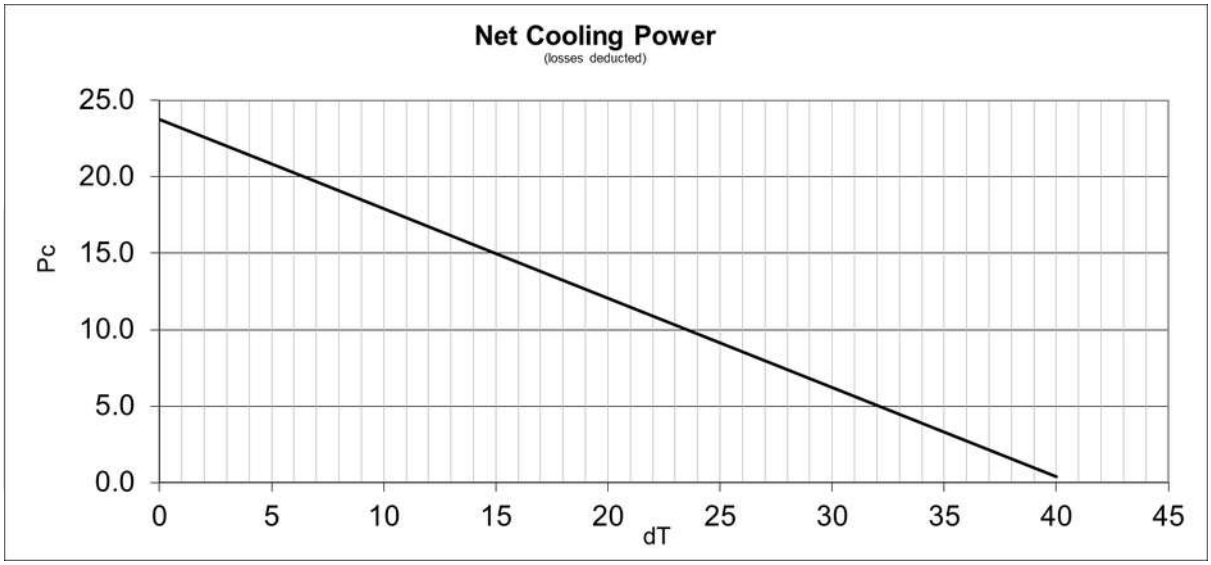

TECHNICAL DRAWINGS

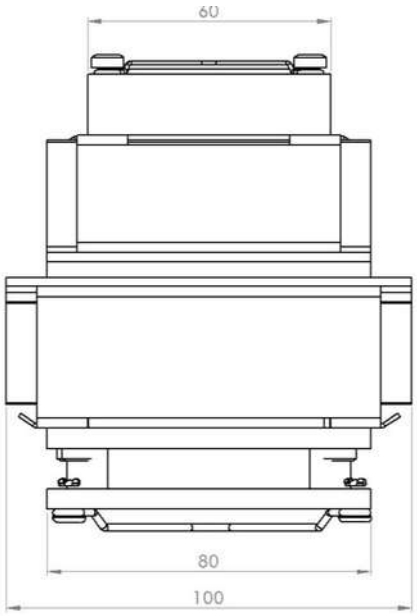

Cold side

Hot side

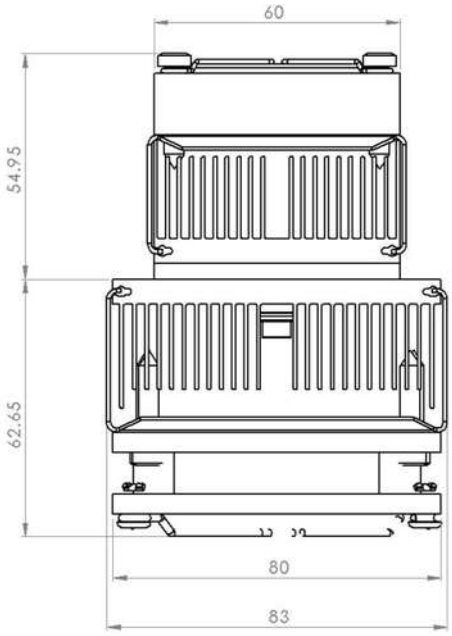

LOCATION AND DIMENSIONS OF MOUNTING HOLES

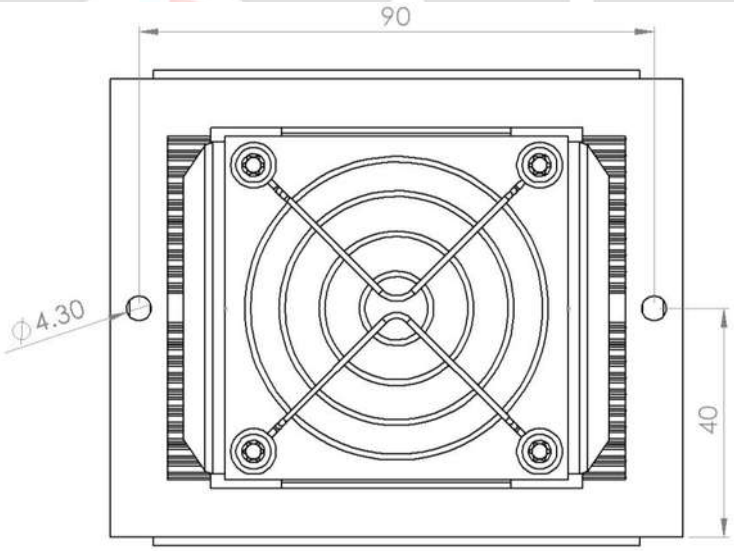

Notes:

1. All dimensions are in mm.
2. Thermally conductive interface material is applied on thermoelectric modules' surfaces for more efficient heat transfer.
3. The assembly, with its current configuration, is for indoor use only.

Contact us:
Europe: +44 (0) 116 279 6899
Asia: +8522 1159628

or send us an email at:
Information: info@etdyn.com
R&D: design@etdyn.com

All assembly specifications are subject to change without prior notice. The Adaptive brand, Adaptive Thermal Management logo and other marks are registered trademarks of Adaptive or an affiliate company thereof.