TIMKEN

The Timken Company
4500 Mt Pleasant St. NW
N. Canton, OH 44720
Phone: (234) 262-3000
E-Mail: CustomerCAD@timken.com • **Web site:** www.timken.com

Timken Part Number HM801346X - HM801310, Tapered Roller Bearings - TS (Tapered Single) Imperial

This is the most basic and most widely used type of tapered roller bearing. It consists of two main separable parts: the cone (inner ring) assembly and the cup (outer ring). It is typically mounted in opposing pairs on a shaft.



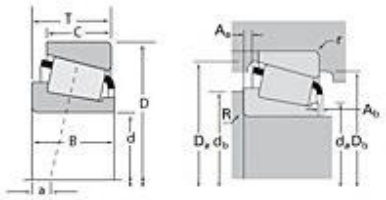

Specifications | Dimensions | Abutment and Fillet Dimensions | Basic Load Ratings | Factors

Specifications

Series	HM801300
Cone Part Number	HM801346X
Cup Part Number	HM801310
Design Units	Imperial
Bearing Weight	1.70 lb 0.800 Kg
Cage Type	Stamped Steel

Dimensions

d - Bore	1.5 in 38.1 mm
D - Cup Outer Diameter	3.2500 in 82.550 mm

B - Cone Width	1.1250 in 28.575 mm
C - Cup Width	0.9063 in 23.020 mm
T - Bearing Width	1.1563 in 29.370 mm

Abutment and Fillet Dimensions

R - Cone Backface "To Clear" Radius[1]	0.090 in 2.290 mm
r - Cup Backface "To Clear" Radius[2]	0.130 in 3.30 mm
da - Cone Frontface Backing Diameter	1.93 in 49.02 mm
db - Cone Backface Backing Diameter	2.13 in 54.10 mm
Da - Cup Frontface Backing Diameter	3.11 in 78.00 mm
Db - Cup Backface Backing Diameter	2.68 in 68.07 mm
Ab - Cage-Cone Frontface Clearance	0.1 in 2.5 mm
Aa - Cage-Cone Backface Clearance	0.06 in 1.5 mm
a - Effective Center Location[3]	-0.19 in -4.80 mm

Basic Load Ratings

C90 - Dynamic Radial Rating (90 million revolutions)[4]	5980 lbf 26600 N
C1 - Dynamic Radial Rating (1 million revolutions)[5]	23100 lbf 103000 N
C0 - Static Radial Rating	29300 lbf 130000 N
C_{a90} - Dynamic Thrust Rating (90 million revolutions)[6]	5590 lbf 24900 N

Factors

K - Factor[7]	1.07
e - ISO Factor[8]	0.55
Y - ISO Factor[9]	1.1
G1 - Heat Generation Factor (Roller-Raceway)	33.7
G2 - Heat Generation Factor (Rib-Roller End)	14
Cg - Geometry Factor	0.0928

[1] These maximum fillet radii will be cleared by the bearing corners.
[2] These maximum fillet radii will be cleared by the bearing corners.
[3] Negative value indicates effective center inside cone backface.
[4] Based on 90 x 10^6 revolutions L_{10} life, for The Timken Company life calculation method. C_{90} and C_{a90} are radial and thrust values.
[5] Based on 1 x 10^6 revolutions L_{10} life, for the ISO life calculation method.
[6] Based on 90 x 10^6 revolutions L_{10} life, for The Timken Company life calculation method. C_{90} and C_{a90} are radial and thrust values for a single-row, $C_{90(2)}$ is the two-row radial value.
[7] These factors apply for both inch and metric calculations. Consult your Timken representative for instruction on use.
[8] These factors apply for both inch and metric calculations. Consult your Timken representative for instruction on use.
[9] These factors apply for both inch and metric calculations. Consult your Timken representative for instruction on use.

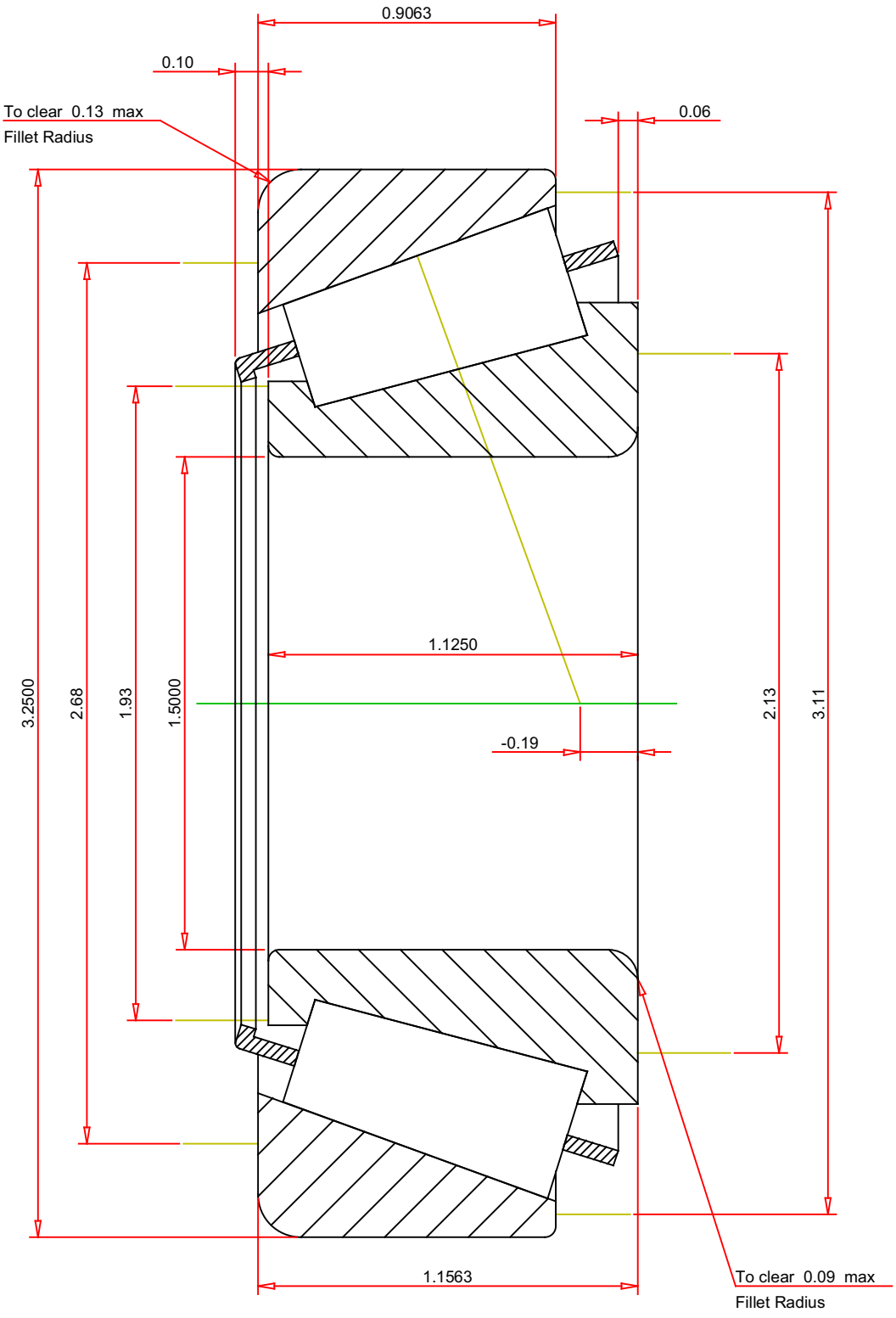

IMPERIAL UNITS

ISO Factor - e	0.55	
ISO Factor - Y	1.1	
Bearing Weight	1.7	lb
Number of Rollers Per Row	18	
Effective Center Location	-0.19	inch

TIMKEN®

THE TIMKEN COMPANY
NORTH CANTON, OHIO USA

HM801346X - HM801310
TS BEARING ASSEMBLY

K Factor	1.07	
Dynamic Radial Rating - C90	5980	lbf
Dynamic Thrust Rating - Ca90	5590	lbf
Static Radial Rating - C0	29300	lbf
Dynamic Radial Rating - C1	23100	lbf

Every reasonable effort has been made to ensure the accuracy of the information contained in this writing, but no liability is accepted for errors, omissions or for any other reason.

FOR DISCUSSION ONLY