213516
SBP-RGB-R50D-B5
Signal lighting

- Status display 360°
- High illuminance due to state-of-the-art, highly efficient LEDs
- Low energy consumption
- Can be used immediately thanks to three trigger inputs (eight predefined/user-defined color settings)
- Freely configurable functions via IO-Link (process data)
- High protection type IP 67
- Easy installation

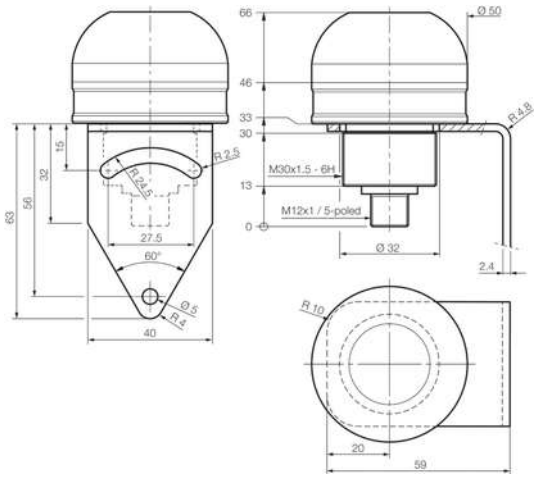

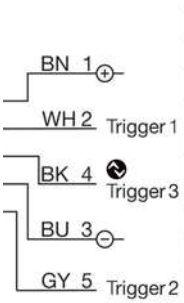

Operating mode: External trigger				
TRIG 1	TRIG 2	TRIG 3	Pre-Set	Factory setting
0	0	0	1	Off
1	0	0	2	Red
0	1	0	3	Green
1	1	0	4	Yellow
0	0	1	5	Blue
1	0	1	6	Red blinking
0	1	1	7	Green blinking
1	1	1	8	Yellow blinking

All Trigger Inputs have a delay ~50 ms.
Pre-sets can be defined via IO-Link.

BK: black
BN: brown
BU: blue
GY: grey
WH: white

Function

IO-Link

Technical data (typ.)	+20°C
Service voltage	18 … 30 V DC
Internal power consumption	75 mA (24 V DC)
Power	1.8 W (24 V DC)
Inverse polarity protection	Yes
Illuminated area	50 x 20 mm (Ø x H)
Number of segments	1
Housing material	Aluminum (natural, Anodized)
Material	PC diffuse, dome-shaped (Diffusor)
Weight	116 g
Protection class	III
Approvals	UL
Product series	SBP-RGB Point
Operation modes	Static / blinking / flashing
Buzzer	Without buzzer
Light intensity can be adjusted	10 to 100 %
Scope of delivery	Mounting bracket
Trigger input high level	> 8.0 V
Trigger input low level	< 5.0 V
Trigger input	8 color presets: selectable via trigger 1 + 2 +3

213516
SBP-RGB-R50D-B5
Signal lighting

Technical data (typ.)	+20°C
Interface	■ IO-Link (V1.1, COM2 38,4 kBd, 5000 µs) ■ for parameterization (process data)
Color	Red, green, yellow, blue, white, orange, pink, user-defined (IO-Link)
Ambient temperature during operation	0 … +50 °C
Vibration/shock resistance	10 to 55 Hz / 1.0 mm / 30 g / 11 ms
Protection type	IP 67
Connection	Connector, M12, 5-pin

More information / accessories	https://www.di-soric.com/213516

© di-soric . Right to change reserved