SMF520

Magnetic-inductive flow meter

SMG65KGFFRKG/USD

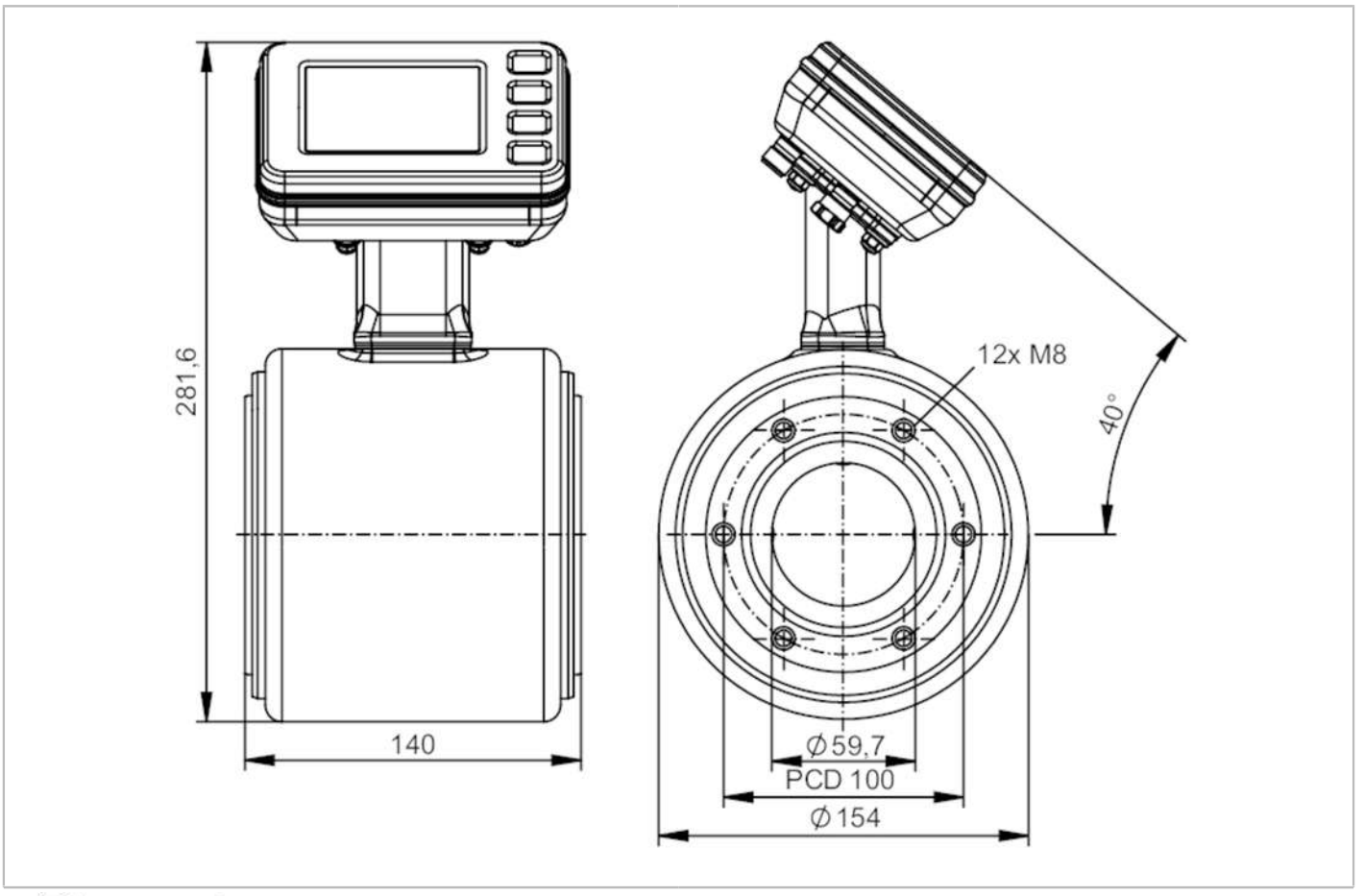

EC 1935/2004 FCM IO-Link

Product characteristics					
Measuring range		20...2000 l/min	1200...120000 l/h	0.1...10 m/s	1.2...120 m³/h
Nominal diameter		DN65 (2 1/2“)			
Process connection		ifm-specific device flange			
Application					
Special feature		Gold-plated contacts			
Application		food and beverage industry			
Media		conductive liquids; water; hydrous media			
Note on media		food products such as beer, milk, fruit juices, soft drinks, ketchup, yoghurt, yoghurt toppings, ice cream			
		conductivity: ≥ 5 µS/cm			
Medium temperature	[°C]	-20...150			
Min. bursting pressure		37.5 bar		3.75 MPa	
Pressure rating		25 bar		2.5 MPa	
Electrical data					
Operating voltage	[V]	18...32 DC			
Current consumption	[mA]	250; (24V)			
Protection class		III			
Reverse polarity protection		yes			
Power-on delay time	[s]	< 5			

SMF520

Magnetic-inductive flow meter

SMG65KGFFRKG/USD

Measuring principle	magnetic-inductive			
Inputs / outputs				
Total number of inputs and outputs	2			
Inputs				
Inputs	OUT2	external totaliser reset		
Outputs				
Total number of outputs	2			
Output signal	OUT1	pulse signal; totaliser switching signal; diagnostic signal; IO-Link		
	OUT2	analogue signal; pulse signal; totaliser switching signal; diagnostic signal		
Electrical design	PNP/NPN			
Pulse output	flow rate meter			
Short-circuit protection	yes			
Type of short-circuit protection	pulsed			
Overload protection	yes			
Analogue				
Number of analogue outputs	1			
Analogue current output [mA]	4...20; (skalierbar)			
Max. load [Ω]	500			
Resolution of analogue output	0.38 µA			
Digital				
Number of digital outputs	2			
Max. voltage drop switching output DC [V]	2			
Permanent current rating of switching output DC [mA]	100			
Switching frequency DC [Hz]	0...10000			
Measuring/setting range				
Measuring range	20...2000 l/min	1200...120000 l/h	0.1...10 m/s	1.2...120 m³/h
Display range	-2400...2400 l/min	-144000...144000 l/h	-12...12 m/s	-144...144 m³/h
Resolution	0.1 l/min	100 l/h	0.01 m/s	0.01 m³/h
Note on factory setting	0...30,0 m³/h			
Analogue start point ASP	-2000...1600 l/min	-120000...96000 l/h	-10.05...8.05 m/s	-120...96 m³/h
Analogue end point AEP	-1600...2000 l/min	-96000...120000 l/h	-8.05...10.05 m/s	-96...120 m³/h
Low flow cut-off LFC	0...1600 l/min	0...96000 l/h	0...8.05 m/s	0...96 m³/h
Pulse length [s]	0.00005...2			
Pulse value	0.004...99990000 l			
Temperature monitoring				
Measuring range [°C]	-20...150			
Display range [°C]	-20...150			
Resolution [°C]	0.01			
Analogue start point [°C]	-20...116			
Analogue end point [°C]	14...150			

SMF520

Magnetic-inductive flow meter

SMG65KGFFRKG/USD

Conductivity monitoring			
Measuring range	[µS/cm]	100...100000	
Display range	[µS/cm]	0...10000000	
Resolution	[µS/cm]	1	
Analogue start point	[µS/cm]	0...80000	
Analogue end point	[µS/cm]	20000...100000	
Accuracy / deviations			
Volumetric flow monitoring			
Accuracy (under reference conditions)		with optional factory calibration (availability is being planned)	± (0,2 % MW + 2 mm/s)
		standard	± (0,5 % MW + 1,5 mm/s)
Repeatability		0,1% MW	
Temperature monitoring			
Accuracy	[K]	± 1	
Repeatability	[K]	± 0,5	
Conductivity monitoring			
Accuracy (in the measuring range)		in the range of 100...20000 µS/cm	±10% MW
		in the range of 20000...100000 µS/cm	±20% MW
Repeatability		± 5% MW	
Response times			
Volumetric flow monitoring			
Response time	[s]	< 0.3	
Damping process value dAP	[s]	0...5	
Temperature monitoring			
Response time	[s]	< 3; (flow velocity: ≥ 0,5m/s)	
Conductivity monitoring			
Response time	[s]	< 2	
Software / programming			
Diagnostic functions		direction of flow detection; liquid detection	
Interfaces			
Communication interface		IO-Link	
Transmission type		COM3 (230,4 kBaud)	
IO-Link revision		1.1.3	
SDCI standard		IEC 61131-9	
Profiles		Common - I&D	Identification and Diagnosis
		Smart Sensor - SSP 4.3.4	Measuring and Switching Sensor, floating point, 4 channel
SIO mode		yes	
Required master port type		A	
Process data analogue		6	
Process data binary		8	
Min. process cycle time	[ms]	1.9	

SMF520

Magnetic-inductive flow meter

SMG65KGFFRKG/USD

IO-Link process data (cyclical)		**function**	**bit length**
		totaliser	32
		flow	32
		temperature	32
		conductivity	32
		status	4
		binary switching information	8
IO-Link functions (acyclical)		direction of flow detection; totaliser; memory; operating hours counter; internal temperature; simulation function	
Supported DeviceIDs		**Type of operation**	**DeviceID**
		default	1795
Operating conditions			
Ambient temperature	[°C]	-20...65	
Storage temperature	[°C]	-20...80	
Protection		IP 67; IP 69	
Tests / approvals			
EMC		DIN 61326-1	
Shock resistance		DIN IEC 68-2-27	20 g (18ms)
Vibration resistance		DIN IEC 68-2-6	5 g (10...2000Hz)
MTTF	[years]	81	
UL approval		UL approval no.	I031
Pressure Equipment Directive		Sound engineering practice; can be used for group 2 fluids; group 1 fluids on request	
Mechanical data			
Weight	[g]	6925.7	
Inlet pipe length		5 x DN	
Outlet pipe length		2 x DN	
Materials		housing: stainless steel (316L/1.4404); flange: stainless steel (304/1.4301); electronics fixture: stainless steel (304/1.4301); electronics: stainless steel (316L/1.4404); Display: polysulfone; Display-Sealing: FKM; LED ring: PP	
Materials (wetted parts)		Pipe section: PFA; electrodes: stainless steel (316L/1.4435)	
Nominal diameter		DN65 (2 1/2“)	
Process connection		ifm-specific device flange	
Surface characteristics Ra/Rz of the wetted parts		≤ 0.4 µm	
Displays / operating elements			
Display		process value	full graphics TFT display, multi-colour 3,5" 320 x 240 Pixel
			display layouts: 4
			display rotation: 4 x 90°
		operating status	LED ring, three-colour
Display unit		l/min; l/h; hl/min; hl/h; m³/min; m³/h; m/s; °C; µS/cm; S/m; ms/cm	
Factory setting		m³/h; °C; µS/cm	
Language		German; English; Spanish; French; Italian; Japanese; Korean; Portuguese; Chinese	
Operating elements		4	capacitive pushbuttons

SMF520

Magnetic-inductive flow meter

SMG65KGFFRKG/USD

Remarks

Remarks	MW = measured value
	MEW = Final value of the measuring range
	pulse and totaliser signal are only available for one of the two outputs
	reference conditions (1/2): water (free of gas bubbles), 15...35 °C, process connection: DIN32676 series A, pipe standard suitable for process connection
	reference conditions (2/2): inlet pipe length 10xDN, outlet pipe length 5xDN, device settling time: 30 minutes, device orientation: horizontal, display orientation: up
Pack quantity	1 pcs.

Electrical connection

Connector: 1 x M12; coding: A; Contacts: gold-plated



Connection

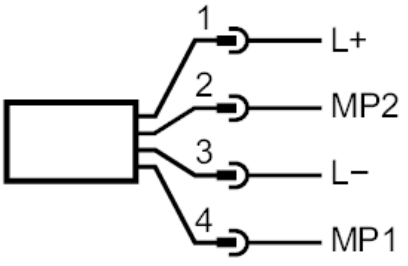

Electrical connection - plug

1	L+	
2	OUT2	MP2, DO, AO, reset
3	L-	
4	OUT1	MP1, DO, IO-Link

AO: analogue output; DO: digital output; MP: multi-function connection