KR Supercapacitors

Coin cells



Features and benefits

- High specific capacitance
- Low leakage current
- Long cycle life
- Eco-friendly

Applications

- Computers and peripherals
- Network switches and routers
- Utility meters
- HVAC Controls
- Appliances and white goods
- Real-time clock backup
- Office equipment

Description

Eaton supercapacitors are high reliability, high power, ultra-high capacitance energy storage devices utilizing electrochemical double layer capacitor (EDLC) construction combined with proprietary materials and processes. This combination of advanced technologies allows Eaton to offer a wide variety of capacitor solutions tailored to applications for backup power, pulse power and hybrid power systems. They can be applied as the sole energy storage or in combination with batteries to optimize cost, life time and run time. System requirements can range from a few microwatts to megawatts. All products feature low ESR for high power density with environmentally friendly materials for a green power solution. Eaton supercapacitors are maintenance-free with design lifetimes up to 20 years and operating temperatures down to -40 °C and up to +85 °C.

Specifications

Capacitance	0.1 F to 1.5 F
Maximum working voltage	5.5 V
Surge voltage	6.3 V
Capacitance tolerance	-20% to +80% +20 °C
Operating temperature range	-25 °C to +70 °C
Extended operating temperature range	-25 °C to +85 °C (with voltage derating to 3.6 V @ +85 °C)

Standard Product

Capacitance (F)	Part number	Type	Lead length	Max. initial DC ESR (Ω) (Equivalent Series Resistance) measured @ 1kHz	Typical mass (g)
0.1	KR-5R5V104-R	Vertical	Standard	75	1.4
0.1	KR-5R5H104-R	Horizontal	Standard	75	1.4
0.1	KR-5R5C104-R	Cylindrical	Standard	75	3.3
0.1	KR-5R5C104H-R	Cylindrical	Short	75	3.3
0.22	KR-5R5V224-R	Vertical	Standard	75	1.4
0.22	KR-5R5H224-R	Horizontal	Standard	75	1.4
0.22	KR-5R5C224-R	Cylindrical	Standard	75	3.3
0.22	KR-5R5C224H-R	Cylindrical	Short	75	3.3
0.33	KR-5R5V334-R	Vertical	Standard	50	1.4
0.33	KR-5R5H334-R	Horizontal	Standard	50	1.4
0.33	KR-5R5C334-R	Cylindrical	Standard	50	3.3
0.33	KR-5R5C334H-R	Cylindrical	Short	50	3.3
0.47	KR-5R5V474-R	Vertical	Standard	50	1.4
0.47	KR-5R5H474-R	Horizontal	Standard	50	1.4
0.47	KR-5R5C474-R	Cylindrical	Standard	50	3.3
0.47	KR-5R5C474H-R	Cylindrical	Short	50	3.3
1.0	KR-5R5V105-R	Vertical	Standard	30	4.2
1.0	KR-5R5H105-R	Horizontal	Standard	30	4.2
1.0	KR-5R5C105-R	Cylindrical	Standard	30	9.1
1.0	KR-5R5C105H-R	Cylindrical	Short	30	9.1
1.5	KR-5R5V155-R	Vertical	Standard	30	4.2
1.5	KR-5R5H155-R	Horizontal	Standard	30	4.2
1.5	KR-5R5C155-R	Cylindrical	Standard	30	9.1
1.5	KR-5R5C155H-R	Cylindrical	Short	30	9.1

Performance

Parameter	Capacitance Change (% of initial value)	ESR (% of max. initial value)
Life — +70 °C @ 5.5 Vdc, 1000 hours	≤ 30%	≤ 400%
Life — +85 °C @ 3.6 Vdc, 2000 hours	≤ 30%	≤ 400%
Storage Life — -25 °C to +70 °C, 1000 hours	≤ 30%	≤ 400%

Dimensions (mm)

KR-5R5V104/224/334/474-R

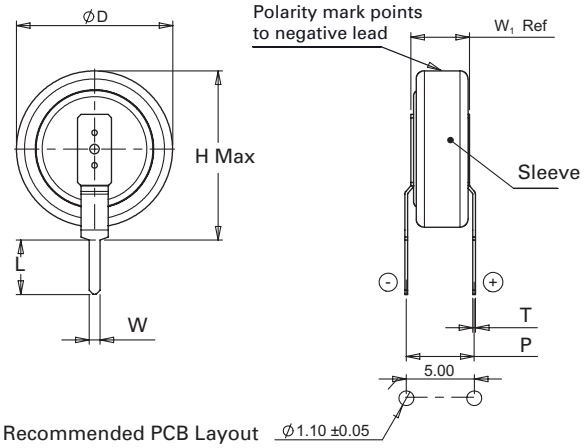

R-5R5V105/155-R

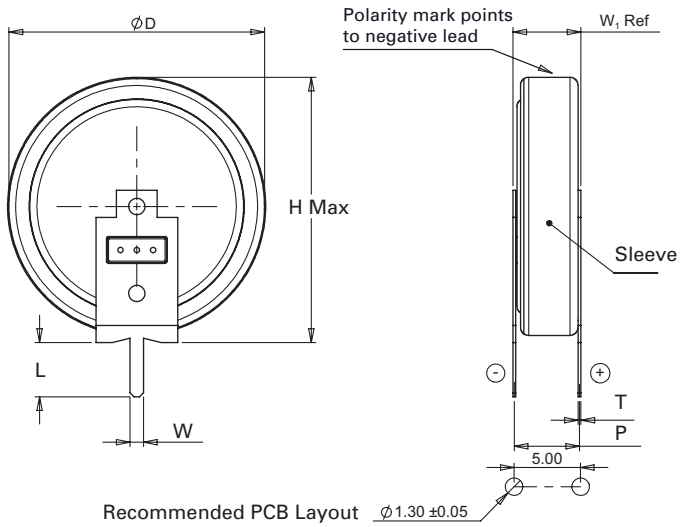

Part Number	Ø D ±0.2	H Max	L ±0.1	P ±0.3	T	W±0.1	W1 Ref.
KR-5R5V104-R	11.5	12.7	4.0	5.0	0.2	0.8	4.3
KR-5R5V224-R	11.5	12.7	4.0	5.0	0.2	0.8	4.3
KR-5R5V334-R	11.5	12.7	4.0	5.0	0.2	0.8	4.3
KR-5R5V474-R	11.5	12.7	4.0	5.0	0.2	0.8	4.3
KR-5R5V105-R	19.0	19.7	4.0	5.0	0.2	1.0	5.0
KR-5R5V155-R	19.0	19.7	4.0	5.0	0.2	1.0	5.0

KR-5R5H104/224/334/474-R

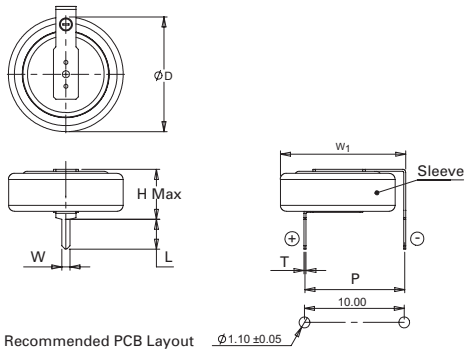

KR-5R5H105/155-R

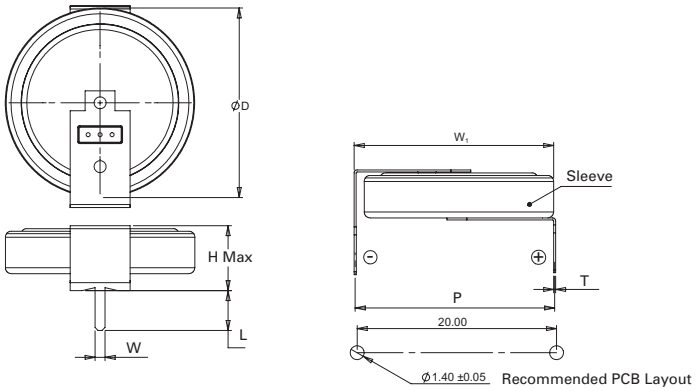

Part Number	Ø D ±0.2	H Max	L ±0.1	P	T	W±0.1	W1 ±0.5.
KR-5R5H104-R	11.5	5.2	3.0	10.0±0.3	0.2	0.8	12.4
KR-5R5H224-R	11.5	5.2	3.0	10.0±0.3	0.2	0.8	12.4
KR-5R5H334-R	11.5	5.2	3.0	10.0±0.3	0.2	0.8	12.4
KR-5R5H474-R	11.5	5.2	3.0	10.0±0.3	0.2	0.8	12.4
KR-5R5H105-R	19.0	6.7	4.0	20.0±0.5	0.2	1.0	20.0
KR-5R5H155-R	19.0	6.7	4.0	20.0±0.5	0.2	1.0	20.0

Dimensions (mm)

KR-5R5C104/224/334/474-R

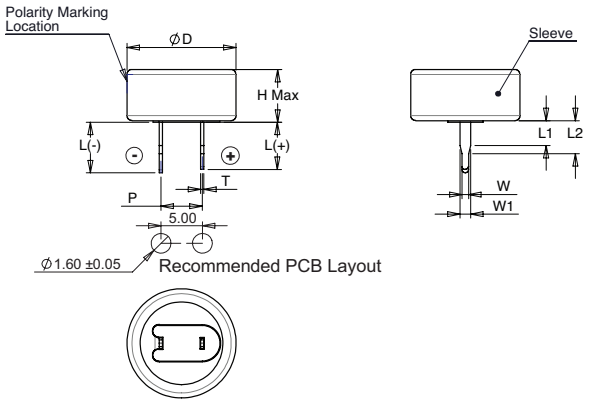

KR-5R5C105/155-R

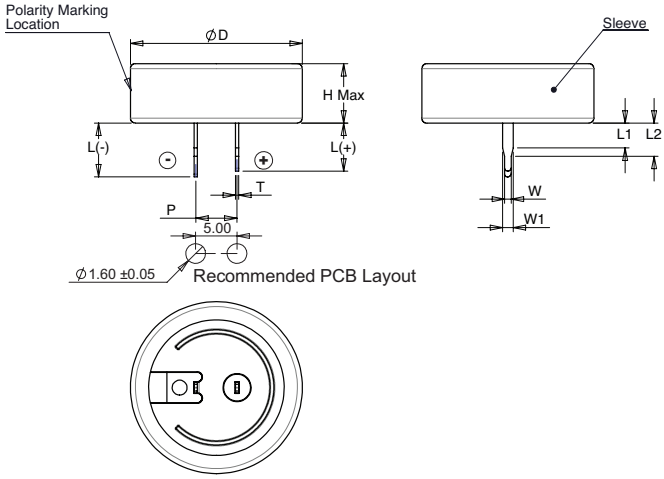

C Type (cylindrical)

Part Number	Ø D Max	H Max	L (-) ±0.2	L (+) ±0.2	P ±0.3	T ±0.05	L1 ±0.10	L2 ±0.10	W ±0.06	W1 ±0.06
KR-5R5C104-R	13.5	6.5	6.1	5.7	5.0	0.4	3.0	4.0	0.8	1.3
KR-5R5C104H-R	13.5	6.5	3.3	3.3	5.0	0.4	0.9	1.9	0.8	1.3
KR-5R5C224-R	13.5	6.5	6.1	5.7	5.0	0.4	3.0	4.0	0.8	1.3
KR-5R5C224H-R	13.5	6.5	3.3	3.3	5.0	0.4	0.9	1.9	0.8	1.3
KR-5R5C334-R	13.5	6.5	6.1	5.7	5.0	0.4	3.0	4.0	0.8	1.3
KR-5R5C334H-R	13.5	6.5	3.3	3.3	5.0	0.4	0.9	1.9	0.8	1.3
KR-5R5C474-R	13.5	6.5	6.1	5.7	5.0	0.4	3.0	4.0	0.8	1.3
KR-5R5C474H-R	13.5	6.5	3.3	3.3	5.0	0.4	0.9	1.9	0.8	1.3
KR-5R5C105-R	21.5	7.1	6.5	5.8	5.0	0.4	3.0	4.0	0.8	1.3
KR-5R5C105H-R	21.5	7.1	3.3	3.3	5.0	0.4	0.8	1.8	0.8	1.3
KR-5R5C155-R	21.5	7.1	6.5	5.8	5.0	0.4	3.0	4.0	0.8	1.3
KR-5R5C155H-R	21.5	7.1	3.3	3.3	5.0	0.4	0.8	1.8	0.8	1.3

Part numbering system

KR	—	5	R	5	□	□ □		□	H*	-R
Family Code		Voltage (V) R = Decimal			Configuration	Capacitance (µF)			Short lead length	RoHS Compliant
						Value		Multiplier		
		5R5 = 5.5 V			V = Vertical H = Horizontal C=Cylindrical	Example: 474 = 47 x 104 µF or 0.47 F				

* Applies to cylindrical part numbers only. If ordering vertical or horizontal types, or standard lead length on cylindrical type, omit "H" from part number.

Packaging information

- Standard packaging: 500 pieces per package
- For 0.1 F to 0.47 F, 500 pieces per bag
- For 1.0 F to 1.5 F, 100 pieces per tray, 5 trays per box

Part marking

- Manufacturer
- Capacitance (F)
- Max operating voltage (V)
- Polarity

Wave solder profile

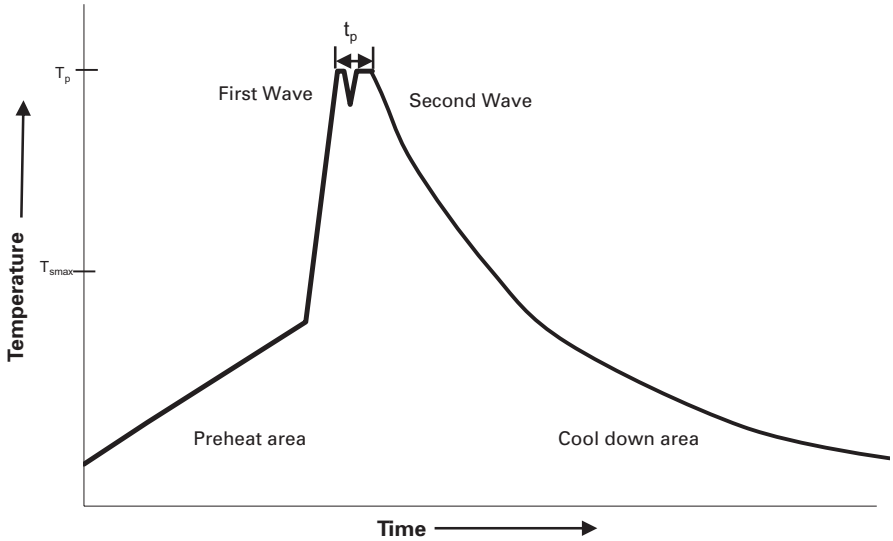

Profile Feature		Standard SnPb Solder	Lead (Pb) Free Solder
Preheat and soak	• Temperature max. (T_{smax})	100 °C	100 °C
	• Time max.	60 seconds	60 seconds
Δ preheat to max Temperature		160 °C max.	160 °C max.
Peak temperature (Tp)*		235 °C – 260 °C	250 °C – 260 °C
Time at peak temperature (t_p)		10 seconds max 5 seconds max each wave	10 seconds max 5 seconds max each wave
Ramp-down rate		~ 2 K/s min ~3.5 K/s typ ~5 K/s max	~ 2 K/s min ~3.5 K/s typ ~5 K/s max
Time 25 °C to 25 °C		4 minutes	4 minutes

Manual solder

Do not touch the supercapacitor's external sleeve with the soldering rod or the sleeve will melt or crack. The recommended temperature of the soldering rod tip is less than 260 °C (maximum: 350 °C) and the soldering duration should be less than 5 seconds. Minimize the time that the soldering iron is in direct contact with the terminals of the supercapacitor as excessive heating of the leads may lead to higher equivalent series resistance (ESR).

Reflow soldering

Do not use reflow soldering using infrared or convection oven heating methods.

Cleaning/Washing

Avoid cleaning of circuit boards, however if the circuit board must be cleaned use static or ultrasonic immersion in a standard circuit board cleaning fluid for no more than 5 minutes and a maximum temperature of +60 °C. Afterwards thoroughly rinse and dry the circuit boards. In general, treat supercapacitors in the same manner you would an aluminum electrolytic capacitor.

Life Support Policy: Eaton does not authorize the use of any of its products for use in life support devices or systems without the express written approval of an officer of the Company. Life support systems are devices which support or sustain life, and whose failure to perform, when properly used in accordance with instructions for use provided in the labeling, can be reasonably expected to result in significant injury to the user.

Eaton reserves the right, without notice, to change design or construction of any products and to discontinue or limit distribution of any products. Eaton also reserves the right to change or update, without notice, any technical information contained in this bulletin.

Eaton
Electronics Division
1000 Eaton Boulevard
Cleveland, OH 44122
United States
www.eaton.com/electronics

© 2016 Eaton
All Rights Reserved
Printed in USA
Publication No. 4327
September 2016

Eaton is a registered trademark.

All other trademarks are property of their respective owners.

Powering Business Worldwide