ESD Protector
Overvoltage Protection Device

PRODUCT: PESD0603-240

DOCUMENT: SCD27256
REV LETTER: I
REV DATE: OCTOBER 29, 2015

Specification Status: Released

BENEFITS

- ESD protection for high frequency applications (HDMI 1.3)
- Smaller form factor for board space savings
- Helps protect electronic circuits against damage from electrostatic discharge (ESD) events
- Assists equipment to pass IEC 61000-4-2, level 4 testing

FEATURES

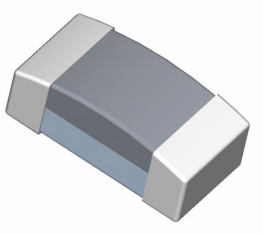

- 0.25 pF (typ) Capacitance
- Low leakage current
- Low clamping voltage
- Fast response time (<1ns)
- Capable of withstanding numerous ESD strikes
- Compatible with standard reflow installation procedures
- Thick film technology
- Bi-directional protection

APPLICATIONS

- HDMI 1.3 interface
- LCD, HDTV
- Cellular phones
- Antennas (cell phones, GPS…)
- Portable video devices (PDA, DSC, Bluetooth…)
- Printer ports
- High speed Ethernet
- USB 2.0 and IEEE 1394 interfaces
- DVI interface

CAUTION: This device should not be used in Power Bus applications

MATERIALS INFORMATION

RoHS Compliant	ELV Compliant	Halogen Free*	Lead-Free
Directive 2002/95/EC Compliant	Directive 2000/53/EC Compliant	Pb	HF

© 2016 Littelfuse,Inc
Specifications are subject to change without notice.
Revised July 26,2016

PART NUMBERING

PESD 0603 - 240

Series

EIA Size

Operating Voltage Designator

$24 \times 10^0 = 24V_{DC}$

* Halogen Free refers to: Br≤900ppm, Cl≤900ppm, Br+Cl≤1500ppm

TYPICAL DEVICE RATINGS AND CHARACTERISTICS

	Max Operating Voltage	Typical TLP Trigger Voltage[1]	Typical TLP Clamping Voltage[1] after 30ns	Typical Capacitance[2] @ 1 MHz, $1V_{rms}$	Typical Leakage Current @$24V_{DC}$	Max Leakage Current @$24V_{DC}$
Symbol	V_{DC}	$V_{T(TLP)}$	$V_{C(TLP\ 30)}$	Cp	$I_{L(Typ)}$	$I_{L(MAX)}$
Unit	V	V	V	pF	µA	µA
Value	24	215	45	0.25	<0.01	10.0

Note 1: TLP test method at 1000V (refer to FIG. 5 on page 5)
Note 2: Typical capacitance @ 0V and 24V

GENERAL CHARACTERISTICS

Operating temperature: -55°C to +125°C
Storage temperature: -55°C to +125°C

ESD voltage capability (tested per IEC 61000-4-2)

- Contact discharge mode: 8kV (typ), 15kV (max)
- Air discharge mode: 15kV (typ), 25kV (max) [1 pulse: per customer request]

ESD pulse withstand: Typically 500 pulses (tested per IEC 61000-4-2, level 4, and contact method)

Environmental Specifications

	Bias Humidity Test	Thermal Shock	Bias Heat Test	Bias Low Temp Test	Solderability	Solder Heat	Vibration	Mechanical Shock	Solvent Resistance
Test Conditions	@ 85ºC @ 85% RH V_{DC} (max) 1000 hours	-55ºC to 125ºC 30min dwell 1000 cycles	@ 125ºC V_{DC} (max) 1000 hours	@ -55ºC V_{DC} (max) 1000 hours	250 ºC +/- 5 ºC 3s +/- 1s	260 ºC, 10s	10 to 50Hz, 60s cycle, 2hrs each in X-Y-Z axis	1500G, 0.5ms, X-Y-Z axis 3 times	IPA ultrasonic 300s
Pass/Fail Criteria	I_L≤10µA	I_L≤10µA	I_L≤10µA	I_L≤10µA	95% coverage	90% coverage	No Physical Damage I_L ≤ 10 µA	No Physical Damage I_L ≤ 10 µA	No Physical Damage I_L ≤ 10 µA

© 2016 Littelfuse,Inc
Specifications are subject to change without notice.
Revised July 26,2016

FIG 1: CAPACITANCE VS. FREQUENCY (TYPICAL SAMPLE)

(PESD0603 Flat Response of Capacitance over Frequency Range)

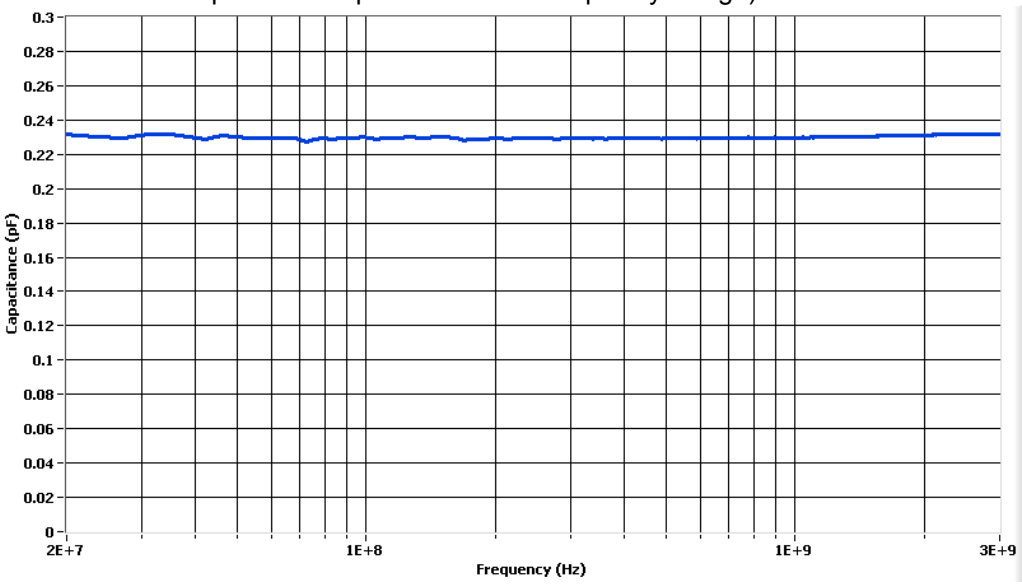

FIG 2: EYE DIAGRAM (TYPICAL SAMPLE)

(PESD0603 Eye Diagram Performance at 3.4 GHz— meets criteria for HDMI 1.3)

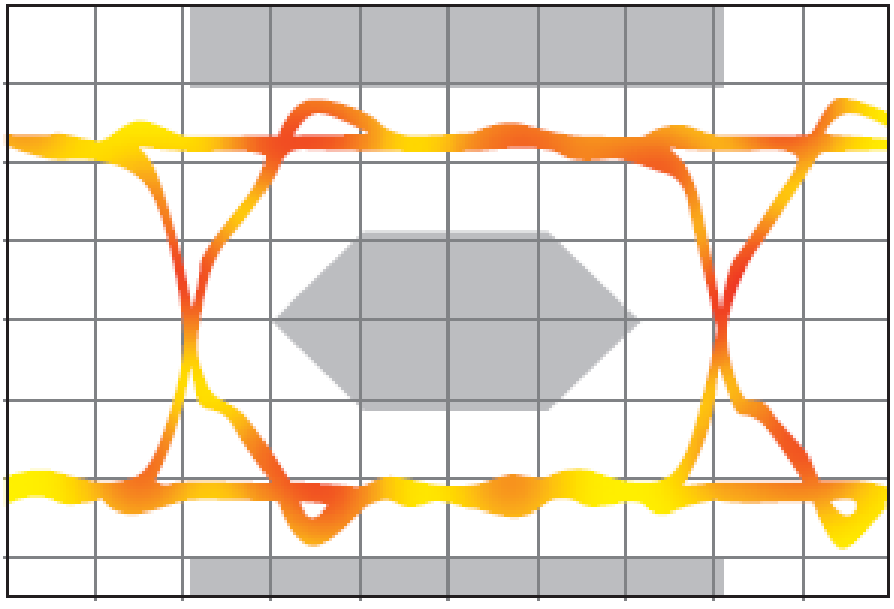

© 2016 Littelfuse,Inc
Specifications are subject to change without notice.
Revised July 26,2016

FIG 3: INSERTION LOSS DIAGRAM (TYPICAL SAMPLE)

(PESD0603 Minimal Insertion Loss at 3.4 GHz)

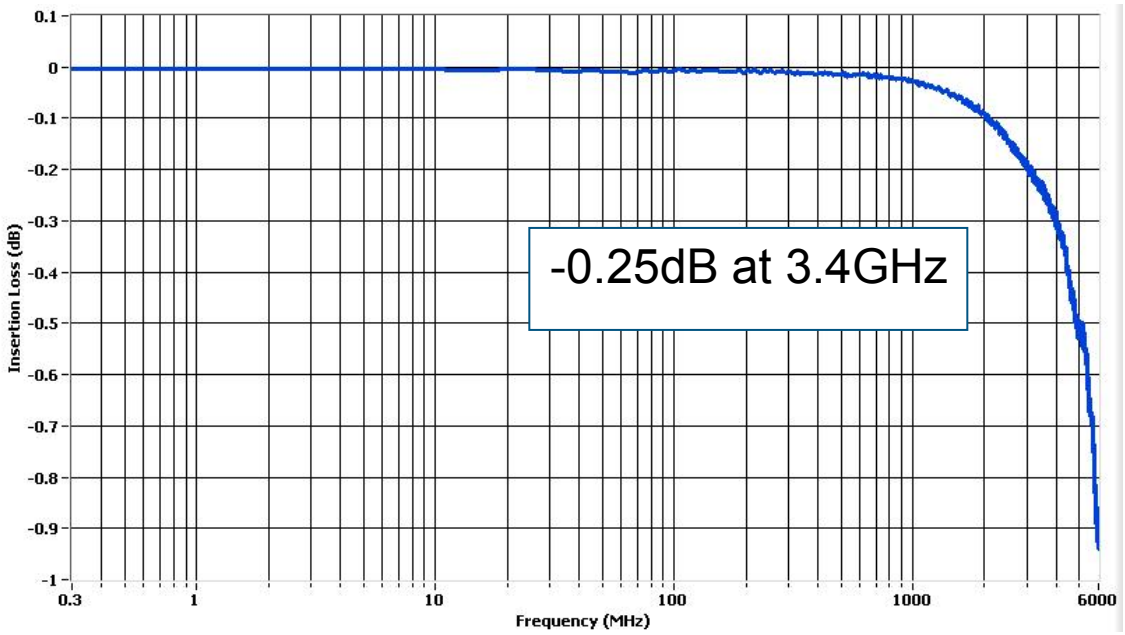

FIG 4: ESD PROTECTION FOR HDMI

(PESD0603 Reference Layout and Test Results available)

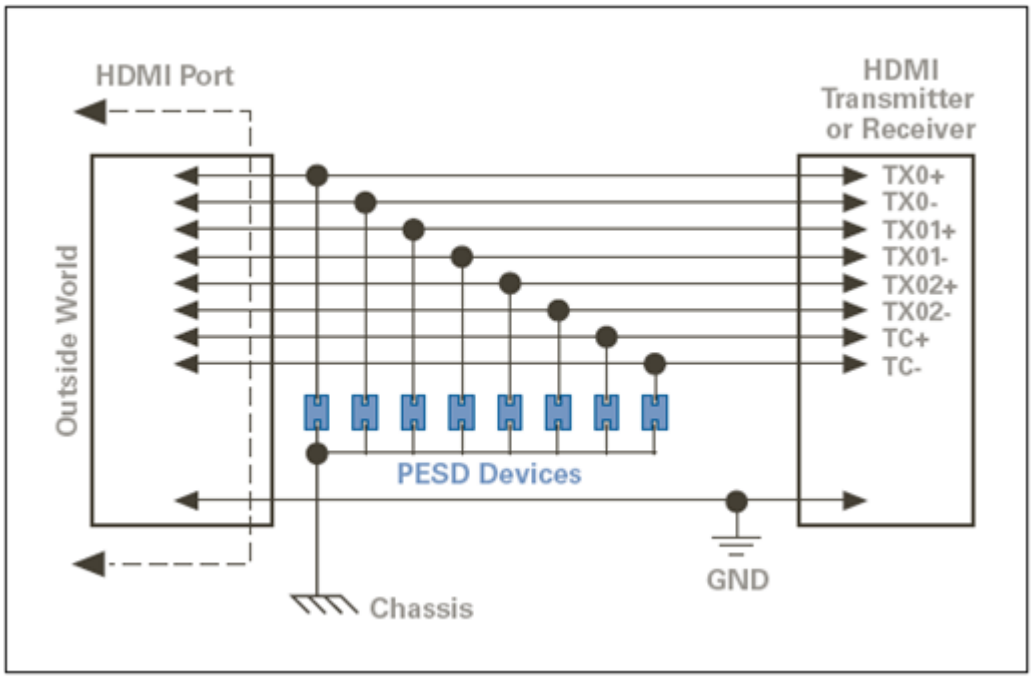

© 2016 Littelfuse,Inc
Specifications are subject to change without notice.
Revised July 26,2016

FIG 5:TYPICAL TRANSMISSION LINE PULSE RESPONSE GRAPH

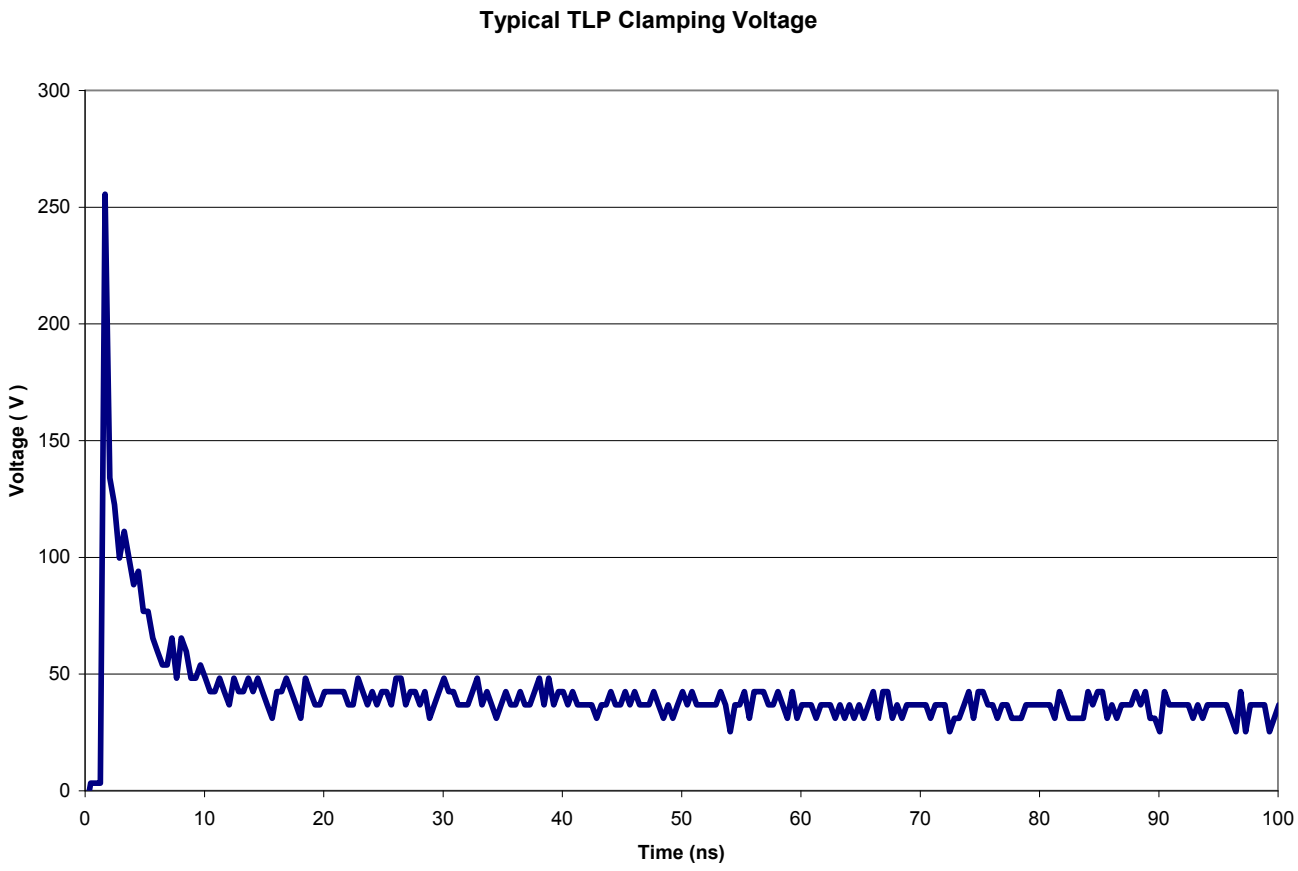

© 2016 Littelfuse,Inc
Specifications are subject to change without notice.
Revised July 26,2016

DIMENSIONS

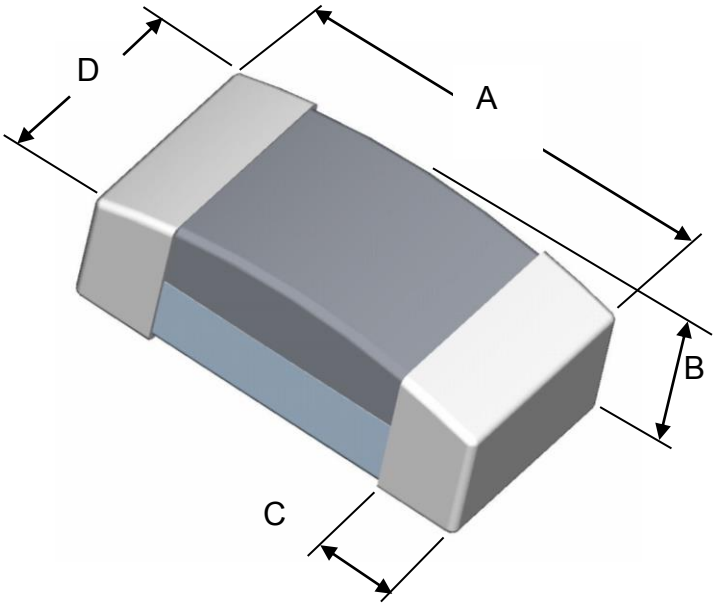

Drawing Not To Scale

	Length A		Height B		Terminal Width C		Width D	
	Min	Max	Min	Max	Min	Max	Min	Max
mm	1.50	1.70	0.45	0.55	0.10	0.50	0.70	0.95
in*	(0.059)	(0.067)	(0.018)	(0.022)	(0.004)	(0.020)	(0.028)	(0.037)

* Round off approximation

RECOMMENDED LAND PATTERN:

Solder thickness 0.15 to 0.2mm

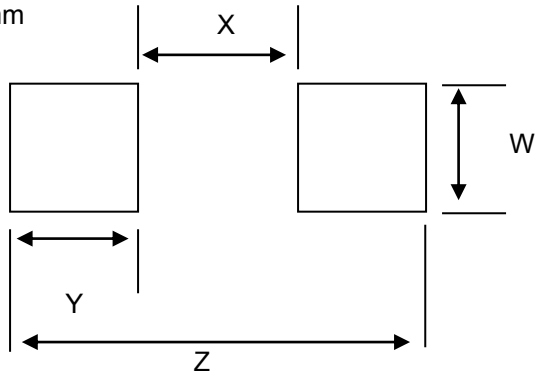

© 2016 Littelfuse,Inc
Specifications are subject to change without notice.
Revised July 26,2016

	W		X		Y		Z	
	Min	Max	Min	Max	Min	Max	Min	Max
mm	0.90	1.00	0.50	0.60	1.00	1.10	2.70	2.80
in*	(0.035)	(0.039)	(0.020)	(0.024)	(0.039)	(0.043)	(0.106)	(0.110)

* Round off approximation

SOLDER REFLOW RECOMMENDATIONS:

A	Temperature ramp up 1	From ambient to Preheating temperature	30s to 60s
B	Preheating	140°C - 160°C	60s to 120s
C	Temperature ramp up 2	From Preheating to Main heating temperature	20s to 40s
D	Main heating	at 200°C at 220°C at 240°C at 260°C	60s ~ 70s 50s ~ 60s 30s ~ 40s 5s ~ 10s
E	Cooling	From main heating temperature to 100°C	max 4°C/s

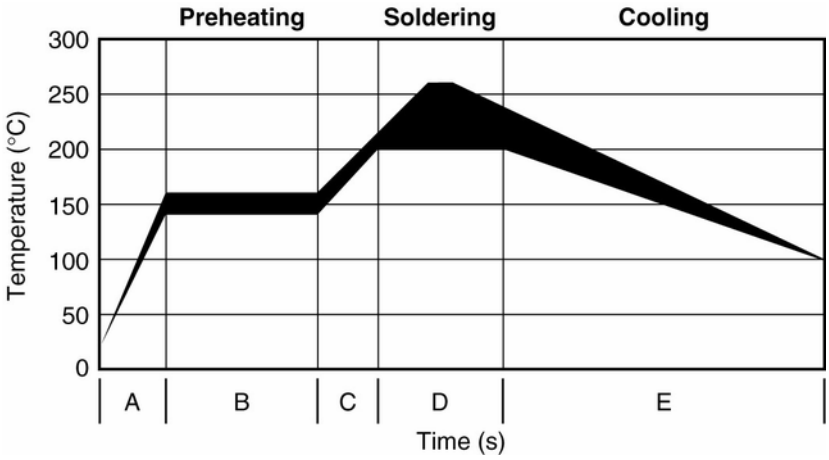

© 2016 Littelfuse,Inc
Specifications are subject to change without notice.
Revised July 26,2016

PACKAGING

Packaging	Tape & Reel	Standard Box
PESD0603-240	5,000	25,000

EIA referenced Reel Dimensions for PESD Devices

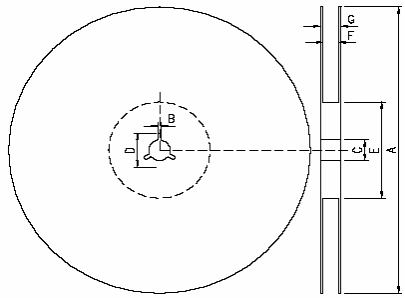

Reel Dimensions (mm):

	A	B	C	D	E	F	G
0603 Devices	178.0 ±2.0	2.0 ±0.5	13.0±0.5	21.0±0.8	62.0±1.5	9.0±0.5	13.0±1.0

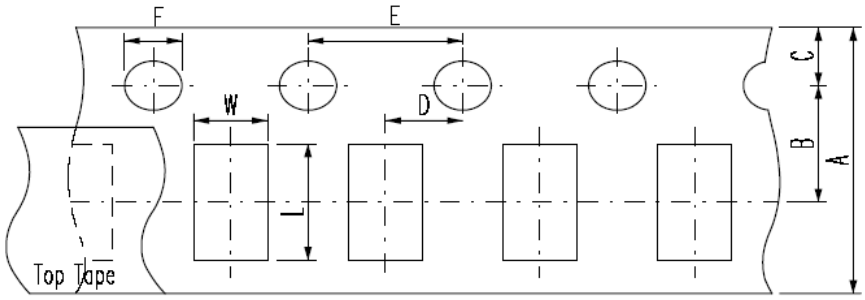

Carrier Dimensions (mm):

	A	B	C	D	E	F	L	W	T[1]
0603 Devices	8.0±0.3	3.5±0.05	1.75±0.1	2.0±0.05	4.0±0.1	1.5±0.1	2.02±0.20	1.27±0..15	0.60±0.03

Note 1: Carrier thickness

Product Orientation – always face up (meaning the substrate is at the bottom), but parts do not have polarity mark.

© 2016 Littelfuse,Inc
Specifications are subject to change without notice.
Revised July 26,2016

Leader & Trailer: The leader is 180mm in length & consists of empty cavities with sealed cover tape.
The trailer is 350mm in length & consists of empty cavities with sealed cover tape.

POST REFLOW, CLEANING CONDITIONS

A 5% saponifier combined with water during wash.

For the ultrasonic process water temperature should be at 50°C and board should be submerged for a minimum of one minute in the solutions, then rinse and dry.

For in-line washing, the temperature of the water sprayed should be at 110°C, rinse and drying is done in-line.

WARNING

Warning: Application Limitations for PESD0603-240. This part is not intended to be used on power lines or for power bus applications. Users should independently evaluate the suitability of and test each product selected for their own applications

Information furnished is believed to be accurate and reliable. However, users should independently evaluate the suitability of and test each product selected for their own applications. Littelfuse products are not designed for, and shall not be used for, any purpose (including, without limitation, military, aerospace, medical, lifesaving, life-sustaining or nuclear facility applications, devices intended for surgical implant into the body, or any other application in which the failure or lack of desired operation of the product may result in personal injury, death, or property damage) other than those expressly set forth in applicable Littelfuse product documentation
Warranties granted by Littelfuse shall be deemed void for products used for any purpose not expressly set forth in applicable Littelfuse documentation. Littelfuse shallnot be liable for any claims or damages arising out of products used in applications not expressly intended by Littelfuse as set forth in applicable Littelfuse documentation The sale and use of Littelfuse products is subject to Littelfuse Terms and Conditions of Sale, unless otherwise agreed by Littelfuse.