DO NOT SCALE REMOVE ALL BURRS AND SHARP EDGES	1st ANGLE PROJECTION	UNLESS NOTED OTHERWISE, ALL DIMENSIONS ARE IN MILLIMETRES	THIS DESIGN IS COPYRIGHT AND THE DRAWING IS THE PROPERTY OF UNISTRUT LIMITED AND IS TO BE USED BETWEEN CLIENTS AND THEMSELVES ONLY.

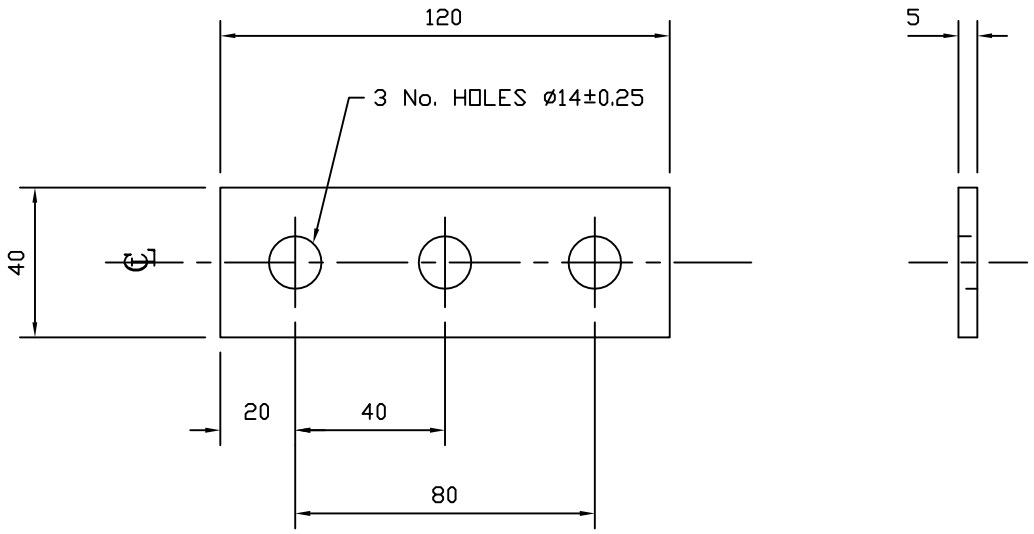

NOTES:

REV & DATE	DESCRIPTION	CHK'D & DATE

tyco / TYCO ELECTRICAL & METAL PRODUCTS / Unistrut

Delta Point, Greets Green Road,
West Midlands,B70 9PL
Tel: 0121 580 6300
Fax: 0121 580 6366

FM 825 – BS EN ISO 9001

RELATED PART NO.(S)			
TOLERANCES U.N.O. DIMS. ± 1mm ANGLES ± 0.5°	DRAWN/DATE: JRD 8/6/76 DISK No:	CHECKED/DATE: AJ 13/4/78	SCALE: 1:2 @ A4

TITLE: 3 HOLE FLAT PLATE

PART No: P1066 P1066P P1066SS

REV: G