LOVATO ELECTRIC S.P.A.
24020 GORLE (BERGAMO) ITALIA
VIA DON E. MAZZA, 12
TEL. 035 4282111
TELEFAX (Nazionale): 035 4282200
TELEFAX (International): +39 035 4282400
Web www.LovatoElectric.com
E-mail info@LovatoElectric.com

I422GB03_15

GB

DMG100 – DMG110

Digital multimeter

OPERATING MANUAL



WARNING!

- Read the manual carefully before installation and use.
- These devices must be installed by qualified personnel, in compliance with current plant-engineering regulations, in order to avoid damage to persons or property.
- Before any intervention on the instrument, disconnect voltage from the measurement and supply inputs and short-circuit the current transformers.
- The manufacturer assumes no responsibility for electrical safety in the event of improper use of the device.
- The products described in this document are subject to updates or modifications at any time. Descriptions and information in the catalogue consequently have no contractual relevance.
- The building's electrical system must incorporate a switch or circuit breaker. It must be located in close proximity to the equipment and be easy for the operator to reach. It must be marked as the equipment's disconnecting device: IEC/ EN 61010-1 § 6.11.2.
- Clean the instrument with a soft cloth. Do not use abrasives, liquid detergents or solvents.

Contents

Contents	Page
Introduction	1
Description	2
Front button functions	2
Display indications	2
Displaying measurements	2
Table of display pages	4
Navigating between the display pages	6
Harmonic analysis indication	7
Energy meter indication	7
Hour counter indication	7
Limit threshold status indication (LIMn)	8
Alarm indication	8
Main menu	9
Setting parameters (set-up) from the front panel	9
Parameter table	11
Commands menu	14
Connection test	14
Connection schemes	15
Terminal layout	16
Mechanical dimensions and panel cut-out (mm)	17
Technical specifications	17
Manual revision history	18

Introduction

DMG100 and DMG110 multimeters are designed to combine the utmost ease of use with a wide range of advanced functions. Despite the extremely limited dimensions of the modular housing (just 4 modules), the multimeter features the same performance as a high-level device. The backlit LCD display permits a clear and intuitive user interface. The DMG110 also features an isolated RS-485 communication interface with Modbus protocol to permit supervision.

Description

- Three-phase digital multimeter.
- 4U (72 mm) modular housing for DIN rail.
- Backlit LCD display.
- Versions:
  - DMG100 - standard version.
  - DMG110 - with built-in RS485 interface.
- 4 navigation buttons for functions and settings.
- High-accuracy true root mean square (TRMS) measurement.
- Vast range of available measurements, including voltage and current THD and harmonic analysis.
- Wide range auxiliary power supply (100–240 VAC).
- 2-level password protection for settings.
- Backup copy of original settings.
- Fitting does not require tools.
- Texts in 6 languages.

Front button functions

MENU button – Used to enter or exit the various display and set-up menus.
▲ and ▼ buttons – Used to scroll between screens, select from available options on the display and change (increase/decrease) settings.
↻ **button** – Used to scroll sub-pages, confirm selected options and switch between display modes.

Display indications

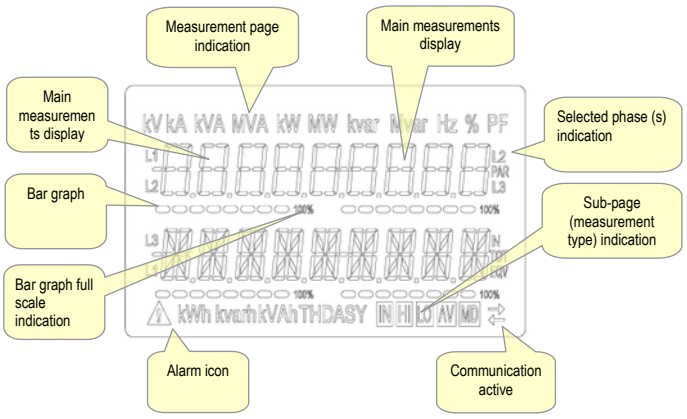

Displaying measurements

- The ▲ and ▼ buttons allow the measurement display pages to be scrolled one at a time. The current page can be recognized through the unit of measurement shown in the top part of the display.
- Some measurements may not be displayed, depending on the programming and the connection for the device (for example, if programmed for a system without neutral, the measurements relating to neutral are not displayed).
- For every page, the ↻ button permits access to sub-pages (for example, to display the maximum and minimum values recorded for the selected measurement).
- The sub-page displayed currently is indicated at the bottom right by one of the following icons:
  - **IN = Instantaneous value** – Current instantaneous value of the measurement, displayed by default every time the page is changed.
  - **HI** = **Maximum instantaneous value** – Highest value measured by the multimeter for the corresponding measurement. HIGH values are stored and preserved even in the absence of a power supply. They can be reset through a dedicated command (see commands menu).
  - **LO = Minimum instantaneous value** – Lowest value measured by the multimeter from the moment voltage is applied. It is reset with the same command used for the HI values.
  - **AV = Average value** – Time-integrated (average) value of measurement. Permits display of a measurement with slow variations. See Integration menu.
  - **MD = Maximum Demand** – Peak integrated value (max demand). Remains stored in non-volatile memory and can be reset with a dedicated command.

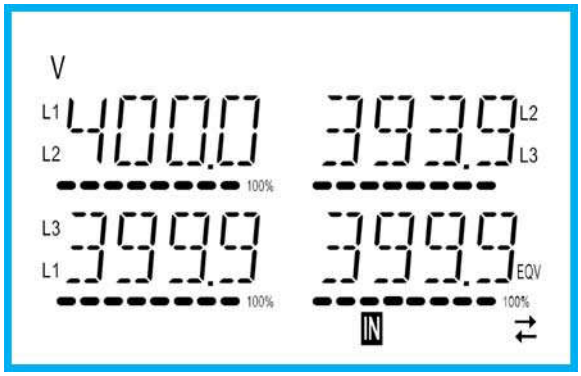

- The user can choose the page and sub-page that the display returns to automatically after a certain time has elapsed without the buttons being pressed.
- It is also possible to program the multimeter so that the display always remains that which was last selected.
- For the set-up of these functions, see the P02 – Utility menu.

Table of display pages

No.	Selection with ▲ and ▼ PAGES	Selection with ↻ SUB-PAGES			
1	**PHASE-TO-PHASE VOLTAGES** V(L1-L2), V(L2-L3), V(L3-L1), V(LL)EQV	HI	LO	AV	
2	**PHASE-TO-NEUTRAL VOLTAGES** V(L1-N), V(L2-N), V(L3-N), V(L-N)EQV	HI	LO	AV	
3	**PHASE AND NEUTRAL CURRENTS** I(L1), I(L2), I(L3), I(N)	HI	LO	AV	MD
4	**ACTIVE POWER** P(L1), P(L2), P(L3), P(TOT)	HI	LO	AV	MD
5	**REACTIVE POWER** Q(L1), Q(L2), Q(L3), Q(TOT)	HI	LO	AV	MD
6	**APPARENT POWER** S(L1), S(L2), S(L3), S(TOT)	HI	LO	AV	MD
7	**POWER FACTOR** PF(L1),PF(L2),PF(L3),PF(EQ)	HI	LO	AV	
8	**ACTIVE POWER UNBALANCE** L1-L2, L2-L3, L3-L1	HI	LO	AV	
9	**FREQUENCY** Hz	HI	LO	AV	
10	**ASYMMETRY** ASY(VLL)	HI	LO	AV	
11	**ASYMMETRY** ASY(VLN)	HI	LO	AV	
12	**ASYMMETRY** ASY(I)	HI	LO	AV	
13	**PH-PH VOLTAGE HARM. DISTORTION** THD-V(L1-L2), THD-V(L2-L3), THD-V(L3-L1)	HI	LO	AV	
14	**VLL HARMONICS**	H2...H15			
15	**PH-N VOLTAGE HARMONIC DISTORTION** THD-V(L1),THD-V(L2),THD-V(L3)	HI	LO	AV	
16	**VLN HARMONICS**	H2...H15			
17	**CURRENT HARMONIC DISTORTION** THD-I(L1), THD-I(L2) THD-I(L3)	HI	LO	AV	
18	**CURRENT HARMONICS**	H2...H15			
19	**IMP. ACTIVE ENERGY METERS** kWh+(SYS) PAR kWh+(SYS) TOT				
20	**EXP. ACTIVE ENERGY METERS** kWh-(SYS) PAR kWh-(SYS) TOT				
21	**IMP. REACTIVE ENERGY METERS** kvarh+(SYS) PAR kvarh+(SYS) TOT				
22	**EXP. REACTIVE ENERGY METERS** Kvarh-(SYS) PAR Kvarh-(SYS) TOT				
23	**APPARENT ENERGY METERS** kvah(SYS) PAR kvah(SYS) TOT				
24	**ENERGY METERS (L1)** kWh+(L1) PAR kWh+(L1) TOT				
25	**ENERGY METERS (L2)** kWh+(L2) PAR kWh+(L2) TOT				
26	**ENERGY METERS (L3)** kWh+(L3) PAR kWh+(L3) TOT				
27	**ENERGY METERS (L1)** kWh-(L1) PAR kWh-(L1) TOT				
28	**ENERGY METERS (L2)** kWh-(L2) PAR kWh-(L2) TOT				
29	**ENERGY METERS (L3)** kWh-(L3) PAR kWh-(L3) TOT				
30	**ENERGY METERS (L1)** kvarh+(L1) PAR kvarh+(L1) TOT				
31	**ENERGY METERS (L2)** kvarh+(L2) PAR kvarh+(L2) TOT				
32	**ENERGY METERS (L3)** kvarh+(L3) PAR kvarh+(L3) TOT				

33	**ENERGY METERS (L1)** kvarh-(L1) PAR kvarh-(L1) TOT				
34	**ENERGY METERS (L2)** kvarh-(L2) PAR kvarh-(L2) TOT				
35	**ENERGY METERS (L3)** kvarh-(L3) PAR kvarh-(L3) TOT				
36	**HOUR COUNTER** hhhhhh mm ss	**TOT**	**PAR**		
37	**LIMIT THRESHOLD** LIM1–LIM2–LIM3–LIM4				
38	**ALARMS** ALA1–ALA2–ALA3–ALA4				
39	**INFO-REVISION-SERIAL NO.** MODEL, REV SW, REV HW, SER. No.				

Note: The pages highlighted in grey in the above table may not be displayed if the function or parameter that controls them is not enabled. For example, if no alarm is programmed, the corresponding page is not displayed.

Navigating between the display pages

Phase-to-phase voltages

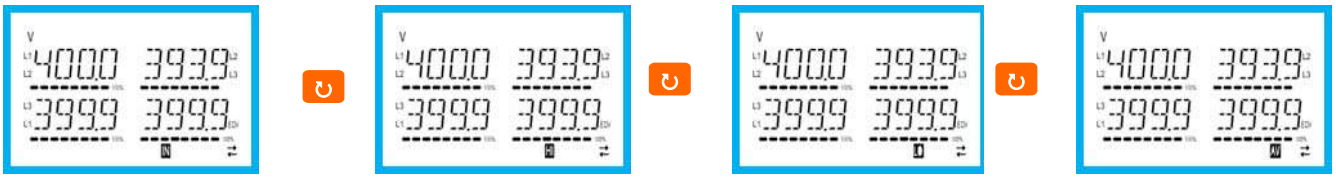

IN = Instantaneous value | **HI** = Maximum value | **LO** = Minimum value | **AV** = Average value

▼ ▲

Phase-to-neutral voltages

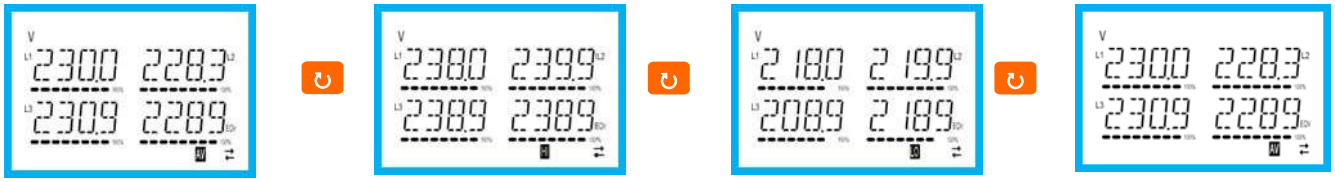

IN = Instantaneous value | **HI** = Maximum value | **LO** = Minimum value | **AV** = Average value

▼ ▲

Phase and neutral currents

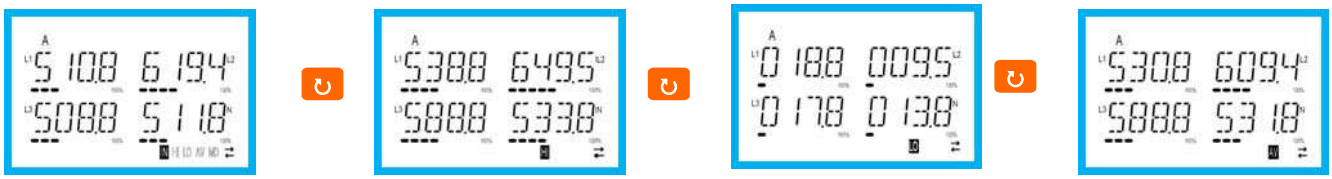

IN = Instantaneous value | **HI** = Maximum value | **LO** = Minimum value | **AV** = Average value

▼ ▲

Active power phase and total



IN = Instantaneous value | **HI** = Maximum value | **LO** = Minimum value | **AV** = Average value



MD = Max Demand value

(cont.)

...

Harmonic analysis indication

- The DMG100-110 features harmonic phase analysis up to the 15th order for the following measurements:
  - phase-to-phase voltages
  - phase-to-neutral voltages
  - currents
- To activate harmonic analysis, parameter P02.12 must = THD/HAR.
- With P02.12 = THD, only the THD of the above measurements is displayed.

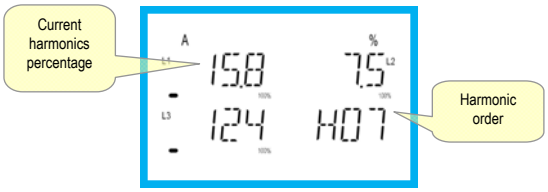

Energy meter indication

- There are five dedicated pages for energy meters.
  - Imported and exported active energy
  - Inductive or capacitive reactive energy
  - Apparent energy.
- Each page displays the total and partial value (can be reset from commands menu).
- If the unit of measurement is displayed continuously, it means that the meter is for imported energy (positive). Display of exported (negative) energies can be enabled as well by setting parameter P02.09 to ON. These energies are highlighted by the flashing of the unit of measurement, and are displayed after the imported energies by pressing ▼ .



Imported active energy



Exported active energy

- If display of energy by individual phase is enabled (P02.10=ON), three independent additional pages, one per phase, will be displayed for each power, including total and partial energy.

Hour counter indication

- If the hour counter is enabled (see menu P05), the DMG100-110 displays the hour counter page, with the format indicated in the figure:



Limit threshold status indication (LIMx)

- If the limit thresholds are enabled (see menu P08), the DMG100-110 displays the page, with the corresponding status and the format indicated in the figure:



- With limit threshold activated, the word ON flashes, while if it is deactivated the word OFF is constant. If no limit threshold is programmed, dashes are displayed.

Alarm indication

- If alarms are enabled (see menu P09), the DMG100-110 displays the page, with the corresponding status and the format indicated in the figure:

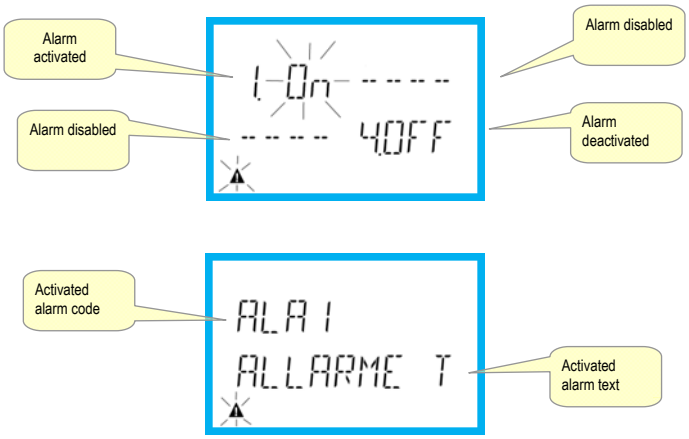

- With Alarm activated, the word ON flashes with the triangle symbol, while if it is not activated the word OFF is constant.
- If no alarm is programmed, dashes are displayed. After about 3 s, the scrolling text of the alarm programmed in parameter P09.n.05 appears.
- With several alarms active, the text of the corresponding alarm alternates on the display.
- Dedicated parameter P02.14 for the utility menu can be used to make the display backlighting flash in the event of an alarm to highlight the presence of the fault.
- The alarm reset method depends on parameter P09.n.03. This determines whether it can be automatic, on the disappearance of the alarm conditions, or requires manual intervention through the commands menu (C.07).

Main menu

To access the main menu:

- Press the **MENU** button. The main menu is displayed (see figure), with the available options:
  - SET – Access to the set-up menu
  - CMD – Access to the commands menu
  - PAS – Password entry
- The selected option flashes. Descriptive text for the selection scrolls in the alphanumeric display.
- If the password needs to be set, the menu opens with the option PAS already selected.
- Press ▲ ▼ to select the desired option, then ↻ to confirm.
- To return to the measurement display, press MENU again.

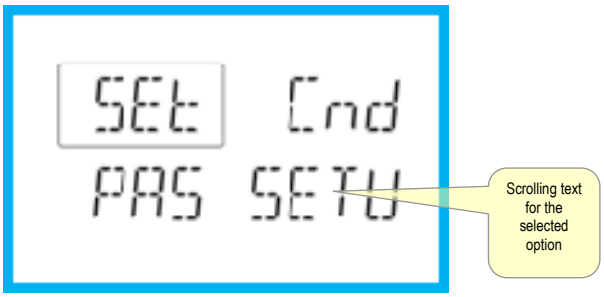

Setting parameters (set-up) from the front panel

- From the standard measurement display, press **MENU** to call up the main menu, then select SET and press ↻ to access the settings menu.
- The display indicates the first menu level P.01 at the bottom left of the display, with selection 01 flashing.
- Select the desired menu (P.01, P.02, P.03) using the ▲▼ buttons. During selection, the alphanumeric display scrolls a brief description of the currently selected menu.
- To exit and return to the measurement display, press **MENU**.



Set-up: menu selection

- The following menu lists the available menus:

Cod.	MENU	DESCRIPTION
P01	GENERAL	Specifications of the system
P02	UTILITY	Language, brightness, display, etc.
P03	PASSWORD	Enablement of protected access
P04	INTEGRATION	Measurement integration times
P05	HOUR COUNTER	Enablement of hour counter
P07	COMMUNICATION	Communication ports (DMG110)
P08	LIMIT THRESHOLDS (LIMn)	Measurement thresholds
P09	ALARMS (ALAn)	Alarm messages

- Press ↻ to access the selected menu.
- At this point the sub-menu (if applicable) and sequential parameter number can be selected, again using the buttons as follows:





Set-up: selecting the parameter number

- Once the desired parameter number is set, ↻ switches to parameter value edit mode, with the parameter shown in the alphanumeric display.
- Pressing ▲ or ▼ changes the parameter within the permitted range.
- Pressing ▲ and ▼ simultaneously restores the factory default value.
- Pressing ▼ and ↻ simultaneously sets the minimum possible value, while pressing ▲ and ↻ sets the maximum.



Setting the parameter value

- Pressing **MENU** stores the parameter and returns to the previous level, i.e. parameter selection.
- Press **MENU** several times to exit and save the parameters. The device will reboot.
- Alternatively, from within programming, holding down **MENU** continuously for three seconds saves changes and exits directly.
- If no buttons are pressed for two minutes, the set-up menu is abandoned automatically and the system returns to the standard display without saving the parameters.
- Remember that, solely for the data that can be edited using the buttons, a backup copy can be made in the DMG100-110's EEPROM. If required, this data can be restored to the working memory. The backup and date restore commands are in the *commands menu*.

Parameter table

- All available programming parameters are indicated in the following table. For each parameter the range of possible settings and factory default are shown, in addition to an explanation of the parameter's function. The description of the parameter visible on the display may in some cases vary from that indicated in the table due to the limited number of characters available. The parameter code is a valid reference in any case.

P01 – GENERAL		UoM	Default	Range
P01.01	CT primary	A	5	1-10000
P01.02	CT secondary	A	5	1-5
P01.03	Rated voltage	V	400	50-500000
P01.04	Use VT		OFF	OFF-ON
P01.05	VT primary	V	100	50-500000
P01.06	VT secondary	V	100	50-500
P01.07	Connection type		L1-L2-L3-N	L1-L2-L3-N L1-L2-L3 L1-L2-L3-N BIL L1-L2-L3 BIL L1-N-L2 L1-N

P01.01 – Rated current of CT primary winding.
P01.02 – Current of CT secondary winding.
P01.03 – Rated voltage of system.
P01.04 – Program as ON if CTs are used. If programmed as OFF, the next two parameters are ignored.
P01.05 – Rated voltage of CT primary winding.
P01.06 – Rated voltage of CT secondary winding.
P01.07 – Set in accordance with the connection scheme adopted. See Connection Schemes at the end of the manual.

P02 – UTILITY		UoM	Default	Range
P02.01	Language		English	English Italiano Francais Espanol Portuguese Deutsch
P02.02	High backlight level	%	100	0-100
P02.03	Low backlight level	%	30	0-50
P02.04	Low backlight delay	s	30	5-600
P02.05	Default page return	s	60	OFF / 10-600
P02.06	Default page		VL-L	VL-L / VL-N …
P02.07	Default sub-page		INST	INST / HI / LO / AVG / MD
P02.08	Display update time	s	0.5	0.1 – 5.0
P02.09	Exported energy measure		OFF	OFF-ON
P02.10	Phase energy measure		OFF	OFF-ON
P02.11	Asymmetry measure		OFF	OFF-ON
P02.12	THD/harmonic measure		OFF	OFF-THD-THD/HAR
P02.13	Power unbalance measurement		OFF	OFF-ON
P02.14	Backlight flash when in alarm		OFF	OFF-ON

P02.05 – If set to OFF, the display always remains on the page where the user left it. If set to a value, after this time the display returns to the page set with P02.06.
P02.06 – Number of the page that the display returns to automatically once the time P02.05 since a button was last pressed has elapsed.
P02.07 – Type of sub-page that the display returns to after P02.05 has elapsed.
P02.09 – Enables the measurement and display of exported energies (generated in the mains).
P02.10 – Enables the measurement and display of energies by individual phase.
P02.11 – Enables the measurement and display of voltage and current asymmetry.
P02.12 – Enables the measurement and display of voltage and current THDs (% Harmonic Distortion).
P02.13 – Enables the calculation and display of phase power unbalance.
P02.14 – When there is an alarm, the display's backlight flashes to highlight the fault.

P03 – PASSWORD		UoM	Default	Range
P03.01	Enable passwords		OFF	OFF-ON
P03.02	User level password		1000	0-9999
P03.03	Advanced level password		2000	0-9999

P03.01 – If set to OFF, password management is disabled and there is free access to settings and the commands menu.
P03.02 – With P03.01 active, value to specify to activate user-level access. See Password Access section.
P03.03 – As P03.02, with reference to advanced-level access.

P04 – INTEGRATION		UoM	Default	Range
P04.01	Integration mode		Shift	Fixed Shift Bus (DMG110)
P04.02	Power integration time	min	15	1-60
P04.03	Current integration time	min	15	1-60
P04.04	Voltage integration time	min	1	1-60
P04.05	Frequency integration time	min	1	1-60

P04.01 – Integrated measurement calculation mode selection.
Fixed = The instantaneous measurements are integrated for the time set. Each time that the time set elapses, the integrated measurement is updated with the result of the latest integration.
Shift = The instantaneous measurements are integrated for a time = 1/15 of the time set. Each time this interval elapses, the oldest value is replaced with the new value calculated. The integrated measurement is updated every 1/15 of the time set, considering a time-shift window that includes the last 15 values calculated, equivalent in length to the time set.
Bus = As fixed mode, but the integration intervals are dictated by synchronisation messages sent on the serial bus. (110)
P04.02 – Average (AVG) measurement integration time for active, reactive and apparent power.
P04.03, P04.04, P04.05 – Average (AVG) measurement integration time for the corresponding values.

P05 – HOUR COUNTER		UoM	Default	Range
P05.01	Hour counters general enable		ON	OFF-ON
P05.02	Partial hour counter enable		ON	OFF-ON-LIMx
P05.03	Channel number (x)		1	1-4

P05.01 – If Off, the hour counters are disabled and the hour counter measurement page is not displayed.
P05.02 – If OFF, the partial hour counter is not incremented. If ON, it is incremented when the multimeter is supplied. If linked to one of the internal variables (LIMn), it is incremented only when this condition is true.
P05.03 – Channel number (x) of any internal variable used in the previous parameter. Example: If the partial hour counter needs to count the time that a measurement is above a certain threshold, defined by LIM3, program LIMx in the previous parameter and specify 3 in this parameter.

P07 – COMMUNICATION (DMG110 only)		UoM	Default	Range
P07.01	Serial node address		01	01-255
P07.02	Serial speed	bps	9600	1200 2400 4800 9600 19200 38400 57600 115200
P07.03	Data format		8 bit – n	8 bit, no parity 8 bit, odd 8bit, even 7 bit, odd 7 bit, even
P07.04	Stop bits		1	1-2
P07.05	Protocol		Modbus RTU	Modbus RTU Modbus ASCII

P07.n.01 – Serial address (node) for the communication protocol.
P07.n.02 – Communication port bitrate.
P07.n.03 – Data format. 7-bit settings available for ASCII protocol only.
P07.n.04 – Number of stop bits.
P07.n.05 – Communication protocol selection.

P08 – LIMIT THRESHOLDS (LIMn, n=1..4)		UoM	Default	Range
P08.n.01	Reference measure		OFF	OFF- (measures)
P08.n.02	Function		Max	Max – Min – Min+Max
P08.n.03	Upper threshold		0	-9999 - +9999
P08.n.04	Multiplier		x1	/100 – x10k
P08.n.05	Delay	s	0	0.0 – 1000.0
P08.n.06	Lower threshold		0	-9999 - +9999
P08.n.07	Multiplier		x1	/100 – x10k
P08.n.08	Delay	s	0	0.0 – 1000.0
P08.n.09	Normal status		OFF	OFF-ON
P08.n.10	Latch		OFF	OFF-ON

Note: this menu is divided into 4 sections, for limit thresholds LIM1..4

P08.n.01 – Defines which multimeter measurement the limit threshold is applied to.

P08.n.02 – Defines the function of the limit threshold. It can be:

Max = LIMn active when measurement exceeds P08.n.03. P08.n.06 is the reset threshold.

Min = LIMn active when measurement is below P08.n.06. P08.n.03 is the reset threshold.

Min+Max = LIMn active when measurement is above P08.n.03 or below P08.n.06.

P08.n.03 and P08.n.04 – Define the upper threshold, which results from multiplying value P08.n.03 by P08.n.04.

P08.n.05 – Trip delay on upper threshold.

P08.n.06, P08.n.07, P08.n.08 – as above, with reference to the lower threshold.

P08.n.09 – Permits inversion of the status of limit threshold LIMn.

P08.n.10 – Defines whether the threshold is stored and must be reset manually (ON) or is reset automatically (OFF).

P09 – ALARMS (ALAn, n=1..4)		Default	Range
P09.n.01	Alarm source	OFF	OFF-LIMx
P09.n.02	Channel number (x)	1	1-4
P09.n.03	Latch	OFF	OFF-ON
P09.n.04	Priority	Low	Low - High
P09.n.05	Text	ALAn	(text: 16 characters)

Note: this menu is divided into 4 sections, for alarms ALA1..4

P09.n.01 – Signal that causes the alarm. It can be when a threshold (LIMx) is exceeded.

P09.n.02 – Channel number (x), with reference to the previous parameter.

P09.n.03 – Defines whether the alarm is stored and must be reset manually (ON) or is reset automatically (OFF).

P09.n.04 – If the alarm has a priority of high, its activation switches the display to the alarm page automatically and it is displayed with the alarm icon. If instead it is set to low priority, the page does not change and it is displayed with the 'information' icon.

P09.n.05 – Free text for alarm. 16 characters max.

Commands menu

- The commands menu permits the execution of occasional operations such as resetting measurements, meters, counter, etc.
- If the advanced-access password has been entered, the commands menu can also be used to perform some automatic operations that are useful for configuring the instrument.
- The following table indicates the functions available through the commands menu, divided by required access level.

Cod.	COMMAND	ACCESS LEVEL	DESCRIPTION
C.01	RESET HI-LO	User / Advanced	Resets the HI and LO values of all measurements
C.02	RESET MAX DEMAND	User / Advanced	Resets Max Demand values for all measurements
C.03	RESET PARTIAL ENERGY METERS	User / Advanced	Resets partial energy meters
C.04	RESET PARTIAL HOUR COUNTER	User / Advanced	Resets partial hour counters
C.07	RESET ALARMS	User / Advanced	Resets alarms with latch
C.08	RESET LIMITS	User / Advanced	Resets limit thresholds with latch
C.11	RESET TOTAL ENERGY METER	Advanced	Resets total and partial energy meters
C.12	RESET TOTAL HOUR COUNTERS	Advanced	Resets total hour counters
C.13	PARAMETERS TO DEFAULT	Advanced	Restores all settings to factory default values
C.14	PARAMETER BACKUP	Advanced	Saves a backup copy of the settings
C.15	PARAMETERS RESTORE	Advanced	Reloads the settings from the backup copy
C.16	WIRING TEST	Advanced	Runs the test to check that the DMG is connected correctly. See *Connection Test section*

- Once the desired command is selected, press ↻ to execute it. The instrument will request confirmation. Pressing ↻ again will execute the command.
- To cancel the execution of a selected command, press **MENU**.
- To abandon the command menu, press **MENU.**

Connection test

- The connection test permits verification of the correct installation of the multimeter.
- In order to run the test, the multimeter must be connected to an active system with the following conditions:
  - three-phase system with all phases present (V > 50VAC PH-N)
  - minimum current flow in each phase > 1% of the CT full scale set
  - positive flow of energies (i.e. a normal system where the inductive load draws power from the supply)
- To launch the test, enter the commands menu and select command C.16, according to the instructions in the *Commands Menu* section.
- The test permits verification of the following:
  - reading of the three voltages
  - phase sequence
  - voltage unbalance
  - reverse polarity of one or more CTs
  - mismatch between voltage/current phases
- If the test is not passed, the display shows the reason for the failure.

Connection Schemes

3-phase connection whit or without neutral
P01.07 = L1-L2-L3-N L1-L2-L3

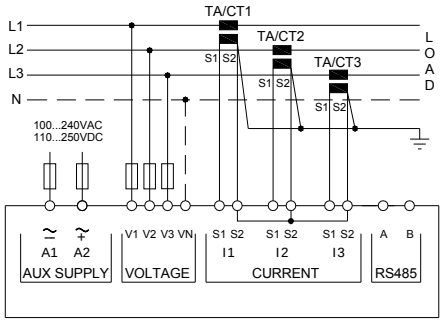

2-phase connection
P01.07 = L1-N-L2

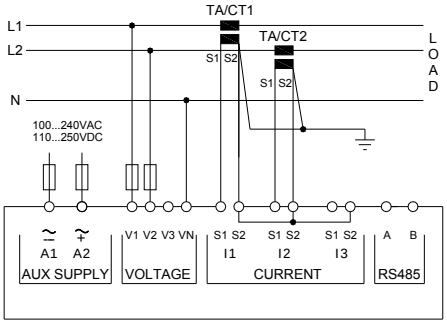

Single-phase connection
P01.07 = L1-N

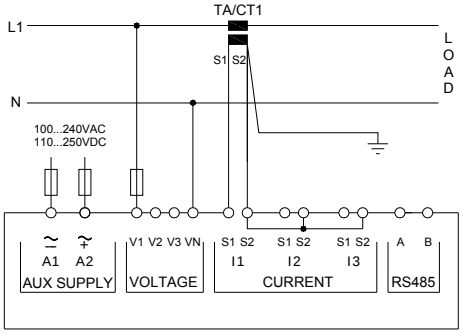

Balanced 3-phase connection whit or without neutral
P01.07 = L1-L2-L3-N-BIL L1-L2-L3-BIL

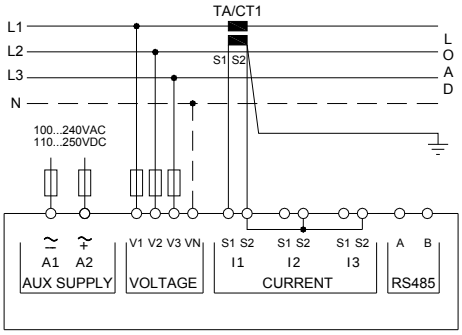

ARON connection 3-phase without neutral
P01.07 = L1-L2-L3

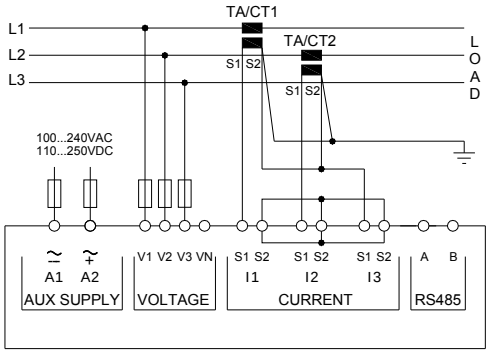

ARON connection 3-phase without neutral
P01.07 = L1-L2-L3

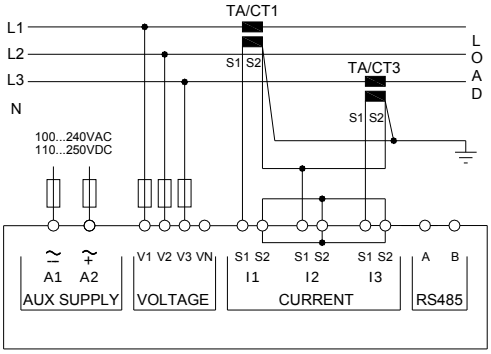

3 phase connection with neutral via VT
Set P01.04, P01.05 and P01.06
P01.07 = L1-L2-L3-N

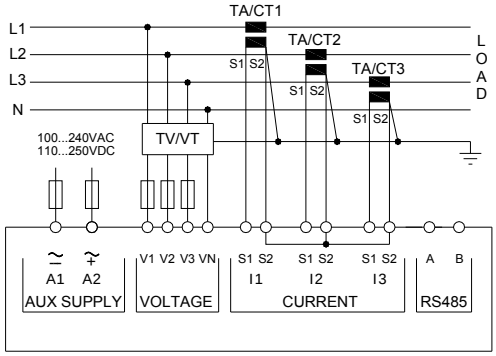

3 phase connection without neutral via VT
Set P01.04, P01.05 and P01.06
P01.07 = L1-L2-L3

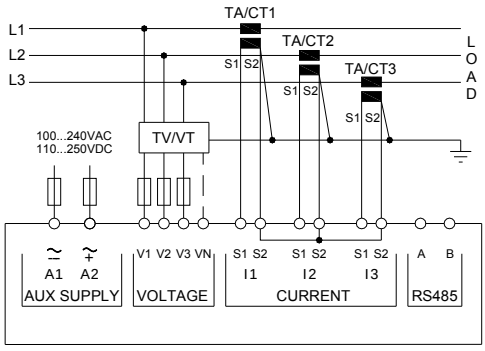

NOTES

1. Recommended fuses:
aux supply and measure inputs voltage: F1A (fast).

2. S2 terminals are internally interconnected.

PC-DMG110 connection via RS485 interface

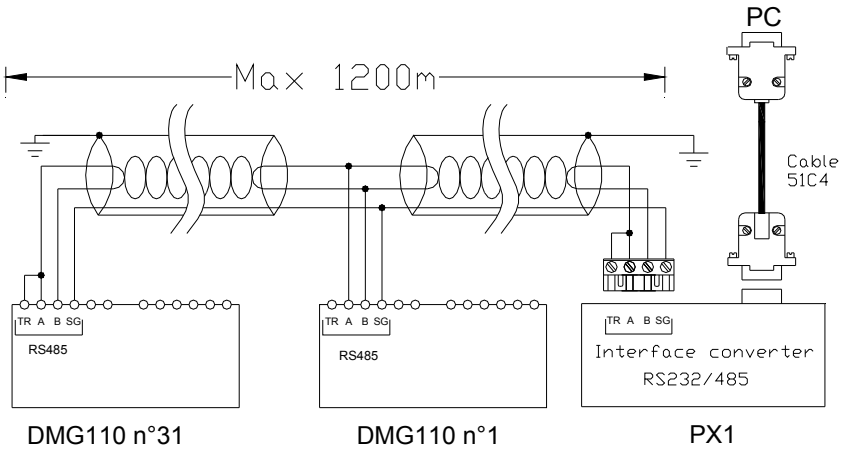

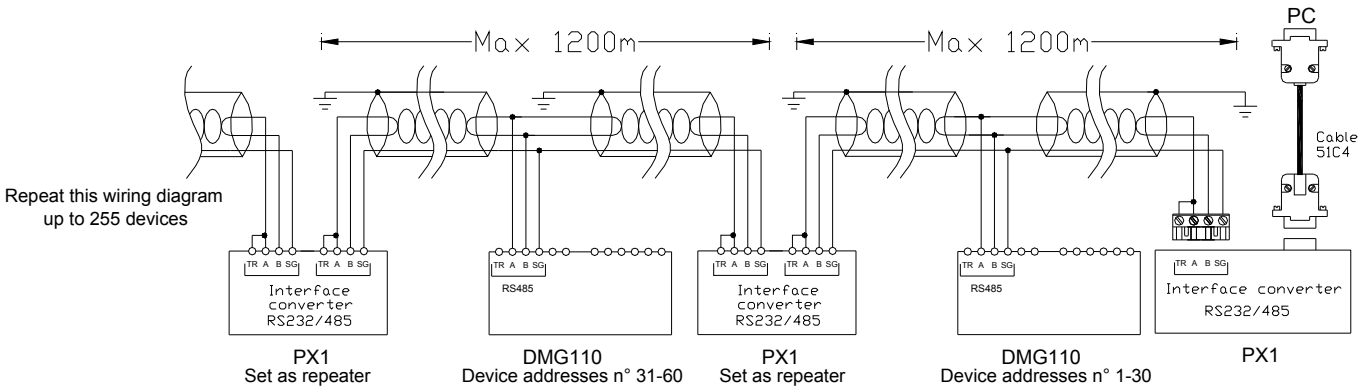

Remote control		
Order codes	**Description**	**Weight (kg)**
4PX1 **(1)**	RS232/RS-485 galvanically isolated converter drive 220…240 Vac supply.	0,600
51C4	PC- ↔ RS232/RS-485 converter drive connection cable, length 1.80 metres.	0,147

(1) RS232/RS-485 galvanically isolated bench converter drive, 38,400 Baud-rate max., automatic or manual TRANSMIT line supervision, 220…240 Vac ±10% supply (or 110…120 Vac on request).

Terminal layout

DMG100

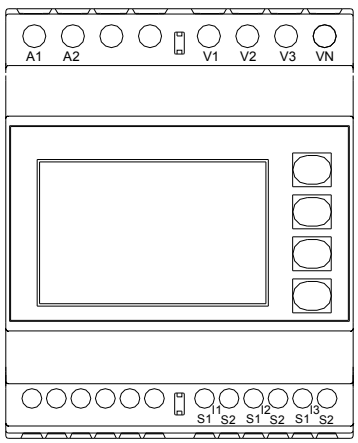

DMG110

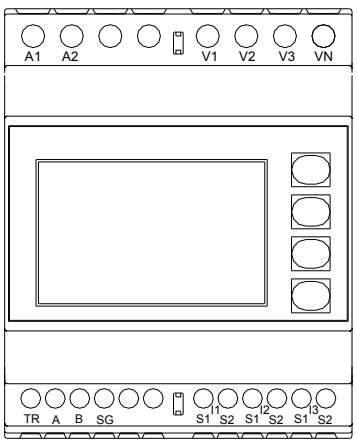

Mechanical dimensions and panel cut-out (mm)

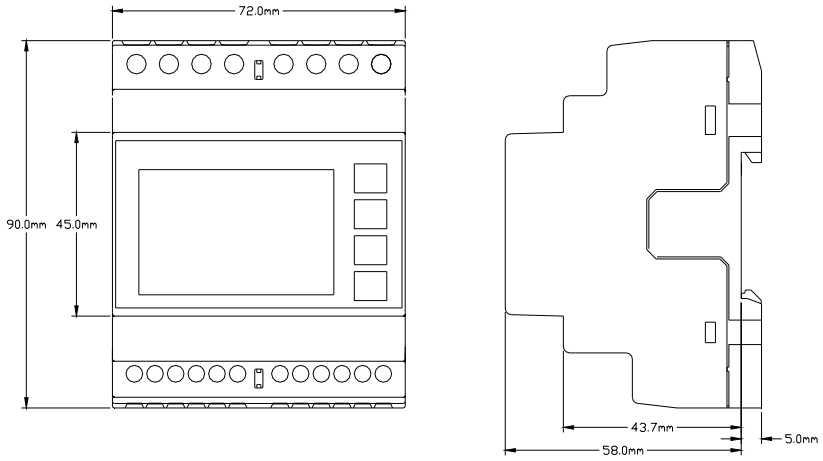

Technical specifications

Supply	
Rated voltage Us	100 - 240V~ 110 - 250V=
Operating voltage range	90 - 264V~ 93,5 - 300V=
Frequency	45 - 66Hz
Power consumption/dissipation DMG100 DMG110	 0.5W – 1.5VA 0.8W – 2.2VA
Immunity time for microbreakings DMG100 DMG110	 >= 40ms >= 30ms
Recommended fuses	F1A (fast)
Voltage input	
Max. rated voltage Ue	600 VAC L-L (346 VAC L-N)
Measuring range	50…720 V L-L (415 VAC L-N)
Frequency range	45…65 Hz
Measurement type	True root mean square (TRMS)
Measurement input impedance	L-N - L-L > 8MΩ
Connection method	Single-phase, two-phase, three-phase with or without neutral or balanced three-phase system
Recommended fuses	F1A (fast)
Current inputs	
Rated current Ie	1 A~ or 5 A~
Measuring range	For 5 A scale: 0.025 - 6 A~ For 1 A scale: 0.025 – 1.2 A~
Input type	Shunt supplied by an external current transformer (low voltage). 5 A max.
Measurement type	Root mean square (RMS)
Overload capacity	+20% Ie
Overload peak	50 A for 1 second
Burden (per phase)	≤0.6 VA
Measurement accuracy	
Measuring conditions Temperature	 +23 °C ±2 °C
Voltage (phase to neutral)	± 0.5% (50…480 V~) ±0.5 digit
Voltage (phase to phase)	± 0.5% (80…830 V~) ±0.5 digit
Current (CT /5)	± 0.5% (0.1…1.2In) ±0.5 digit
Active energy	Class 1 (IEC/EN 62053-21)
Reactive energy	Class 2 (IEC/EN 62053-23)
Additional errors	
Temperature	0.05%/°K per V, A, W
Insulation voltage	
Rated insulation voltage Ui	600 V~
Rated impulse withstand voltage Uimp	9.5 kV
Power frequency withstand voltage	5.2 kV
Ambient operating conditions	
Operating temperature	-20 - +60°C
Storage temperature	-30 - +80°C
Relative humidity	<80% (IEC/EN 60068-2-78)
Maximum ambient pollution	Degree 2
Overvoltage category	3
Measurement category	III
Climatic sequence	Z/ABDM (IEC/EN 60068-2-61)
Shock resistance	15g (IEC/EN 60068-2-27)
Vibration resistance	0.7g (IEC/EN 60068-2-6)
Auxiliary supply and voltage input connections	
Terminal type	Screw (fixed)
Number of terminals	4 for voltage inputs 2 for Aux supply
Cable cross section (min… max)	0.2 - 4.0 mm2 (24 - 12 AWG)
Tightening torque	0,8Nm (7lbin)

Current Input and RS485 (DMG110 only) connections	
Terminal type	Screw (fixed)
Number of terminals	6 for CT connection 4 for RS485 connection
Cable cross section (min… max)	0,2 - 2,5 mmq (24 - 12 AWG)
Tightening torque	0.44 Nm (4 lbin)
Housing	
Version	4 modules (DIN 43880)
Mounting	35mm DIN rail (EN60715) or by screw using extractible clips
Material	Polyamide RAL7035
Degree of protection	IP40 on front IP20 terminals
Weight	300g

Certifications and compliance	
cULus	Pending
Reference standards	IEC/EN 61010-1, IEC/EN 61000-6-2 IEC/ EN 61000-6-4 UL508 and CSA C22.2-N°14
UL Marking	Use 60°C/75°C copper (CU) conductor only AWG Range: 18 - 12 AWG stranded or solid Field Wiring Terminals Tightening Torque: 4.5lb.in Flat panel mounting on a Type 1 enclosure
❶ *Auxiliary supply from a system with a phase-neutral voltage ≤300 V*	

Manual revision history

Rev.	Date	Notes
00	26/01/2015	• First release
01	19/03/2015	• Change of range for P08.n.05 and P08.n.08