1200 series

Momentary pushbutton switches - round plunger

Distinctive features and specifications

UG1006-A



- ❑ **Butt action contacts, double break**
- ❑ **NF (EN 61058-1), UL and CSA approved**

B

ELECTRICAL SPECIFICATIONS

- Max. current/voltage rating with resistive load :
  - silver contacts (A) : 4A 250VAC - 8A 125VAC - 4A 24VDC - 8A 12VDC
  - silver plated copper contacts. (C) : 2A 250VAC - 3A 125VAC 2A 24VDC - 3A 12VDC
- Initial contact resistance : 10 mΩ
- Insulation resistance : 1.000 MΩ min. at 500VDC
- Dielectric strength :
  2.000 Vrms 50 Hz min. between terminals
  3.000 Vrms 50 Hz min. between terminals and frame
- Electrical life : 10.000 cycles at full load

MATERIALS

- Case : polyamide
- Plunger : polyamide
- Bushing : brass, nickel plated
- Contacts :
  A : silver
  C : copper, silver plated

GENERAL SPECIFICATIONS

- Torque : 1,50 Nm (1.10 Ft.lb) max. applied to nut
- Panel thickness :
  5 mm (.196) max.
- Total travel :
  NO : 4,5 (.177) +/- 0,3 (.011)
  NC : 3,5 (.137) +/- 0,3 (.011)
- Operating temperature :
  -20°C to +55°C

AGENCY APPROVALS

NF EN 61058-1 — 2A 250VAC or 4A 250VAC, T55/125°C
All models

4A 250VAC - 8A 125VAC
All models function 3 (NO)

Models 1233X209 and 1233X209L are standard marked NF.
To order switches marked NF, UL or CSA, complete appropriate box of ordering format.

ABOUT THIS SERIES

Dimensions : first dimensions are in mm while inches are shown as bracketted numbers.

Sealing boots are available to protect the switches against dust and water. They are presented in section H.

Mounting accessories : standard hardware supplied :
- silver contact models : 1 hex nut U166 and 1 knurled nut U411
- copper contact models : 1 hex nut U42 and 1 knurled nut U411

Standard and special hardware are presented in section I.

Packaging unit : 40 pieces, except model 1200.L (50 pieces).

MODEL STRUCTURE

1200 series

Momentary pushbutton switches - round plunger

Solder lug/quick-connect terminals - screw terminals

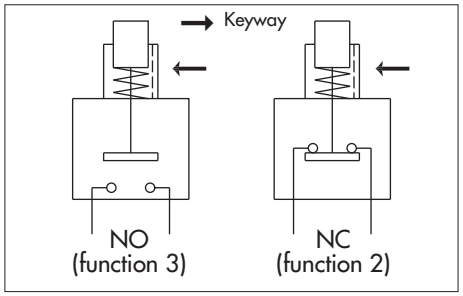

- Single pole configurations
- Approved models : see following pages
- Panel cut-out : Ø 12,2 (.480)

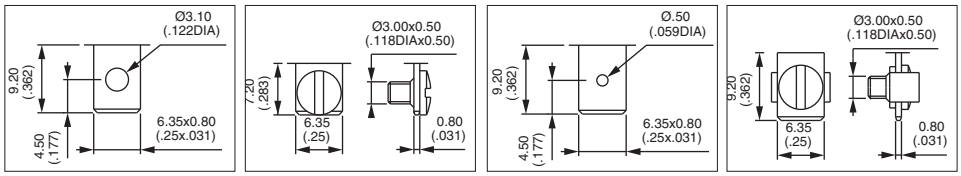

121. 122. 123. 120.

MODEL STRUCTURE



Plunger height : NO model : 7,50 mm, NC model : 5,80 mm

B

Solder lug/quick-connect terminals



1212		Normally Closed
1213		Normally Open

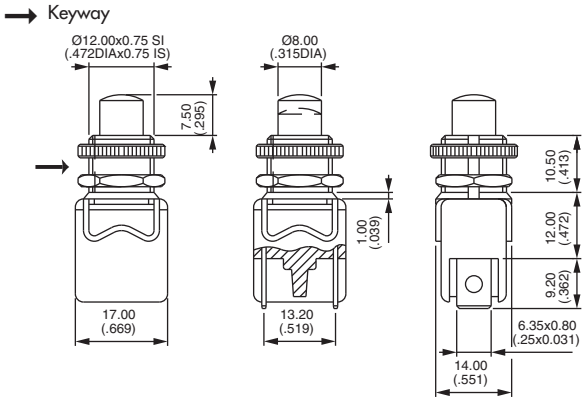

Screw terminals



1222		Normally Closed
1223		Normally Open

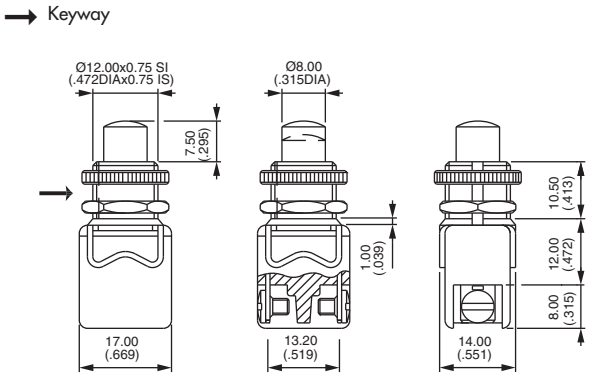

Normalized quick-connect terminals



1232		Normally Closed
1233		Normally Open

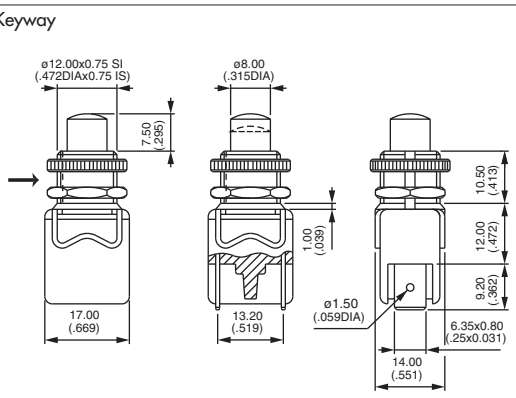

1200 series

Momentary pushbutton switches - round plunger

MODEL STRUCTURE

Plunger height : NO model : 7,50 mm, NC model : 5,80 mm

Straight screw terminals + clamp



1202		Normally Closed
1203		Normally Open

→ Keyway

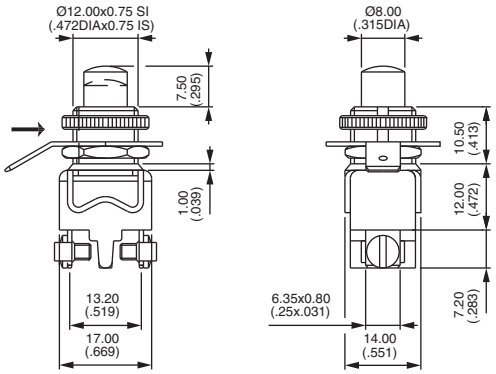

Right angle screw terminals + clamp



1203-7		Normally Open

→ Keyway

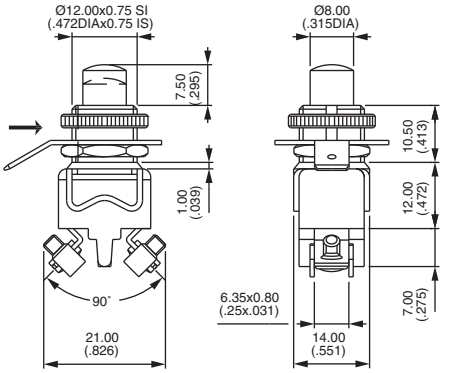

CONTACT MATERIALS

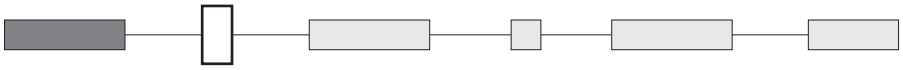

A Silver
C Copper, silver plated

FINISH

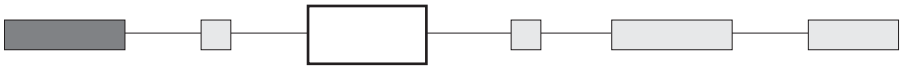

LUXE Chrome plated cap nut U117 instead of knurled nut U411

PLUNGER COLOURS

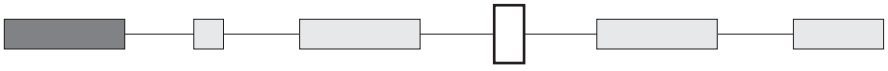

2 : Black - **3** : Green - **6** : Red - **7/1** : White

SPECIAL MODELS

X209 NF standard marked - Silver contacts



1233AX209 Normally open

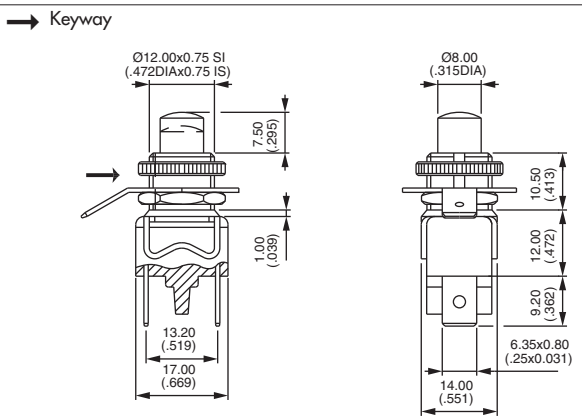

X209L NF standard marked - Silver contacts



1233AX209L Normally open

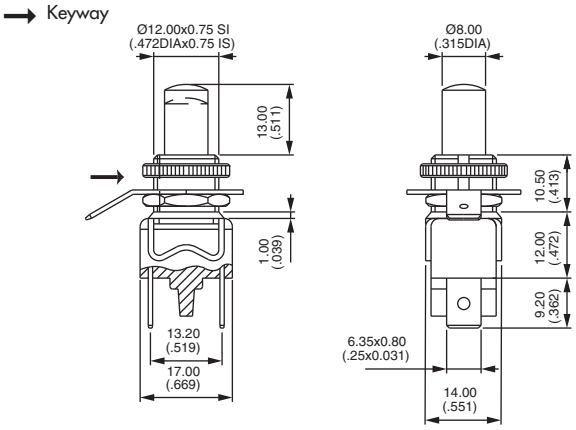

NOTE : Ground connector **U187** compulsory on models X209 and X209L if the panel is not metallic or not connected to ground. Order separately : see section I.

AGENCY APPROVALS

NF All models

UL-CSA All models function 3 (NO), including X209 and X209L

Marking : to order switches marked NF, UL or CSA, complete above box with desired approvals.

1200M/MR series

Robust momentary pushbutton switches - metal plunger

Distinctive features and specifications

UG1006-A



- ❑ **Butt action contacts, double break**
- ❑ **UL and CSA approved**

B

ELECTRICAL SPECIFICATIONS

- Max. current/voltage rating with resistive load :
  - silver contacts (A) : 4A 250VAC - 8A 125VAC - 4A 24VDC - 8A 12VDC
  - silver plated copper contacts (C) : 2A 250VAC - 3A 125VAC - 2A 14VDC - 3A 12VDC
- Initial contact resistance : 10 mΩ max.
- Insulation resistance : 1.000 MΩ min. at 500VDC
- Dielectric strength :
  2.000 Vrms 50 Hz min. between terminals
  3.000 Vrms 50 Hz min. between terminals and frame
- Electrical life : 10.000 cycles at full load

MATERIALS

- Case : polyamide
- Plunger : top chrome plated brass on polyamide base
- Bushing : brass, nickel plated
- Cap nut : brass, chrome plated
- Contacts : **A** : silver
  C : copper, silver plated

GENERAL SPECIFICATIONS

- Torque : 1,50 Nm (1.10 Ft.lb) max. applied to nut
- Panel thickness : 4,5 mm (.177) max.
- Total travel :
  NO : 4,5 mm (.177) +/- 0,3 (.011)
  NC : 3,5 mm (.137) +/- 0,3 (.011)
- Operating temperature : -20°C to +55°C

AGENCY APPROVALS

4A 250VAC - 8A 125VAC

Availability : approved models are 1213A and 1203A (M or MR) (model 1223A is only UL approved).

Marking : to order switches marked UL or CSA, complete appropriate box of ordering format.

ABOUT THIS SERIES

Dimensions : first dimensions are in mm while inches are shown as bracketted numbers.

Mounting accessories : standard hardware supplied with all models : 1 hex nut U166 and 1 conic cap nut U1866-6. Special cap nut U1874 is presented on the following pages.

Packaging unit : 40 pieces

MODEL STRUCTURE

1200M/MR series

Robust momentary pushbutton switches - metal plunger

Solder lug/quick-connect terminals - screw terminals

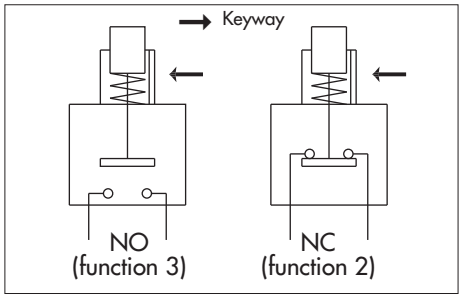

- Flat or curved plunger
- Panel cut-out Ø 12,2 (.480)
- Single pole

121.

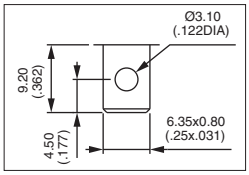

122.

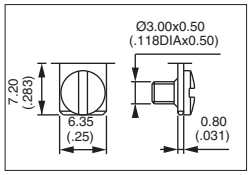

120.

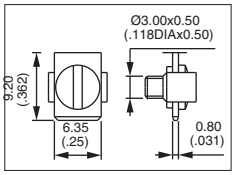

MODEL STRUCTURE

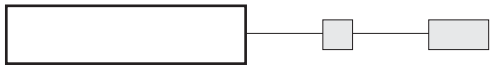

B

Solder lug/quick-connect terminals 6,35 x 0,8 (.250 x .031)



Curved plunger	Flat plunger		
1212MR	**1212M**		NC
1213MR	**1213M**		NO

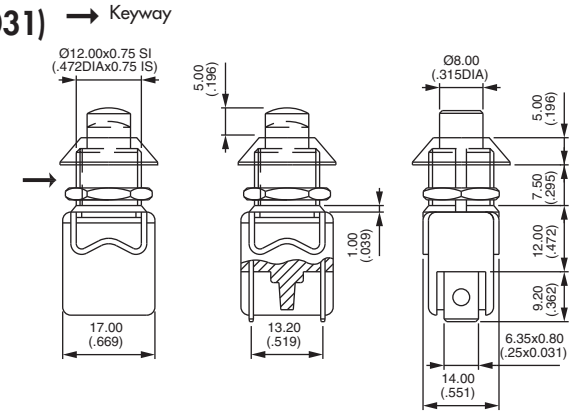

Screw terminals



Curved plunger	Flat plunger		
1222MR	**1222M**		NC
1223MR	**1223M**		NO

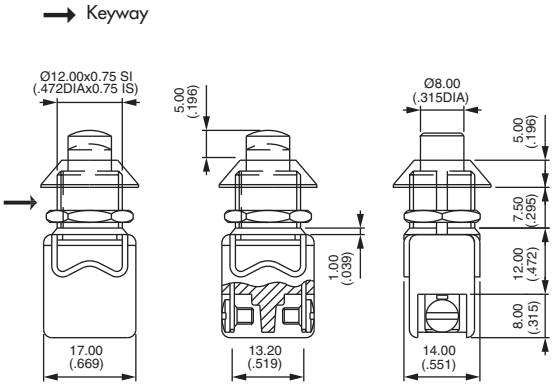

Screw terminals + clamp



Curved plunger	Flat plunger		
1202MR	**1202M**		NC
1203MR	**1203M**		NO

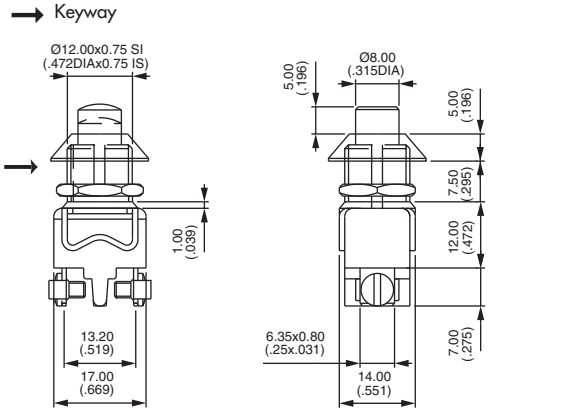

1200M/MR series

Robust momentary pushbutton switches - metal plunger

OPTIONS

CONTACT MATERIALS

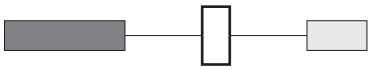

A Silver
C Copper, silver plated

AGENCY APPROVALS

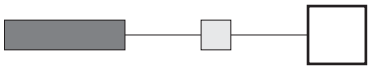

UL - CSA

Availability : approved models are 1213A and 1203A (M or MR) - model 1223A is only UL approved.

Marking : to order switches marked UL or CSA, complete above box with desired approvals.

SPECIAL CAP NUT

Chrome plated cap nut Ø 16 (.629), flat and plain.
Can be supplied instead of standard cap nut U1866-6.
Order separately.

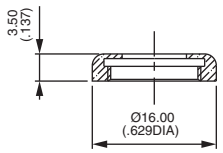

U1874