DATA SHEET

Thermal overload relay TF42



Thermal overload relays are economic electromechanical protection devices for the main circuit. They are used mainly to protect motors against overload and phase failures. Starter combinations are setup together with contactors.

Description

- Overload protection – trip class 10
- Phase loss sensitivity
- Temperature compensation from -25...+60 °C
- Adjustable current setting for overload protection
- Automatic or manual reset selectable
- Suitable for three- and single-phase application
- Trip-free mechanism
- Status indication
- STOP and TEST function
- Direct mounting onto block contactors
- Sealable operating elements

Approvals								Marks
A	K	E	D				P	a
cULus UL 508	CB scheme	CCC	GOST-R	ABS	RINA	DNV	Lloyd's Register	CE

Order data

TF42 screw terminal for AF contactors

Setting range A	Type	Order code	Weight Pkg (1 pce) kg
0.10...0.13	TF42-0.13	1SAZ721201R1005	0.130
0.13...0.17	TF42-0.17	1SAZ721201R1008	0.130
0.17...0.23	TF42-0.23	1SAZ721201R1009	0.130
0.23...0.31	TF42-0.31	1SAZ721201R1013	0.130
0.31...0.41	TF42-0.41	1SAZ721201R1014	0.130
0.41...0.55	TF42-0.55	1SAZ721201R1017	0.130
0.55...0.74	TF42-0.74	1SAZ721201R1021	0.130
0.74...1.00	TF42-1.0	1SAZ721201R1023	0.130
1.00...1.30	TF42-1.3	1SAZ721201R1025	0.130
1.30...1.70	TF42-1.7	1SAZ721201R1028	0.130
1.70...2.30	TF42-2.3	1SAZ721201R1031	0.130
2.30...3.10	TF42-3.1	1SAZ721201R1033	0.130
3.10...4.20	TF42-4.2	1SAZ721201R1035	0.130
4.20...5.70	TF42-5.7	1SAZ721201R1038	0.130
5.70...7.60	TF42-7.6	1SAZ721201R1040	0.130
7.60...10.0	TF42-10	1SAZ721201R1043	0.130
10.0...13.0	TF42-13	1SAZ721201R1045	0.130
13.0...16.0	TF42-16	1SAZ721201R1047	0.130
16.0...20.0	TF42-20	1SAZ721201R1049	0.145
20.0...24.0	TF42-24	1SAZ721201R1051	0.145
24.0...29.0	TF42-29	1SAZ721201R1052	0.145
29.0...35.0	TF42-35	1SAZ721201R1053	0.145
35.0...38.0/40.0	TF42-38	1SAZ721201R1055	0.145

Suitable for mounting on: AF09 ... AF38.

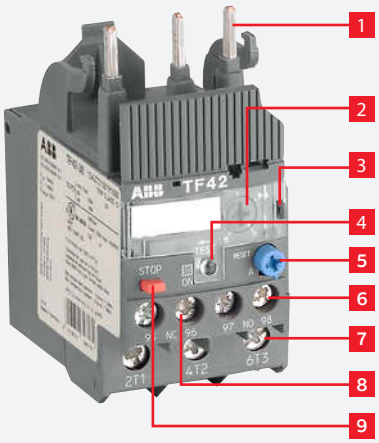

Functional description

1. Terminals 1L1, 3L2, 5L3
2. Current setting range
   Adjustable current setting for overload protection
3. Sealable operating elements
4. Status indication
5. RESET button
   Automatic or manual reset selectable
6. Signaling contacts 97-98
7. Terminals 2T1, 4T2, 6T3
8. Tripping contacts 95-96
9. STOP button

Application / internal function

The thermal overload relays are three pole relays with bimetal tripping elements (1 per pole). The motor current flows through the bimetal tripping elements and heats them directly and indirectly. In case of an overload (over current), the bimetal elements become bent as a result of the heating. This leads to a release of the relay and a change of the contacts switching position (95-96 / 97-98). The contact 95-96 is used to control the load contactor.

The overload relays have a setting scale in Amperes, which allows the direct adjusting of the relay without any additional calculation. In compliance with international and national standards, the setting current is the rated current of the motor and not the tripping current (no tripping at 1.05 x I, tripping at 1.2 x I; I = setting current). The relays are constructed in way that they protect themselves in the event of an overload. The overload relay has to be protected against short-circuit. The appropriate short-circuit protective devices are shown in the table.

Operation mode

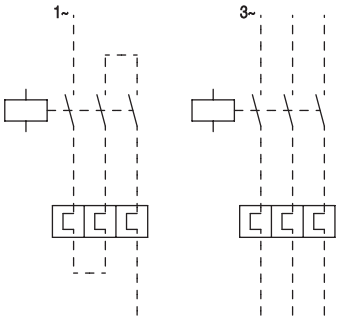

Wiring diagram

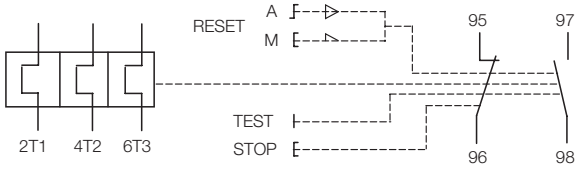

	Contact 95-96	Contact 97-98	Status indication	Comment
Trip state	open	closed		
RESET state	closed	open	ON	
TEST manual reset mode	open	closed		
TEST auto reset mode	open	closed		while TEST is operated
STOP while device is in trip state	open	closed		STOP button has no function
STOP while device is in RESET state	open	open		while STOP button is pressed

Resistance and power loss per pole and Short-circuit protective device

Type	Setting range		Resistance per pole	Power loss per pole		Short-circuit protection device coordination type 2
	lower value	upper value		at lower value	at upper value	
	A	A	mΩ	W	W	
TF42-0.13	0.10	0.13	106508.88	1.1	2.0	0.5 A, Type T
TF42-0.17	0.13	0.17	62283.74	1.1	2.0	1.0 A, Type T
TF42-0.23	0.17	0.23	37429.00	1.1	2.0	1.0 A, Type T
TF42-0.31	0.23	0.31	20603.43	1.1	2.0	1.0 A, Type T
TF42-0.41	0.31	0.41	11421.77	1.1	2.0	2.0 A, Type gG
TF42-0.55	0.41	0.55	6347.11	1.1	2.0	2.0 A, Type gG
TF42-0.74	0.55	0.74	3615.62	1.1	2.0	4.0 A, Type gG
TF42-1.0	0.74	1.00	1920.00	1.1	2.0	6.0 A, Type gG
TF42-1.3	1.00	1.30	1065.09	1.1	2.0	6.0 A, Type gG
TF42-1.7	1.30	1.70	622.84	1.1	2.0	10.0 A, Type gG
TF42-2.3	1.70	2.30	340.26	1.1	2.0	10.0 A, Type gG
TF42-3.1	2.30	3.10	187.30	1.1	2.0	10.0 A, Type gG
TF42-4.2	3.10	4.20	102.04	1.1	2.0	20.0 A, Type gG
TF42-5.7	4.20	5.70	59.10	1.1	2.0	20.0 A, Type gG
TF42-7.6	5.70	7.60	31.16	1.1	2.0	35.0 A, Type gG
TF42-10	7.60	10.00	19.30	1.1	2.0	35.0 A, Type gG
TF42-13	10.00	13.00	13.07	1.3	2.2	40.0 A, Type gG
TF42-16	13.00	16.00	7.79	1.3	2.2	40.0 A, Type gG
TF42-20	16.00	20.00	6.25	1.8	2.6	63.0 A, Type gG
TF42-24	20.00	24.00	4.51	1.8	2.6	63.0 A, Type gG
TF42-29	24.00	29.00	3.09	1.8	2.6	63.0 A, Type gG
TF42-35	29.00	35.00	2.25	2.1	2.8	80.0 A, Type gG
TF42-38	35.00	40.00	1.72	2.1	2.8	80.0 A, Type gG

Technical diagrams

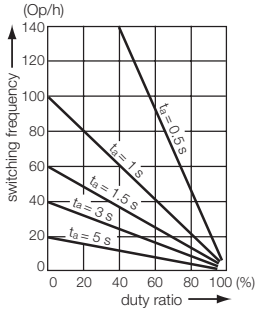

Intermittent periodic duty, ta: Motor starting time

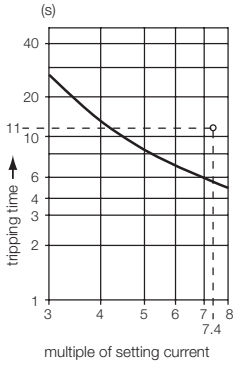

Example of a tripping curve, starting from cold state

Main dimensions

in mm, inches

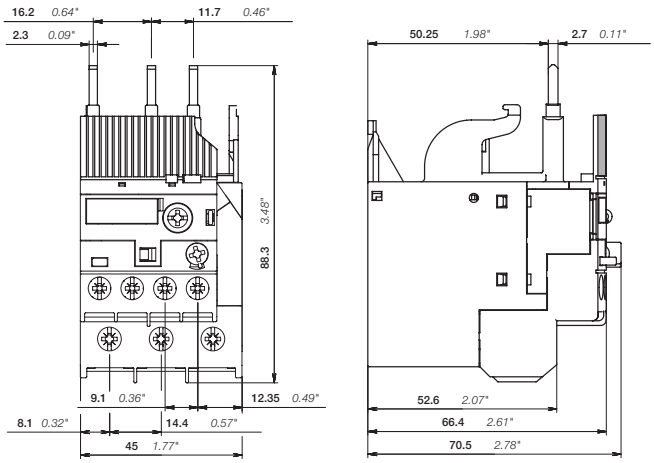

Technical data IEC/EN

Data at T_A = 40 °C and at rated values, if nothing else indicated

Main circuit

Terminal marking	**2T1-4T2-6T3**
Rated operational voltage Ue	690 V AC
	600 V DC
Setting range - thermal overload protection	see table on page 1
Rated operational current AC-3 Ie	see upper value of setting range, see table on page 3
Trip class	10
Rated frequency	50/60 Hz
Number of poles	3
Resistance per pole	see table on page 3
Power loss per pole	see table on page 3
Short-circuit protective devices	see table on page 3

Isolation data

Rated impulse withstand voltage Uimp	6 kV
Rated insulation voltage Ui	690 V
Pollution degree	3

Electrical connection

	TF42 ≤ 20 A	**TF42 > 20 A**
solid	1/2 x 0.75...4 mm²	1/2 x 1.5...2.5 mm² / 1/2 x 2.5...10 mm²
stranded	1/2 x 0.75...4 mm²	1/2 x 1.5...2.5 mm² / 1/2 x 2.5...10 mm²
flexible with ferrule	1/2 x 0.75...4 mm²	1/2 x 1.5...2.5 mm² / 1/2 x 2.5...10 mm²
flexible with ferrule insulated	1/2 x 0.75...4 mm²	1/2 x 1.5...6 mm²
flexible without ferrule	1/2 x 0.75...4 mm²	1/2 x 2.5...4 mm² / 1/2 x 4...6 mm²
Stripping length	12 mm	
Tightening torque	1.5…2.5 Nm	2.5…2.7 Nm
Recommended screw driver	M4 (Pozidriv 2)	

Auxiliary circuit

Terminal marking		**95-96, 97-98**
Rated operational voltage Ue		600 V
Conventional free air thermal current Ith	N.C., 95-96	6 A
	N.O., 97-98	4 A
Rated frequency		DC, 50/60 Hz
Number of poles		1 N.C. + 1 N.O.
Rated operational current Ie acc. to IEC/EN 60947-5-1 for utilization category		
at AC-15 at 110-120 V	N.C., 95-96	3.00 A
	N.O., 97-98	0.5 A
at AC-15 at 220-230-240 V	N.C., 95-96	3.00 A
	N.O., 97-98	0.5 A
at AC-15 at 440 V	N.C., 95-96	0.75 A
	N.O., 97-98	0.5 A
at AC-15 at 480-500 V	N.C., 95-96	0.75 A
	N.O., 97-98	0.5 A
at DC-13 at 24 V	N.C., 95-96	1.25 A
	N.O., 97-98	1.25 A
at DC-13 at 110-120-125 V	N.C., 95-96	0.55 A
	N.O., 97-98	0.55 A
at DC-13 at 250 V	N.C., 95-96	0.27 A
	N.O., 97-98	0.27 A
at DC-13 at 500 V	N.C., 95-96	0.15 A
	N.O., 97-98	0.15 A
Minimum switching capacity		17 V / 3 mA
Short-circuit protective device	N.C., 95-96	6 A, Type gG
	N.O., 97-98	4 A, Type gG

Isolation data

Rated impulse withstand voltage Uimp	6 kV
Rated insulation voltage Ui	690 V
Pollution degree	3

Electrical connection

solid	1/2 x 0.75...4 mm²
stranded	1/2 x 0.75...4 mm²
flexible with ferrule	1/2 x 0.75...2.5 mm²
flexible with ferrule insulated	1 x 0.75...2.5 mm² 2 x 0.75...1.5 mm²
flexible without ferrule	1/2 x 0.75...1 mm² 1/2 x 1...2.5 mm²
Stripping length	9 mm
Tightening torque	1...1.5 Nm
Recommended screw driver	M3 (Pozidriv 2)

General data

Duty time		100 %
Operating frequency without early tripping		up to 15 operations/h or 60 operations/h with 40 % duty ratio, if the motor breaking current 6 x In and the motor starting time does not exceed 1 s
Dimensions (W x H x D)		see drawing "Dimensions"
Weight		see table "Order data"
Mounting		mount on the contactor and tighten the screws of the main circuit terminals or with single mounting kit on DIN rail (35 mm)
Mounting position		position 1-5
Minimum distance to other units same type	horizontal	none
	vertical	not applicable
Minimum distance to electrical conductive board	horizontal	none
	vertical	on request
Degree of protection	houisng	IP20
Altitude	main circuit terminals	up to 2000 m

Electromagnetic compatibility

Electromagnetic compatibility	not applicable

Environmental data

Ambient air temperature		
Operation	open - compensated	-25...+60 °C (> 38 A: -25...+50 °C)
	open	-25...+60 °C (> 38 A: -25...+50 °C)
Storage		-50...+80 °C
Ambient air temperature compensation		acc. to IEC/EN 60947-4-1
Resistance to vibrations acc. to IEC 60068-2-6 (Fc)		5g / 3...150 Hz
Resistance to shock acc. to IEC 60068-2-27(Ea)		25g / 11 ms

Standards / directives

Standards	IEC/EN 60947–4–1 IEC/EN 60947-5-1 IEC/EN 60947-1 UL 508, CSA 22.2 No. 14
Low Voltage Directive	2006/95/EC
EMC Directive	2004/108/EC
RoHS Directive	2002/95/EC

Technical data UL/CSA

Main circuit

Type	Full load amps (FLA)	Short-circuit protective device 480 / 600 V AC		480 / 600 V AC	
		SCCR	Fuse type	SCCR	Fuse type
TF42-0.13	0.13 A	18 kA	1 A, K5	100 kA	30 A, Class J
TF42-0.17	0.17 A	18 kA	1 A, K5	100 kA	30 A, Class J
TF42-0.23	0.23 A	18 kA	1 A, K5	100 kA	30 A, Class J
TF42-0.31	0.31 A	18 kA	3 A, K5	100 kA	30 A, Class J
TF42-0.41	0.41 A	18 kA	3 A, K5	100 kA	30 A, Class J
TF42-0.55	0.55 A	18 kA	3 A, K5	100 kA	30 A, Class J
TF42-0.74	0.74 A	18 kA	3 A, K5	100 kA	30 A, Class J
TF42-1.0	1.00 A	18 kA	6 A, K5	100 kA	30 A, Class J
TF42-1.3	1.30 A	18 kA	6 A, K5	100 kA	30 A, Class J
TF42-1.7	1.70 A	18 kA	6 A, K5	100 kA	30 A, Class J
TF42-2.3	2.30 A	18 kA	10 A, K5	100 kA	30 A, Class J
TF42-3.1	3.10 A	18 kA	10 A, K5	100 kA	30 A, Class J
TF42-4.2	4.20 A	18 kA	15 A, K5	100 kA	30 A, Class J
TF42-5.7	5.70 A	18 kA	20 A, K5	100 kA	30 A, Class J
TF42-7.6	7.60 A	18 kA	25 A, K5	100 kA	30 A, Class J
TF42-10	10.0 A	18 kA	35 A, K5	100 kA	45 A, Class J
TF42-13	13.0 A	18 kA	40 A, K5	100 kA	45 A, Class J
TF42-16	16.0 A	18 kA	60 A, K5	100 kA	45 A, Class J
TF42-20	20.0 A	18 kA	80 A, K5	100 kA	60 A, Class J
TF42-24	24.0 A	18 kA	80 A, K5	100 kA	60 A, Class J
TF42-29	29.0 A	18 kA	100 A, K5	100 kA	100 A, Class J
TF42-35	35.0 A	18 kA	150 A, K5	100 kA	175 A, Class J
TF42-38	38.0 A	18 kA	150 A, K5	100 kA	175 A, Class J

Main circuit

Max. operational voltage	600 V AC
Trip rating	125% of FLA
Full load amps (FLA)	see table above
Short-circuit rating RMS symmetrical	see table above
Short-circuit protective device	see table above

Electrical connection

	TF42 ≤ 20 A	TF42 > 20 A
Connecting capacity		
stranded	1/2 x AWG 18...10	1/2 x AWG 14...6
flexible without ferrule	1/2 x AWG 18...10	1/2 x AWG 14...6
Stripping length	12 mm	
Tightening torque	13...22 lb-in	22 lb-in

Auxiliary circuit

Conventional thermal current	N.C., 95-96	5 A
	N.O., 97-98	2.5 A
Making and breaking capacity	N.C., 95-96	B600, Q300
	N.O., 97-98	D300, Q300

Electrical connection

Connecting capacity	
stranded	1/2 x AWG 18...12
flexible without ferrule	1/2 x AWG 18...12
Stripping length	9 mm
Tightening torque	9...13 lb-in

ABB STOTZ-KONTAKT GmbH
Electrification Business
Low Voltage Products and Systems
Eppelheimer Straße 82
D-69123 Heidelberg / Germany
Phone: +49 (0) 6221 7 01-0
Fax: +49 (0) 6221 7 01-13 25
E-Mail: info.desto@de.abb.com

You can find the address of your local sales organization on the ABB home page
https://new.abb.com/low-voltage/products/motor-protection/manual-motor-starter

We reserve the right to make technical changes or modify the contents of this document without prior notice. With regards to purchase orders, the agreed particulars shall prevail. ABB AG does not accept any responsibility whatsoever for potential errors or possible lack of information in this document.

We reserve all rights in this document and in the subject matter and illustrations contained therein. Any reproduction, disclosure to third parties or utilization of its contents – in whole or in parts – is forbidden without prior written consent of ABB AG.

Copyright© 2021 ABB - All rights reserved

2CDC106023D0202 - (03.2021 PDF)