Brand of NTN corporation

Technical data

UKP215H

Bearing units



Grey cast housing, radial insert ball bearing with adapter sleeve,seal with slinger

KIT CONTENT

UK215G2H, P215

VISUAL (S)

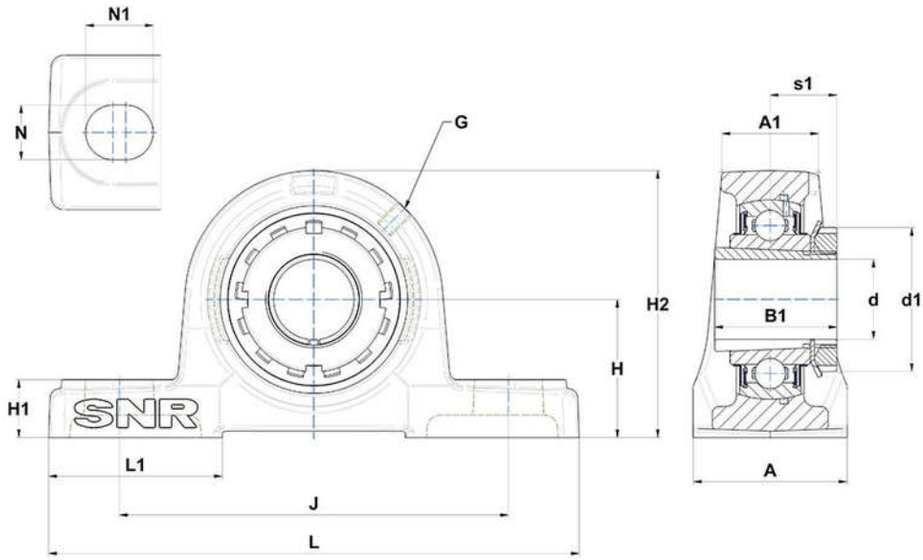

PRODUCT DEFINITION

Brand	SNR
A - Housing width	74 mm
A1 - Housing top width	48 mm
B - Width of Inner Ring	41 mm
d - Shaft diameter	65 mm
d1 - Outer dia of eccent. Lock. collar / nut of adapter sleeve	98 mm

PRODUCT DEFINITION	
G - Grease fitting	M10x1
H - Distance mounting base to centerline spheric. seating diam.	82,6 mm
H1 - Housing foot height	28 mm
H2 - Housing height	163 mm
J - Mounting holes distance	217 mm
L - Housing length	275 mm
L1 - Housing foot length	85 mm
N - Mounting hole dimension	25 mm
N1 - Mounting hole length	31 mm
s1 - Distance nut to middle of bearing raceway	35,5 mm

PRODUCT PERFORMANCE	
C - Dynamic load rating	66000000 mN
C0 - Static load rating	49500000 mN
Operating temperature min.	253,15 °K
Operating temperature max.	373,15 °K

OTHER FEATURES	
Mass	7,7 kg
Adapter sleeve designation	H2315