268 HANDHELD CASES

292 UNIVERSAL PLASTIC ENCLOSURES

317 HEAVY DUTY AND ELECTRICAL ENCLOSURES

341 DEVELOPMENT BOARD ENCLOSURES

369 VERSATILE IOT AND SENSOR ENCLOSURES

Hex-Box Pi Ready Enclosure

Product overview

This UK manufactured Hex-Box Pi Ready Enclosure has been designed with customisation and user flexibility at heart. The 100% recyclable housing features seven self-retaining panels, two of which have been customised to accommodate Raspberry Pi boards. The power cable panel and the remaining panels can be placed in your desired position. The design features and modern aesthetic create the perfect enclosure for Pi projects (when paired with the wall mount bracket) or desktops (when paired with the rubber feet), each sold separately. Raspberry Pi board not included.



Key features

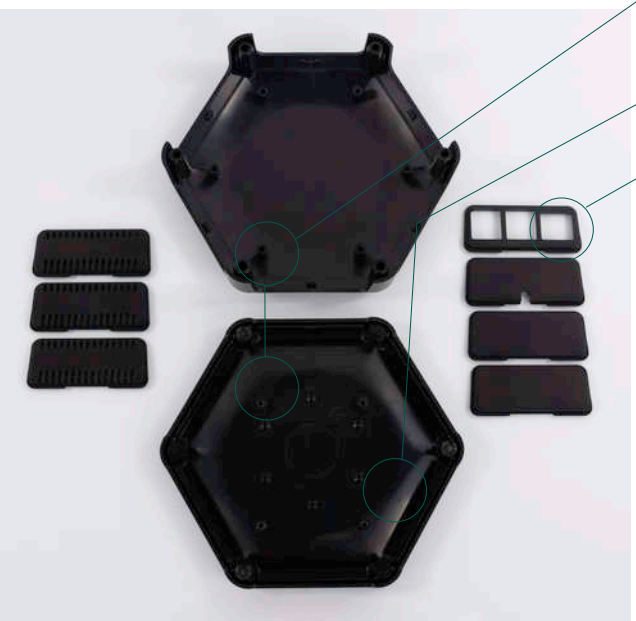

PCB mounting in the top and base
Six bosses in the top, four in the base with Raspberry Pi mountable footprint

Number index in base
Aids wall mounting

Self-retaining removable end panels
Two pre-customised panels to allow for Raspberry Pi connections to be made. One spare panel to replace the power cable panel if using PoE.

Smooth bevelled lid with flat top
Suitable for a 2.5" screen and perfect for digital printing



RANGE SPECIFICATION				
STANDARD UNIT INCLUDES	Base, top, 7 x panels, 3 x 16mm thread forming (Pozi CSK) screws, 4 x No.4 x 1/4" Pozi Pan			
MATERIALS	Base	UL94-V0 ABS		
	Top	UL94-V0 ABS		
	Screws	BZP (Bright Zinc Plated Steel)		
COLOURS	Grey	RAL7047		
	Black	RAL9005		
	White	RAL9003		
COMPLIANCE	RoHS compliant			
OPERATING TEMPERATURE	-10°C to +80°C			
TEST RESULTS	**Standard**	**Test**	**Result**	**Test report**
	EN 62262	Impact test	IK07	TR112
	BS EN 60529	IP code	IP30	TR110
SCREW TORQUE	Pozi csk screws	0.3Nm		
PURCHASING INFORMATION	Country of origin	Great Britain (GB)		
	Commodity code	3923101000		
	Weight	120g		
	Enclosure type	Versatile sensor and IoT enclosures		
OPTIONS	For alternative colours and materials MOQs will apply			

DESCRIPTION	GREY (GY)	BLACK (BK)	WHITE (WH)
1 x enclosure, 2 x customised solid panels to accommodate Raspberry Pi4, 2 x solid panel and 3 x vented panels	CBHEX1-PI4-GY	CBHEX1-PI4-BK	CBHEX1-PI4-WH

ENCLOSURE DIMENSIONS (LxWxH)		
EXTERNAL	INTERNAL	WALL THICKNESS
146 x 130 x 45 mm	122.5 x 125.5 x 34.5 mm	2.5 mm

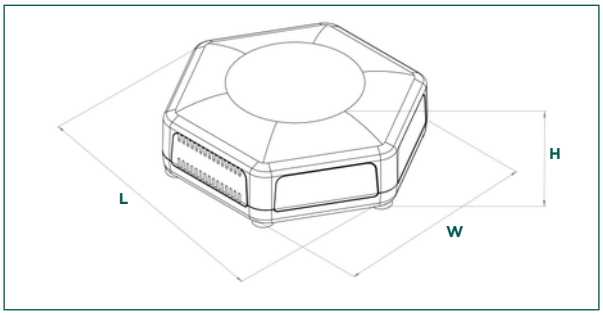

Potential industries / applications

Smart home, smart office, portable computer, networking projects, Pi camera, Pi screen, IoT

+44 (0)1638 716101 | sales@camdenboss.com | www.camdenboss.com

We operate a constant improvement policy, our products are subject to change without notice.

Vers 2

bsi ISO 9001 Quality Management Systems CERTIFIED
FM 28614

268 HANDHELD CASES
292 UNIVERSAL PLASTIC ENCLOSURES
317 HEAVY DUTY AND ELECTRICAL ENCLOSURES
341 DEVELOPMENT BOARD ENCLOSURES
369 VERSATILE IOT AND SENSOR ENCLOSURES

Desk Mount Accessory

Product overview

The six rubber feet (CBHEX-FEET) turn your Hex-Box IoT Enclosure into a tabletop enclosure. Simply push the feet into the holes in the base of the Hex-Box IoT Enclosure.

RUBBER FEET (6PCS)	
CBHEX-FEET	

Rubber feet



Wall Mount Accessory

Product overview

Transform your Hex-Box IoT Pi Enclosure into a wall mountable enclosure with the Circular Wall Mount Bracket. This revolutionary circular mounting bracket is packed full of mounting options and offers seamless and discrete mounting to retain the modern aesthetic look of your housing, whilst gaining additional functionality.

Circular Wall Mount Bracket



Key features

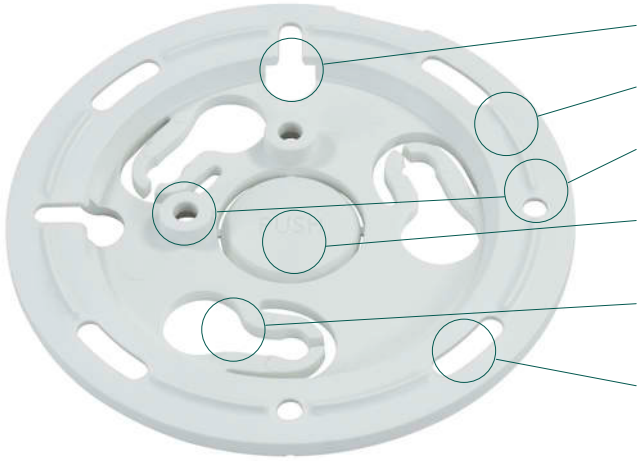

2 x keyhole mounting slots
Allow for quick and easy wall mounting

Raised rib standoffs
Help with stability of the enclosure on uneven walls

2 x sets of UK single gang back box mounting points
In two off centre orientations

25mm cable entry knockout for cable management
Customisation required to the enclosure base, using the guide provided

Easy installation
Screw the lugs to the enclosure, twist 30 degrees and your bracket is attached

4 x static mount points/slots
Provides easy and flexible wall mount fitting

RANGE SPECIFICATION		
MATERIAL	Wall mount bracket	UL94-V0 ABS
	Wall mount lugs	UL94-V0 ABS
	Screws	BZP (Bright Zinc Plated Steel)
DIAMETER	98.3 mm	
PURCHASING INFORMATION	Country of origin	Great Britain (GB)
	Commodity code	3923101000
	Weight	23.6g

CIRCULAR WALL MOUNT BRACKET			
GREY (GY)	BLACK (BK)	WHITE (WH)	INCLUDED
CBWMC-GY	CBWMC-BK	CBWMC-WH	1 x circular wall mount bracket, 3 x screws, 3 x lugs

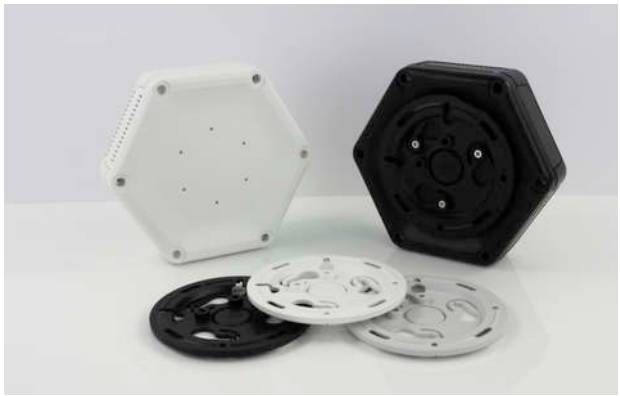

bsi ISO 9001 Quality Management Systems CERTIFIED
FM 28614

+44 (0)1638 716101 | sales@camdenboss.com | www.camdenboss.com

We operate a constant improvement policy, our products are subject to change without notice.
Vers 2