TI01570F/00/EN/03.21
71526952
2021-05-31

Technical Information
Soliphant M FTM50

Vibronic



Universal point level switch for fine-grained bulk solids

Application

The Soliphant M is a robust point level switch for silos with fine-grained or dusty bulk solids, even with a low bulk weight. The various designs mean the device has a wide range of applications. A variety of certificates are available for use in potentially explosive atmospheres due to dust or gas.

Compact design for installation in any position. A wide range of applications thanks to various device versions, e.g.:
- Polished short fork with stainless steel housing (F15) and Tri-Clamp
- Coated standard fork with aluminum housing (F17) and flange
- Standard fork with 280 °C (536 °F) rating and aluminum housing (F13)

Your benefits

- Market leader in the area of level detection of bulk solids
- Functional safety up to SIL2 as per IEC 61508
- No mechanically moving parts
- Insensitive to external vibrations and buildup
- Various electronic inserts
- Configurable density setting (bulk weight setting) and switching delay
- Process temperature up to 280 °C (536 °F)
- Choice of coated or polished sensor
- Warning in the event of impending device failure due to buildup or abrasion

Endress+Hauser
People for Process Automation

Table of contents

About this document 3
Symbols 3

Function and system design 3
Measuring principle 3
Measuring system 4

Input 6
Measured variable 6
Measuring range 6
Input signal 6
Measuring frequency spectrum 6

Output 7
Output signal 7
Signal on alarm 10
Load 10
Galvanic isolation 10

Power supply 11
Supply voltage 11
Power consumption 11
Current consumption 11
Electrical connection 11
Switching on the power supply 16
Cable entries 16
Cable specification 16
Ripple 16
Overvoltage protection 17

Installation 17
Installation instructions 17

Environment 17
Ambient temperature range 17
Storage temperature 17
Operating height 17
Pollution degree 17
Climate class 17
Vibration resistance 17
Degree of protection 18
Shock resistance 18
Electrical safety 18
Electromagnetic compatibility (EMC) 18

Process 18
Medium temperature range 18
Medium pressure range 19
Thermal shock 19
Static pressure 19
Grain size 19
Bulk density 19
Lateral load (static) 19
Burst pressure 20

Mechanical construction 20
Design, dimensions 20
Dimensions 24
Weight 27
Materials 27
Surface refinement 28

Human interface 29
Display elements 29
FEM51, FEM52, FEM54, FEM55, FEM58 31
FEM57 32
Sediment detection 32

Certificates and approvals 33
CE mark 33
RCM-Tick marking 33
Ex approval 33
Functional safety 33
CRN approval 33
ASME B 31.3 33
Process seal as per ANSI/ISA 12.27.01 33
Pressure Equipment Directive 2014/ 68/EU (PED) 33
RoHS 34
EAC conformity 34
Additional certification 34
Other standards and guidelines 34

Ordering information 34

Accessories 34
Device-specific accessories 34

Supplementary documentation 36
Operating Instructions (BA) 36
Supplementary device-dependent documentation 36
Safety Instructions (XA) 36

About this document

Symbols

Safety symbols

DANGER

This symbol alerts you to a dangerous situation. Failure to avoid this situation will result in serious or fatal injury.

WARNING

This symbol alerts you to a dangerous situation. Failure to avoid this situation can result in serious or fatal injury.

CAUTION

This symbol alerts you to a dangerous situation. Failure to avoid this situation can result in minor or medium injury.

NOTICE

This symbol contains information on procedures and other facts which do not result in personal injury.

Electrical symbols

Direct current

Ground connection
Grounded clamp, which is grounded via a grounding system.

Protective earth (PE)
Ground terminals, which must be grounded prior to establishing any other connections. The ground terminals are located on the inside and outside of the device.

Communication symbols

Light emitting diode is off

Light emitting diode is on

Light emitting diode is flashing

Symbols for certain types of information

Permitted
Procedures, processes or actions that are permitted.

Forbidden
Procedures, processes or actions that are forbidden.

Tip
Indicates additional information

Symbols in graphics

A, B, C ... View

1, 2, 3 ... Item numbers

Hazardous area

Safe area (non-hazardous area)

Function and system design

Measuring principle

A piezoelectric drive excites the tuning fork of the Soliphant M to its resonance frequency. If a medium covers the tuning fork, the fork's vibrating amplitude changes (the vibration is attenuated). The electronics unit of the Soliphant M compares the actual amplitude with a target value and indicates whether the tuning fork is vibrating freely or is covered by medium.

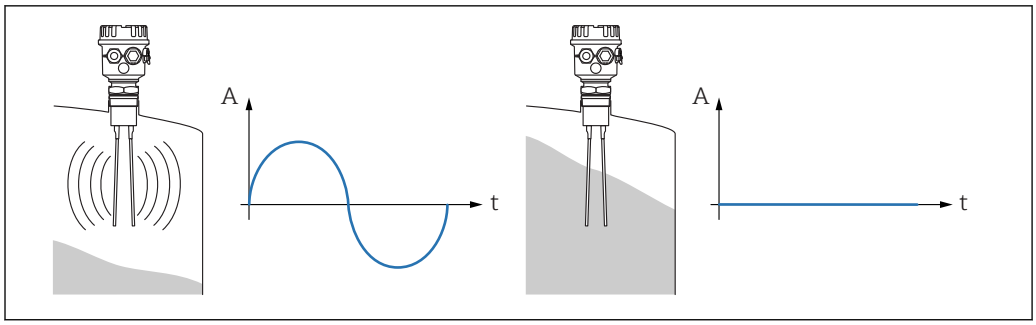

A0044386

A Amplitude
t Time

Version with separate housing

For high ambient temperatures and applications with confined installation conditions (e.g. filling nozzle applications). The cable between the separate housing and the sensor can be shortened by the customer onsite.

The wall mounting frame is part of the scope of supply for device versions with a separate housing.

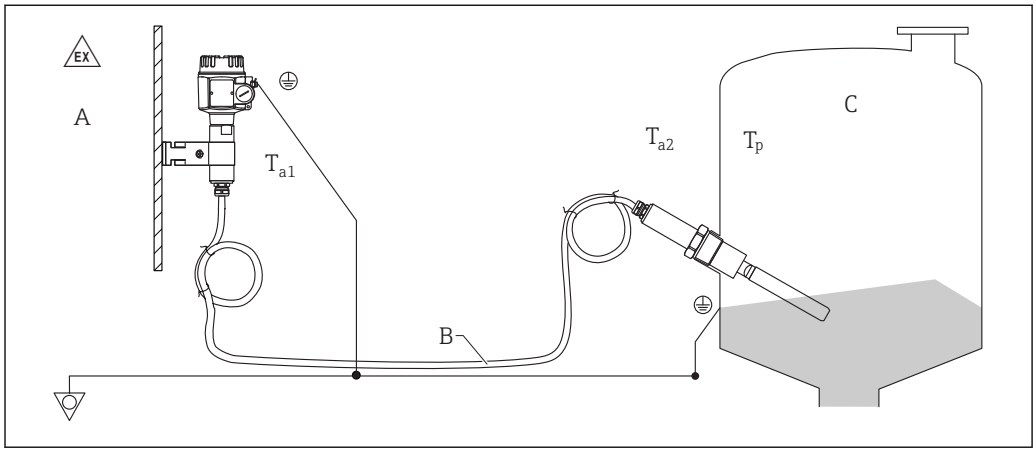

A0044500

A Zone 1, Zone 21;
B Max length 6 m (20 ft)
C Zone 0, Zone 20

- T_{a1}: 70 °C (158 °F)
- T_{a2}: 120 °C (248 °F)
- T_p:
  - 150 °C (302 °F)
  - 230 °C (446 °F)
  - 280 °C (536 °F)

Measuring system

The measuring system is available either with compact instrumentation or separate instrumentation with a switching unit. The following electronic versions are available:

Compact instrumentation

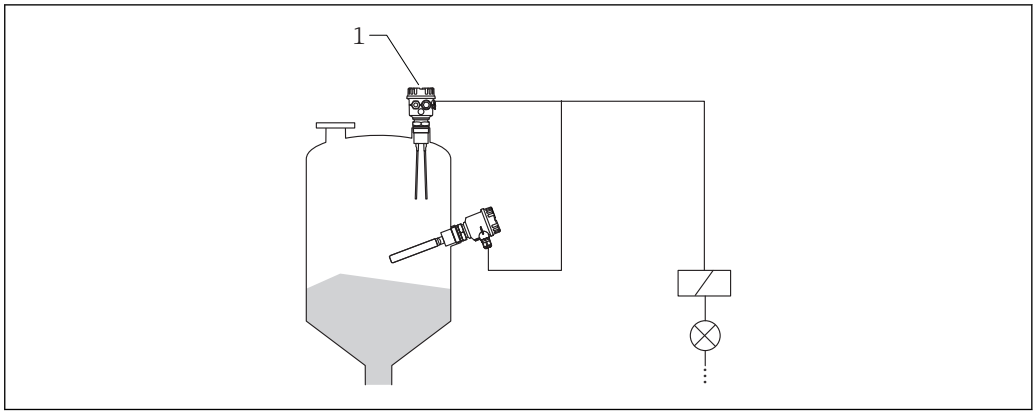

1 Electronic version

FEM51
- Two-wire AC version
- Switch the load directly in the power supply circuit via the thyristor

FEM52
- Three-wire DC version
- Switch the load via the transistor (PNP) and separate connection

FEM54
- Universal current version with relay output
- Switch the loads via 2 potential-free changeover contacts (DPDT)

Separate instrumentation with switching unit

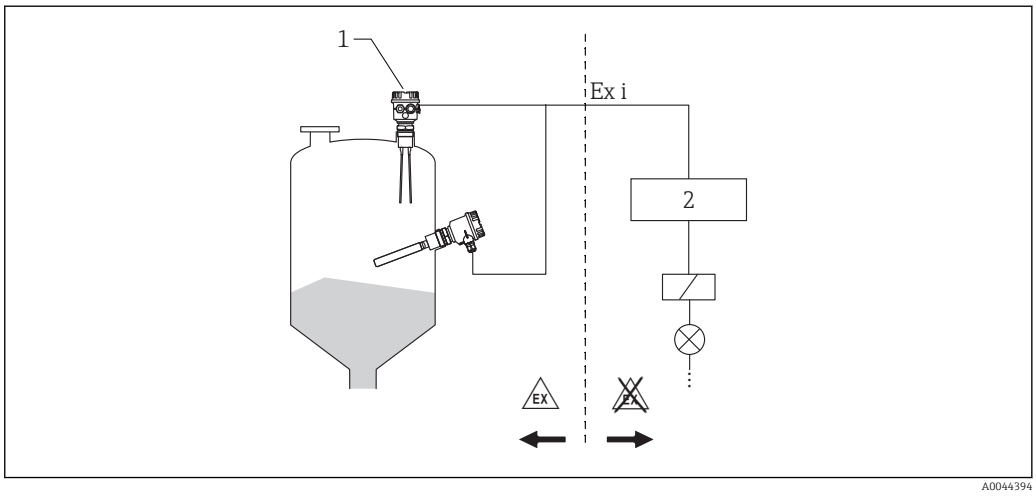

1 Electronic version
2 Switching unit, PLC, isolating amplifier, segment coupler

For connection to a separate switching unit or isolating amplifier such as Nivotester:
- FTL325N, FTL375N (NAMUR) or
- FTL325P, FTL375P (PFM)

FEM55
Signal transmission 8/16 mA along two-wire cabling

FEM57
- PFM signal transmission
- Current pulses superimposed on the power supply along the two-wire cabling
- Self-test from the switching unit without changing levels

FEM58
- Signal transmission H-L edge 2.2 to 4.8/0.4 to 1.0 mA as per EN 50227 (NAMUR) along two-wire cabling
- Connecting cables and follow-on devices tested by pressing a key on the electronic insert

Input

Measured variable

Level (in line with the orientation and length)

Measuring range

Length, see → 📄 24

The measuring range of Soliphant M depends on the medium, mounting location and fork length. The detection range is located within the length of the tuning fork.

Distinction between the forks for light media:
- Standard fork with a fork length of 155 mm (6.1 in)
- Bulk weight of the medium ≥ 10 g/l (0.62 lb/ft³)

Distinction between the forks for confined installation conditions, high lateral load or increased buildup:
- Short fork with a fork length of 100 mm (3.94 in)
- Bulk weight of the medium ≥ 50 g/l (3.12 lb/ft³)

Input signal

- Probes covered → little to no vibrating amplitude
- Probes free → large vibrating amplitude

Selectable frequency monitoring (diagnostics) for detection of abrasion and buildup formation.

Measuring frequency spectrum

- Standard fork: approx. 140 Hz (in air)
- Short fork: approx. 350 Hz (in air)

Output

Output signal

FEM51

Safety mode	Level	Output signal	Light emitting diodes		
			GN	YE	RD
MAX		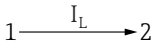			
		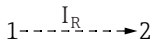			
MIN		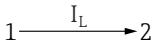			
		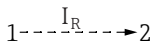			
Maintenance required		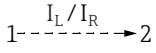			
Device failure		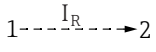			

- I_L: Load current (switched through)
- I_R: Residual current (blocked)

FEM52

Safety mode	Level	Output signal	Light emitting diodes		
			GN	YE	RD
MAX		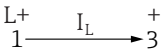			
		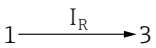			
MIN					
Maintenance required					
Device failure					

- I_L: Load current (switched through)
- I_R: Residual current (blocked)

FEM54

Safety mode	Level	Output signal	Light emitting diodes		
			GN	YE	RD
MAX		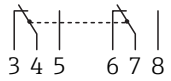	☀	☀	●
		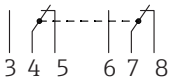	☀	●	●
MIN		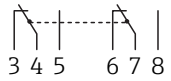	☀	☀	●
		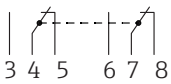	☀	●	●
Maintenance required			☀	●	◐
Device failure		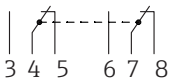	☀	●	☀

- ⎍ |: relay energized
- | ⎍: relay de-energized

FEM55

Safety mode	Level	Output signal	Light emitting diodes		
			GN	YE	RD
MAX		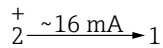	☀	☀	●
		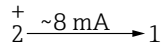	☀	●	●
MIN		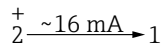	☀	☀	●
			☀	●	●
Maintenance required		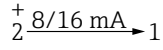	☀	●	◐
			☀	●	◐
Device failure		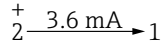	●	●	☀

- ~16 mA: 16 mA ±5 %
- ~8 mA: 8 mA ±6 %

FEM57

Safety mode	Level	Output signal	Light emitting diodes		
			GN	YE	RD
		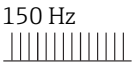 150 Hz			
		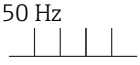 50 Hz			
Maintenance required		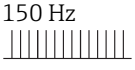 150 Hz			
	 A0044535	 0 Hz			
Device failure		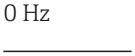 0 Hz			

FEM58

Safety mode	Level	Output signal	Light emitting diodes		
			GN	YE	RD
MAX		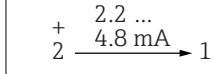 + 2 2.2 … 4.8 mA 1			
		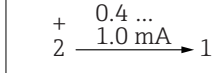 + 2 0.4 … 1.0 mA 1			
MIN		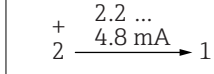 + 2 2.2 … 4.8 mA 1			
		+ 2 0.4 … 1.0 mA 1			
Maintenance required		+ 2 0.4 … 4.8 mA 1			
Device failure		+ 2 0.4 … 1.0 mA 1			

Safety mode

Minimum/maximum quiescent current safety selectable on electronic insert (in case of FEM57, only at Nivotester).

MAX = maximum safety:
The output switches in a safety-oriented manner when the tuning fork is covered (signal on alarm), e.g. used for overfill prevention.

MIN = minimum safety:
The output switches in a safety-oriented manner when the tuning fork is uncovered (signal on alarm), e.g. used for dry-running protection.

Switching delay

When the sensor is covered 0.5 s.

Version 150 °C (302 °F): 1.5 s when the sensor is uncovered (1.0 s for short fork)

Version 230 °C (446 °F)/ 280 °C (536 °F): when the sensor is uncovered 2 s (1.0 s for short fork) Can be switched to 5 s for covering and uncovering

Switching behavior

Binary

Signal on alarm

- FEM51: output signal in event of power and device failure: I_R
- FEM52: output signal in event of power and device failure: < 100 µA
- FEM54: output signal in event of power and device failure: relay de-energized
- FEM55: output signal in event of power and device failure: < 3.6 mA
- FEM57: output signal in event of power and device failure: < 0 Hz
- FEM58: output signal in event of power and device failure: < 1.0 mA

Load

FEM51
- For relays with a minimum holding power/rated power > 2.5 VA at 253 V (10 mA) or > 0.5 VA at 24 V (20 mA)
- For relays with a maximum holding power/rated power > 89 VA at 253 V or > 8.4 VA at 24 V
- Voltage drop over FEM51 max. 12 V
- Residual current with blocked thyristor max. 4 mA(5.5 mA for short fork)
- Load current max. 350 mA (short-circuit proof)

FEM52
- Load switched via transistor and separate PNP connection, max. 55 V
- Load current max. 350 mA(pulsed overload and short-circuit protection)
- Residual current with blocked thyristor < 100 µA (5.5 mA for short fork)
- Capacitance load max. 0.5 µF at 55 V, max. 1.0 µF at 24 V
- Residual voltage with transistor switched through < 3 V (

FEM54
- Loads switched via 2 floating change-over contacts (DPDT)
- AC: I~ max. 6 A (Ex de 4 A), U~ max. 253 V; P~ max. 1500 VA, cos φ = 1, P~ max. 750 VA, cos φ = > 0.7
- DC: I~ max. 6 A (Ex de 4 A) to 30 V, I⎓ max. 0.2 A to 125 V
- The following applies when connecting a functional low-voltage circuit with double insulation in accordance with IEC1010: sum of the voltages of relay output and power supply max. 300 V

FEM55
- R = (U - 11 V) / 16.8 mA
- U = connection DC voltage 11 to 36 V (in wet environment DC 11 to 35 V)

FEM57
- Floating relay contacts in the connected switching unit Nivotester
- For contact load, see the Technical Data of the switching unit

FEM58
- See the "Technical Data" of the connected isolating amplifier according to IEC 60947-5-6 (NAMUR)
- Connection also to isolating amplifiers which have special safety circuits (I = 3 to 4.8 mA)

Galvanic isolation

- FEM51, FEM52, FEM55: between sensor and power supply
- FEM54: between sensor, power supply and load
- FEM57, FEM58: see the connected switching unit

Power supply

Supply voltage

- FEM51: 19 to 253 V
- FEM55: DC 11 to 36 V
- FEM57: DC 9.5 to 12.5 V
- FEM58: DC 8.2 V ±20 %

Power consumption

- FEM51: < 1.0 W
- FEM52: max. 0.86 W
- FEM54: max. 1.5 W
- FEM55: < 600 mW
- FEM57: < 150 mW
- FEM58: < 8 mW for I < 1 mA; < 36 mW for I = 2.2 to 4.8 mA

Current consumption

- FEM52: max. 16 mA
- FEM57: 10 to 13 mA

Electrical connection

Electronic insert FEM51 (AC 2-wire)

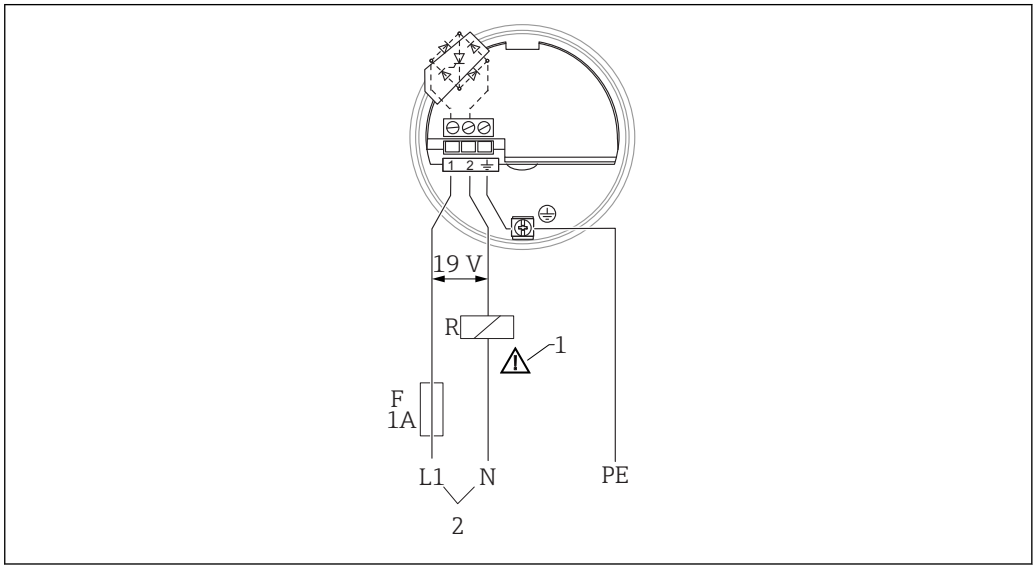

A0044396

1 *External load "R" must be connected*
2 *AC: U~max. 253 V, 50/60 Hz*

Power supply

- Short-circuit protection
- Residual current consumption (I_R): < 4 mA; 5.5 mA for short fork (in moment of switch-off < 1 mA for 100 ms)
- Separation voltage: 3.6 kV

Two-wire AC connection

Always connect in series with a load!

Consider the following:
- The residual current consumption in the blocked state
- That for low voltage:
  - the voltage drop across the load is such that the minimum terminal voltage at the electronic insert (19 V) when blocked is not undershot
  - the voltage drop across the electronics when switched through is observed (up to 12 V)
- When selecting the relay, pay attention to the holding power/rated power

Electronic insert FEM52 (DC PNP)

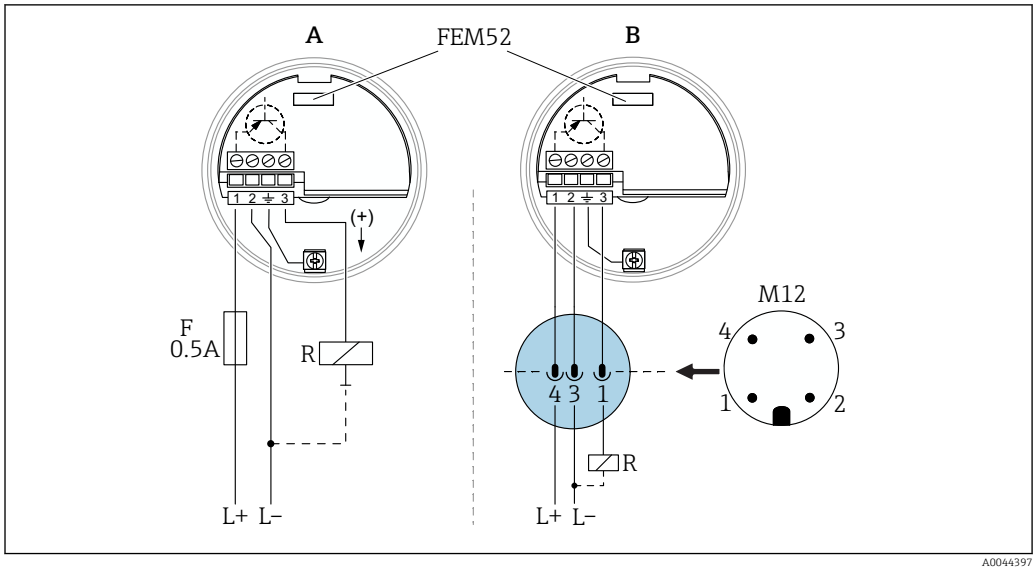

DC U⎓ 10 to 55 V
A With cable entry wired by customer (order code "080", option "2", "3", "4", "7")
B With M12 plug wired at the factory (order code "080", option "1")

Power supply

- Reverse polarity protection/short-circuit protection
- Direct current DC: 10 to 55 V
- Separation voltage: 3.6 kV

Three-wire DC connection with cable entry / M12 plug

Consider the following:
- Preferably used with programmable logic controllers (PLC)
- DI modules as per EN 61131-2
- Positive signal at switch output of electronics module (PNP)

Electronic insert FEM54 (AC/DC with relay output)

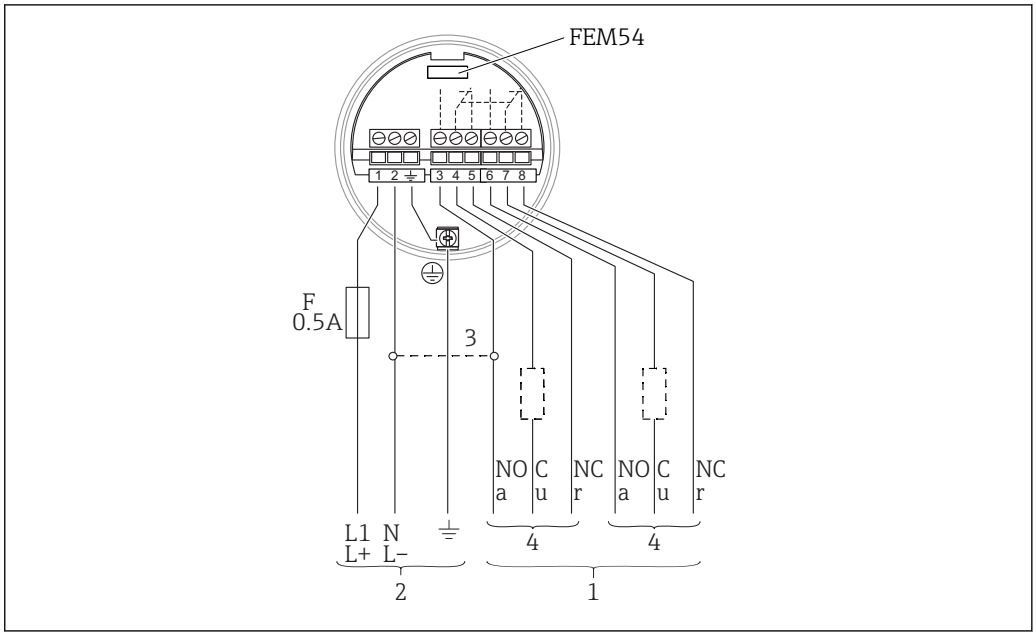

1 *Relay outputs: normally open/closed (NO, NC)*
2 *AC: U~ 19 to 253 V, DC: U⎓ 19 to 55 V*
3 *When bridged, the relay output works with NPN logic*
4 *Load*

Power supply

- Reverse polarity protection/short-circuit protection
- Alternating voltage AC: 19 to 253 V, $^{50}/_{60}$ Hz
- Direct current DC: 19 to 55 V

Universal current connection with relay output (DPDT)

Pay attention to the different voltage ranges for AC and DC.

Consider the following:
When connecting a device with high inductance, provide a spark arrester to protect the relay contact. A fine-wire fuse (depending on the connected load) protects the relay contact in the event of a short-circuit. The relay contacts switch simultaneously.

Electronic insert FEM55 (8/16 mA)

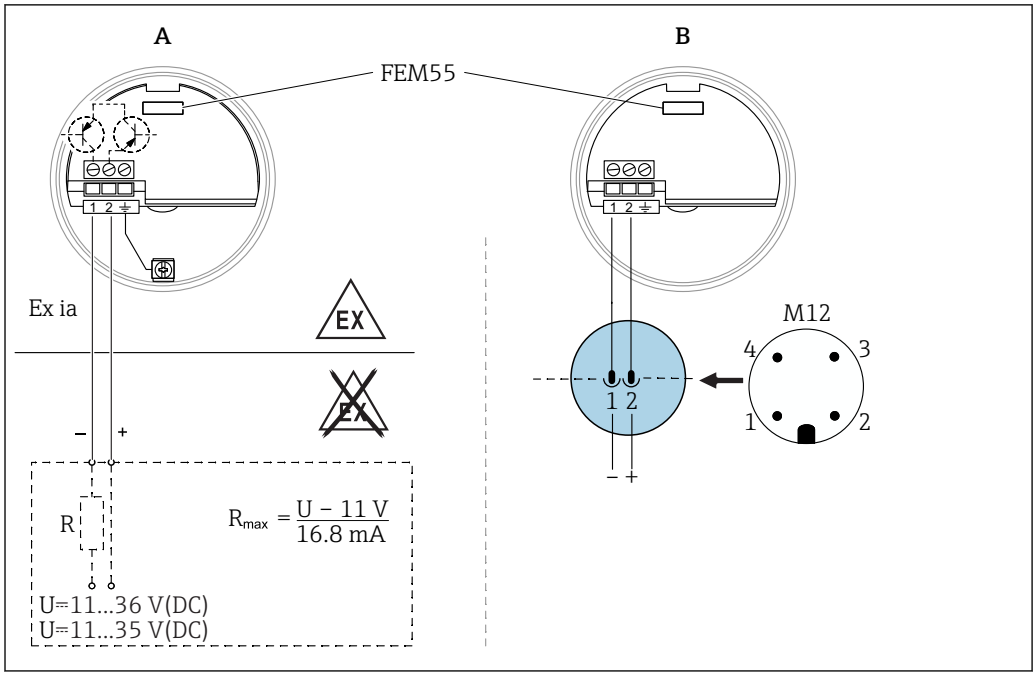

A With cable entry wired by customer (order code "080", option "2", "3", "4", "7")
B With M12 plug wired at the factory (order code "080", option "1")

Power supply

- Reverse polarity protection/short-circuit protection
- Separation voltage: 3.6 kV

Two-wire connection for separate switching unit with cable entry / M12 plug

Consider the following:
- For example, for connection to programmable logic controllers (PLC), AI modules 4-20 mA as per EN 61131-2. Output signal jump from high to low current on point level.
- Only use power units with safe galvanic isolation (e.g. SELV).

Electronic insert FEM57 (PFM)

Only in conjunction with the standard fork (fork length 155 mm (6.1 in)).

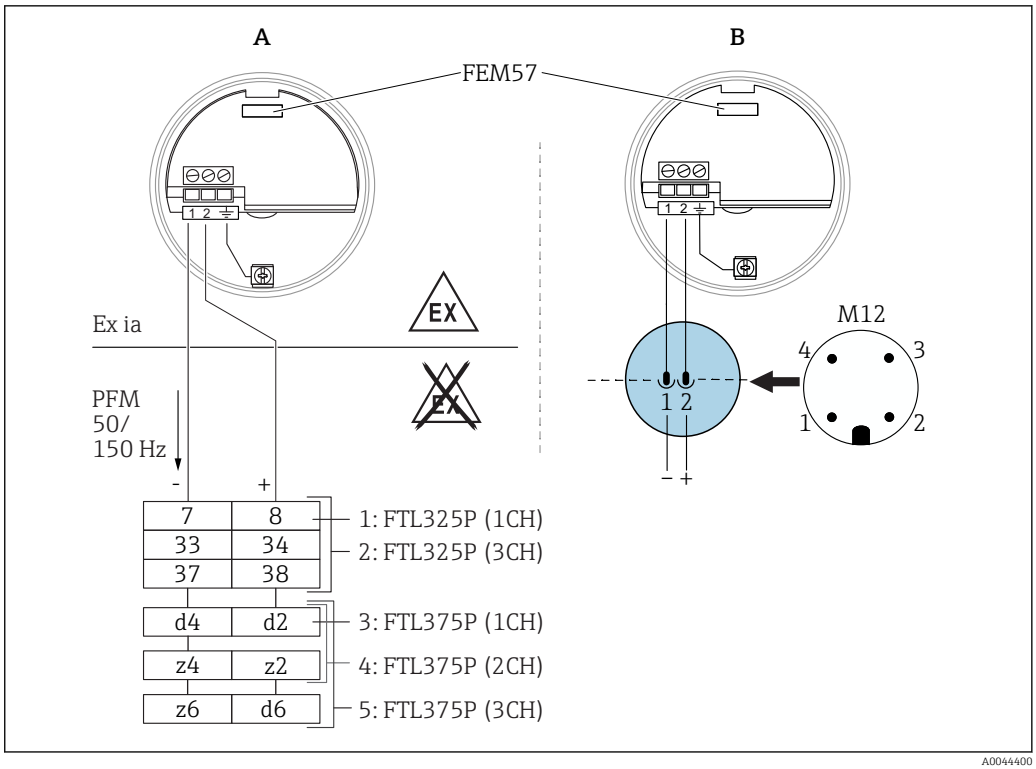

A With cable entry wired by customer (order code "080", option "2", "3", "4", "7")
B With M12 plug wired at the factory (order code "080", option "1")

Power supply

- Reverse polarity protection/short-circuit protection
- Separation voltage: 2.6 kV

Two-wire connection for separate switching unit with cable entry / M12 plug

For connecting to Nivotester (see graphic) from Endress+Hauser. Output signal jump of PFM signal from high to low frequency when sensor is covered. Switching between minimum/maximum safety at the Nivotester.

Additional "self test" function: following an interruption in the power supply, a test cycle is activated which tests the sensor and electronics without any change in level. The operating elements must be configured as follows for this purpose:

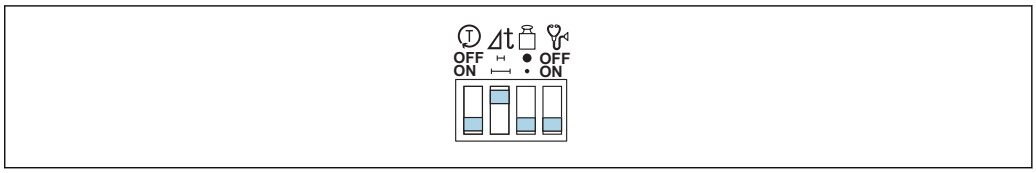

The test is activated at the switching unit. LEDs indicate the progress of the test.

Electronic insert FEM58 (NAMUR H-L edge)

Only in conjunction with the standard fork (fork length 155 mm (6.1 in)).

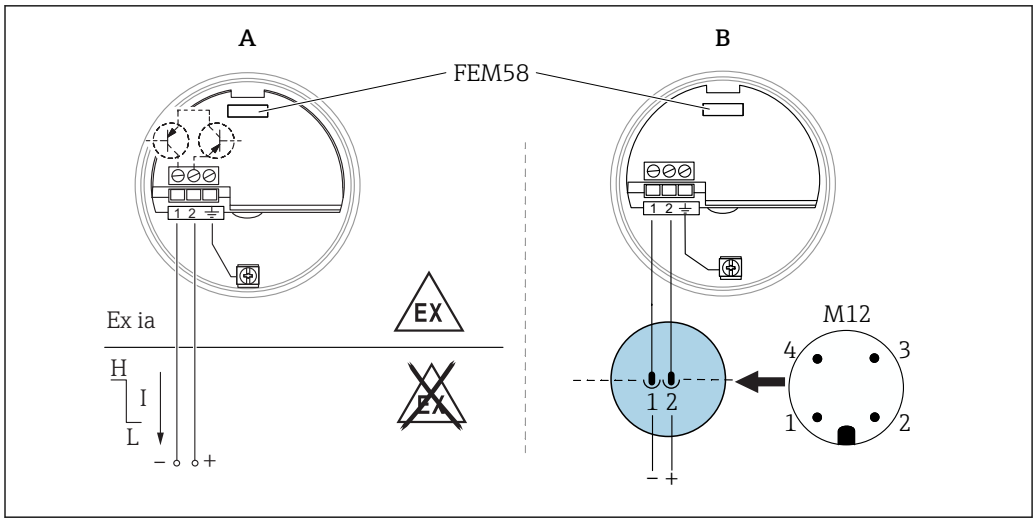

A Isolating amplifier as per IEC 60947-5-6 (NAMUR); with cable entry wired by customer (order code "080", option "2", "3", "4", "7")
B With M12 plug wired at the factory (order code "080", option "1")

Power supply

- Separation voltage: 1.9 kV
- Connection data interface: IEC 60947-5-6

Two-wire connection for separate switching unit with cable entry / M12 plug

Consider the following:
- For connection to the isolating amplifier as per NAMUR (IEC 60947-5-6), e.g. FTL325N or FTL375N from Endress+Hauser
- H-L edge: output signal jump from high to low current on point level
- Additional function: test key on the electronic insert. Pressing the key breaks the connection to the isolating amplifier.

- For Ex d applications, the additional function can only be used if the housing is not exposed to an explosive atmosphere.
- Connection to multiplexer: set clock time to min. 5 s.

Switching on the power supply

When the power supply is switched on, the switching status of the outputs corresponds to the signal on alarm. The correct switching status is assumed after a maximum of 3 s.

Cable entries

Housing-specific: screw terminal on electronic insert

Coupling M20x1.5 for cable:
- Nickel-plated brass: ø7 to 10.5 mm (0.28 to 0.41 in)
- Plastic: ø5 to 10 mm (0.2 to 0.38 in)
- Stainless steel: ø7 to 12 mm (0.28 to 0.47 in)

Cable specification

A normal instrument cable suffices within the indicated standards and guidelines for interference immunity. If higher interference levels are present, use a shielded cable.

Temperature resistance of the connection cables

In non-Ex applications the connecting cables must withstand the ambient temperature +5K. In the case of Ex applications, the specifications of the relevant certificate (XA) must be observed.

Connection cables

- Electronic inserts: cross-section max. 2.5 mm^2 (13 in^2); strand in ferrule to DIN 46228
- Protective earth in housing: cross-section max. 2.5 mm^2 (13 in^2)
- Equipotential bonding connection on housing: cross-section max. 4 mm^2 (11 in^2)

Ripple

FEM52: max. 1.7 V, 0 to 400 Hz

Overvoltage protection	FEM51, FEM52, FEM54, FEM55: overvoltage category II

Installation

Open the device only in a dry environment!

If the degree of protection IP66/67 or IP66/68 is ensured, the device may be installed in an environment of wet locations.

Installation instructions

Sensor selection and arrangement

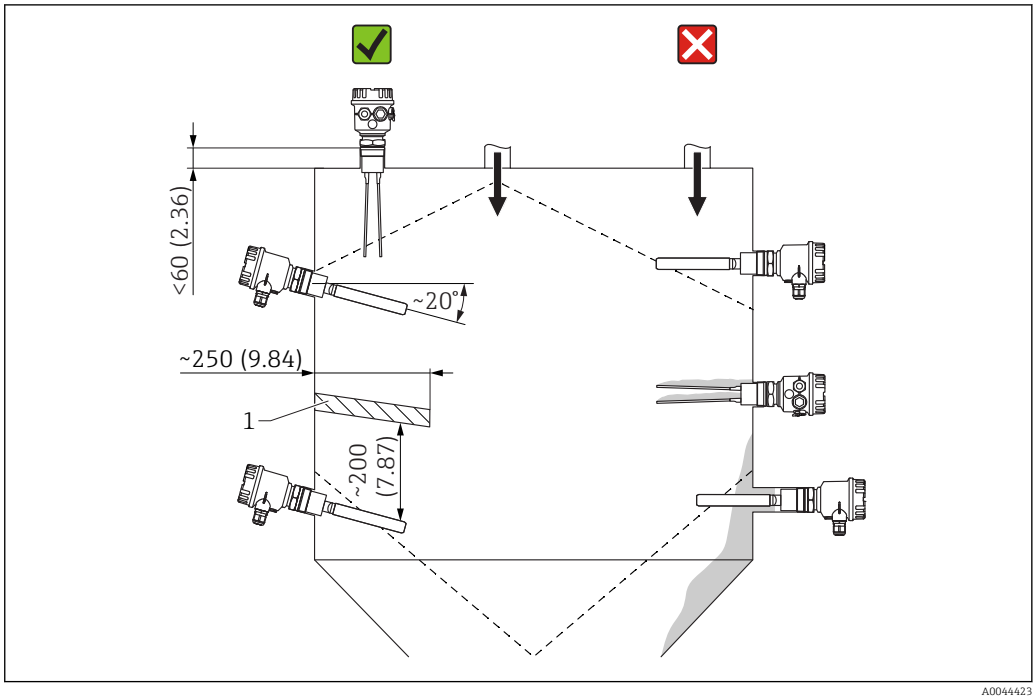

Unit of measurement mm (in)

1 Protective cover (provided by the customer)

Environment

Ambient temperature range	−50 to +70 °C (−58 to +158 °F); With F16 housing: −40 to +70 °C (−40 to +158 °F)
Storage temperature	−50 to +85 °C (−58 to +185 °F)
Operating height	As per IEC 61010-1 Ed.3 ▪ Up to 2 000 m (6 500 ft) above sea level ▪ Can be extended to 3 000 m (9 800 ft) above sea level if overvoltage protection (OVP) is used
Pollution degree	PD 1
Climate class	Climate protection as per DIN IEC 68 Part 2-38, Fig. 2a
Vibration resistance	As per EN 60068-2-64: 0.01 g^2/Hz

Degree of protection	▪ F15, F16, F17 housing, separate housing: IP66/IP67, NEMA4X ▪ F13, T13, F27 housing: IP66/IP68, NEMA4X/6P
Shock resistance	As per EN 60068-2-27: 30 g
Electrical safety	IEC 61010, CAN/CSA-C22.2 No. 61010-1-04 US standard UL 61010-1, 2nd Edition
Electromagnetic compatibility (EMC)	▪ Interference emission according to EN 61326, Electrical Equipment Class B ▪ Interference immunity according to EN 61326, Annex A (Industrial) and NAMUR Recommendation NE21 (EMC)

Process

Medium temperature range

Non-hazardous area and certificates Ex d + DIP

Permitted ambient temperature T_a at the housing depending on the process temperature T_p in the vessel.

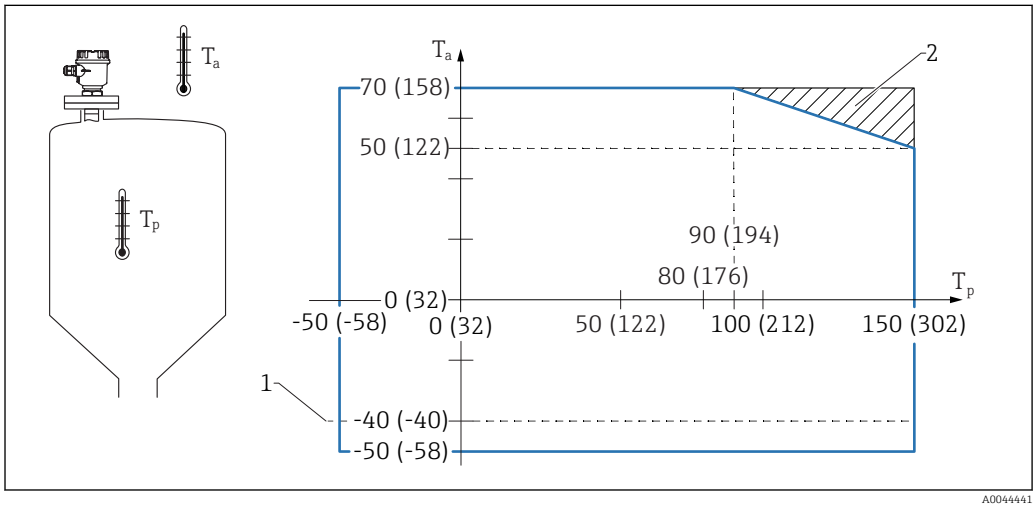

1 Engineering unit: °C (°F)

1 Restriction to −40 °C (−40 °F) with F16 housing
2 Additionally utilizable temperature range with temperature spacer

High temperature

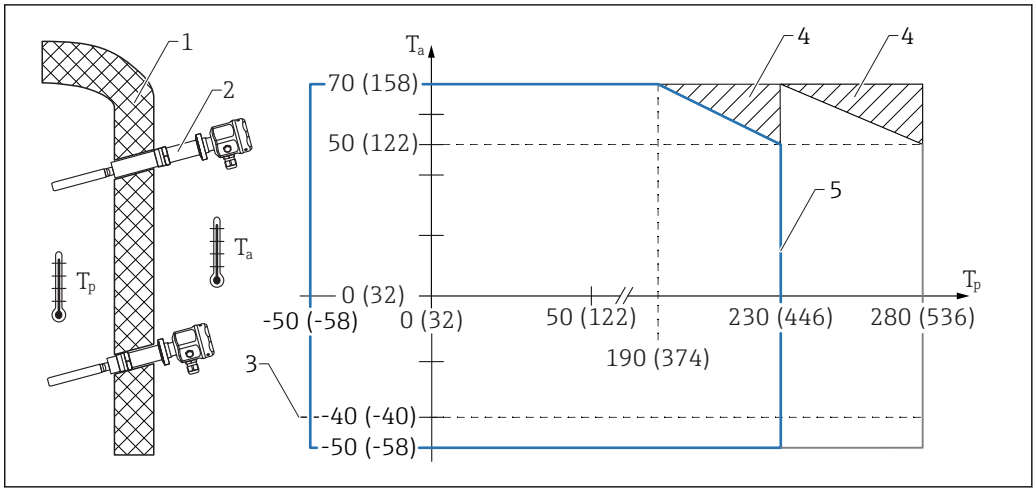

1 Insulation
2 Insulation
3 Restriction to −40 °C (−40 °F) with F16 housing
4 Additionally utilizable temperature range if the temperature spacer is used outside the insulation "2"
5 Anti-stick coating possible up to max. 230 °C (446 °F)

Medium pressure range

−1 to +25 bar (−14.5 to +362.5 psi)

Max. working pressure (MWP):
25 bar (362.5 psi)

The range indicated can be reduced by the choice of process connection. The nominal pressure (PN) indicated on the flanges refers to a reference temperature of +20 °C (+68 °F), for ASME flanges to 100 °F. Observe pressure-temperature dependency.

Please refer to the following standards for the pressure values permitted at higher temperatures:
- EN 1092-1: 2001 Tab.18
  In terms of their stability-temperature property, the materials 1.4404 and 1.4435 are grouped in EN 1092-1 table 18 under 13E0. The chemical composition of the two materials can be identical.
- ASME B 16.5a - 1998 Tab. 2-2.2 F316
- ASME B 16.5a - 1998 Tab. 2.3.8 N10276
- JIS B 2220

Thermal shock

- Maximum 120 K
- At high temperature 260 K

Static pressure

State of aggregation

Solids

Grain size

≤ 10 mm (0.39 in)

Bulk density

Depends on the density setting at the electronic insert:
- Standard fork: ≥ 10 or 50 g/l
  (for light media)
- Short fork: ≥ 50 or 200 g/l
  (for confined installation conditions, high lateral load and increased buildup))

Lateral load (static)

The following graphic shows the maximum permitted lateral load F in N (lbf) in relation to the length L in mm (in).

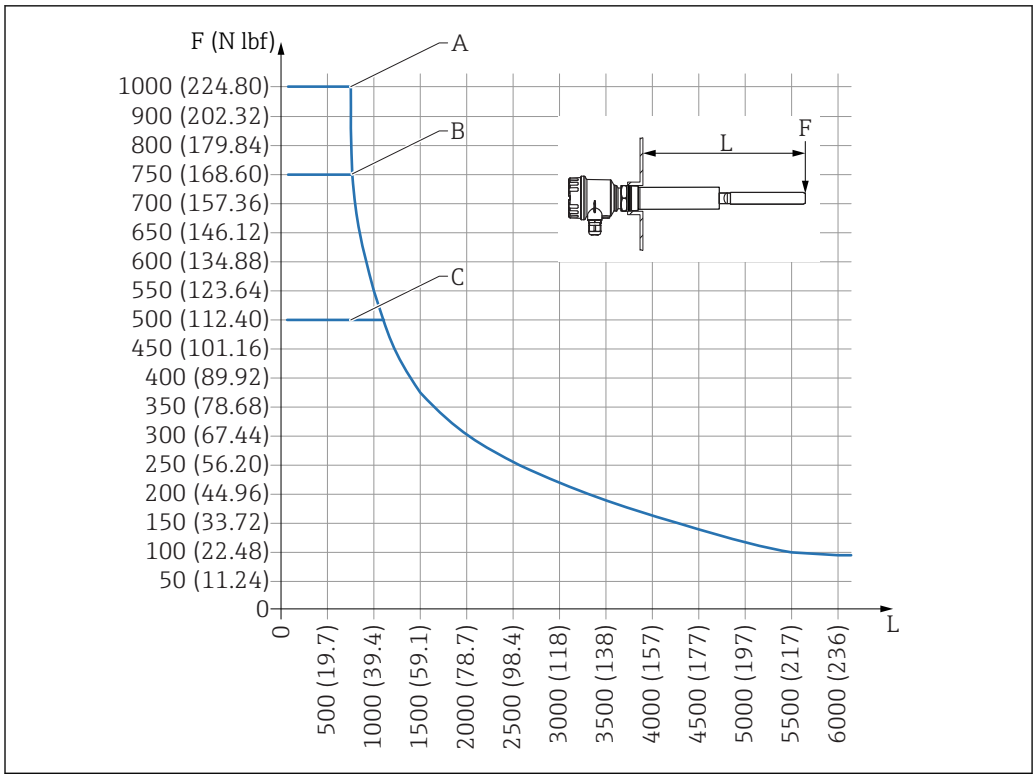

Unit of measurement mm (in)

A Short fork, sensor Ø36 mm (1.42 in)
B Short fork, sensor Ø43 mm (1.69 in)
C Standard fork, sensor Ø36 mm (1.42 in)

Burst pressure

100 bar (1 450 psi)

Mechanical construction

Design, dimensions

Polyester housing F16

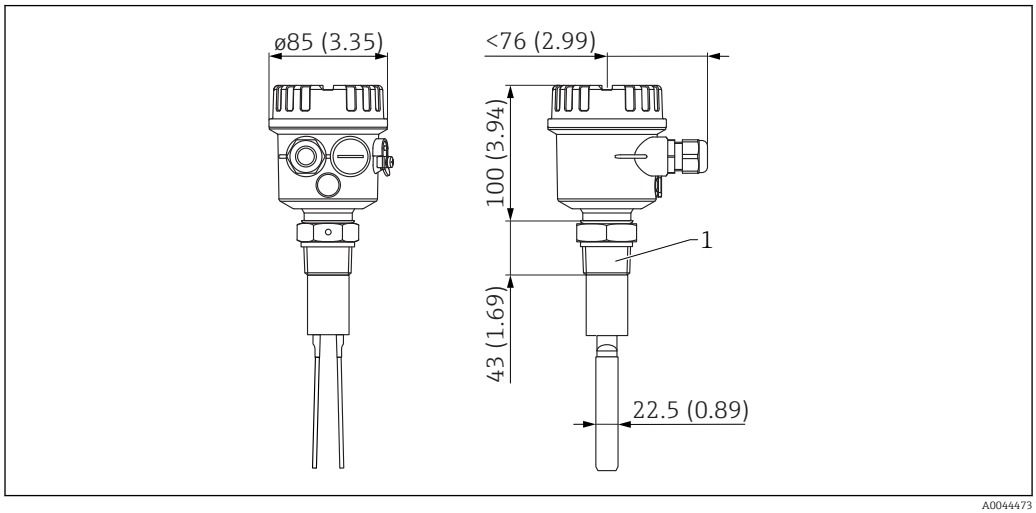

Unit of measurement mm (in)

1 Process connection: R 1½, 1½ NPT, 1¼ NPT

Stainless steel housing F15

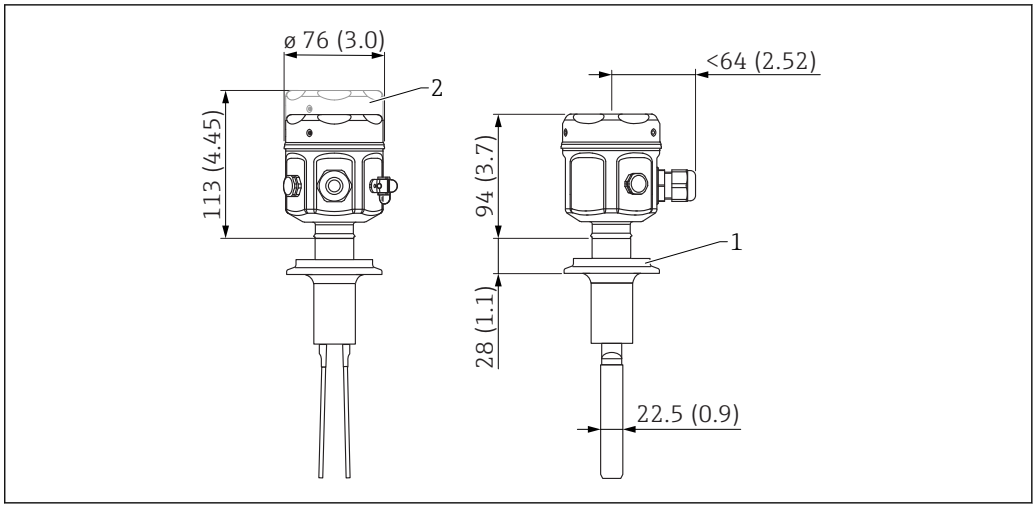

Unit of measurement mm (in)

1 Process connection: Tri-Clamp
2 Cover with glass insert

Aluminum housing F17

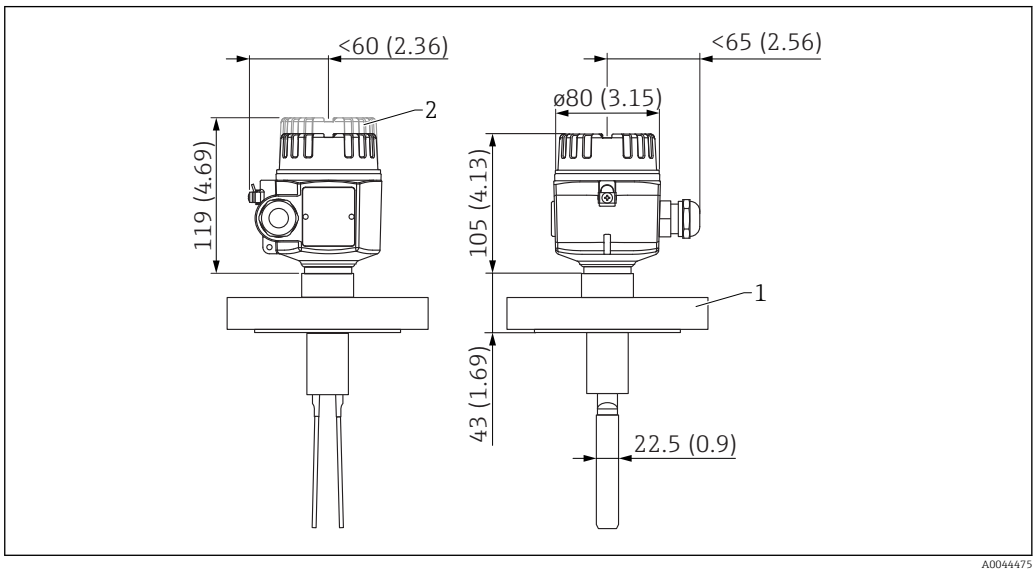

Unit of measurement mm (in)

1 Process connection: flange
2 Cover with glass insert

Aluminum housing F13 (Ex d), stainless steel housing F27 (Ex d)

Adaption to sensor threaded.

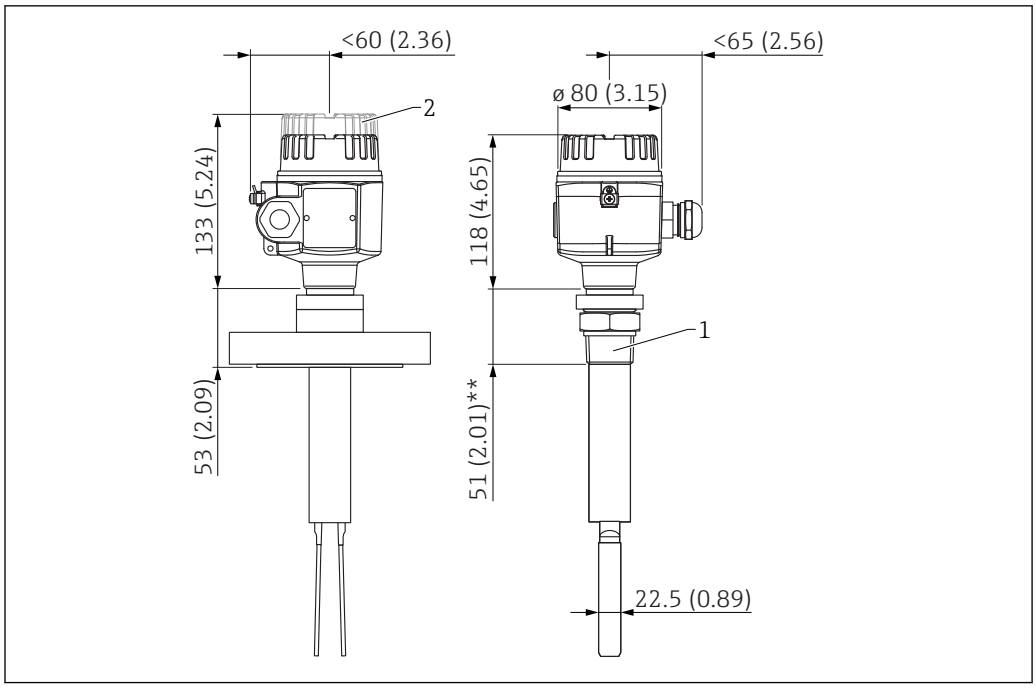

Unit of measurement mm (in)

1 Process connection: flange, R 1½ ,1½ NPT, 1¼ NPT
2 Cover with glass insert (only for aluminum housing F13)
*** For Tri-Clamp 36 mm (1.42 in)*

Aluminum housing T13 (Ex de)

With separate connection compartment.

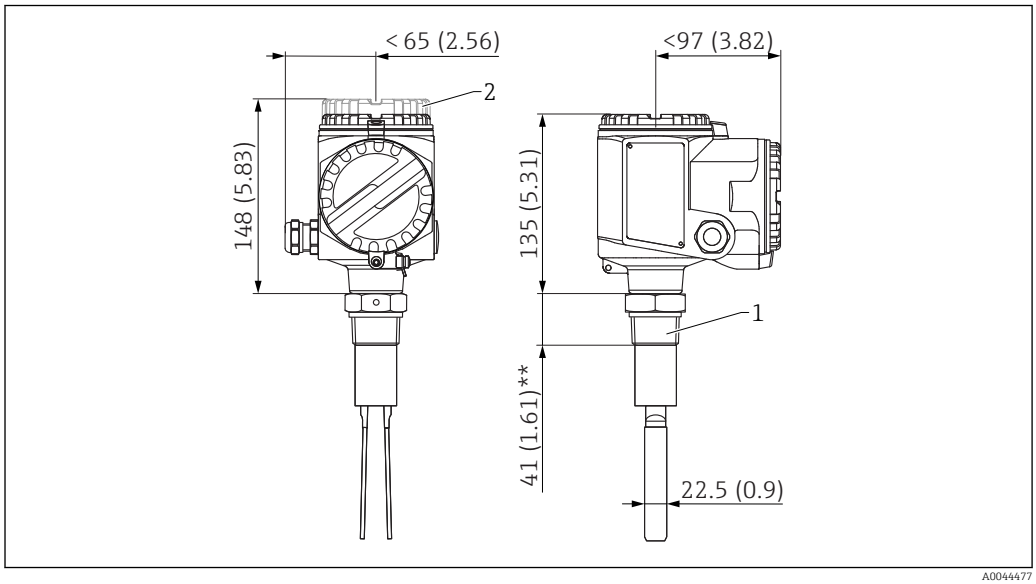

Unit of measurement mm (in)

1 Process connection: R 1½, 1½ NPT, 1¼ NPT
2 Cover with glass insert
*** For Tri-Clamp 16 mm (0.63 in)*

In the case of Ex d(e) for FTM51 and FTM52: for flange and thread dimensions, see the previous graphic

Wall and pipe mounting

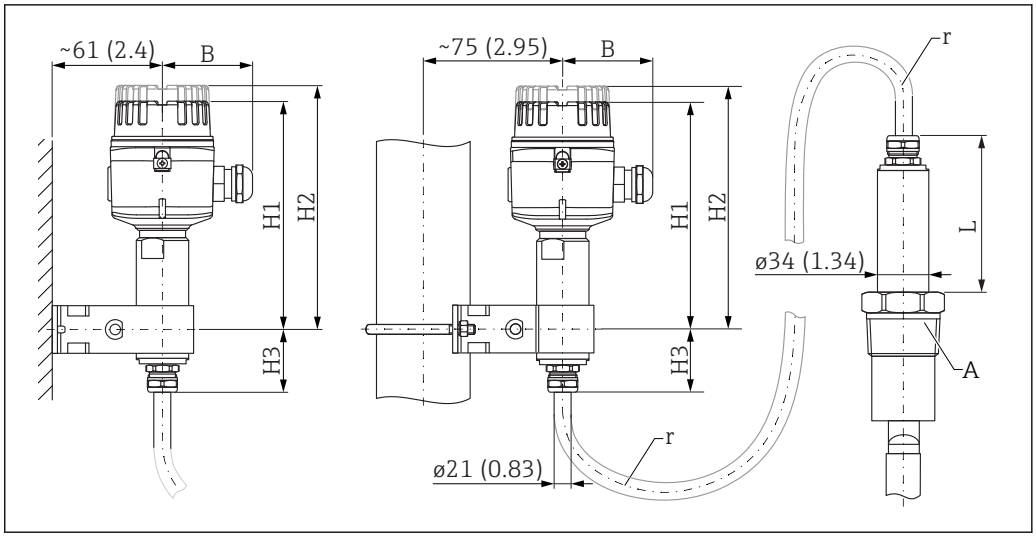

Unit of measurement mm (in)

Polyester housing F16
- B: 76 mm (2.99 in)
- H1: 155 mm (6.1 in)
- H3: 41 mm (1.61 in)
- L: 108 mm (4.25 in) + optional temperature spacer → 🖹 26
- r: bending radius ≥100 mm (3.94 in); with armored hose ≥75 mm (2.95 in)

Stainless steel housing F15
- B: 64 mm (2.52 in)
- H1: 166 mm (6.54 in)
- H2 (cover with glass insert): 185 mm (7.28 in)
- H3: 41 mm (1.61 in)
- L: 108 mm (4.25 in) + optional temperature spacer → 🖹 26
- r: bending radius ≥100 mm (3.94 in); with armored hose ≥75 mm (2.95 in)

Aluminum housing F17
- B: 65 mm (2.56 in)
- H1: 160 mm (6.3 in)
- H2 (cover with glass insert): 174 mm (6.85 in)
- H3: 62 mm (2.44 in)
- L: 108 mm (4.25 in) + optional temperature spacer → 🖹 26
- r: bending radius ≥100 mm (3.94 in); with armored hose ≥75 mm (2.95 in)

Aluminum housing F13, stainless steel housing F27
- B: 65 mm (2.56 in)
- H1: 243 mm (9.57 in)
- H2 (cover with glass insert): 258 mm (10.2 in)
- H3: 62 mm (2.44 in)
- L: 108 mm (4.25 in) + optional temperature spacer → 🖹 26
- r: bending radius ≥100 mm (3.94 in); with armored hose ≥75 mm (2.95 in)

Aluminum housing T13 (separate connection compartment)
- B: 97 mm (3.82 in)
- H1: 260 mm (10.2 in)
- H2 (cover with glass insert): 273 mm (10.7 in)
- H3: 62 mm (2.44 in)
- L: 108 mm (4.25 in) + optional temperature spacer → 🖹 26
- r: bending radius ≥100 mm (3.94 in); with armored hose ≥75 mm (2.95 in)

Dimensions

Compact version

1½ NPT ANSI B 1.20.1, R 1½ EN10226 [1)]

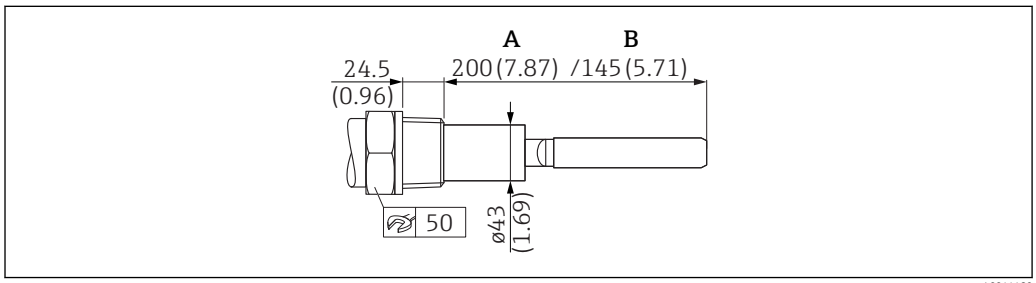

Unit of measurement mm (in)

A Length of standard fork
B Length of short fork

Order options

- 1½ NPT ANSI B 1.20.1: order code "020", option "GJ"
- R 1½*** EN10226: order code "020", option "GG"

Accessories

- G2 DIN ISO 228-1: Order No.: 52024631
- 2 NPT ANSI B 1.20.1: Order No. 52024630

Pressure, temperature specifications

- Max. 25 bar (362.5 psi)
- Max. +280 °C (+536 °F)

1½ NPT ANSI B 1.20.1

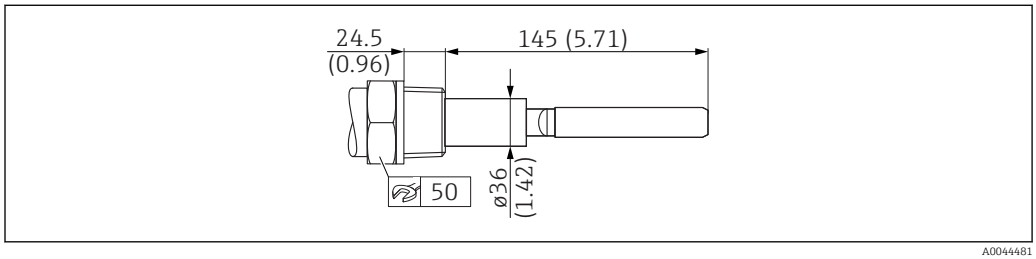

Unit of measurement mm (in)

Order options

Order code "020", option "GX"

Pressure, temperature specifications

- Max. 25 bar (362.5 psi)
- Max. +150 °C (+302 °F)

1) R1½: Tapered R male threads (e.g. Soliphant process connection) can be screwed tightly into cylindrical G female threads (e.g. welding bosses in a silo), as the same nominal dimensions apply.

1¼ NPT ANSI B 1.20.1

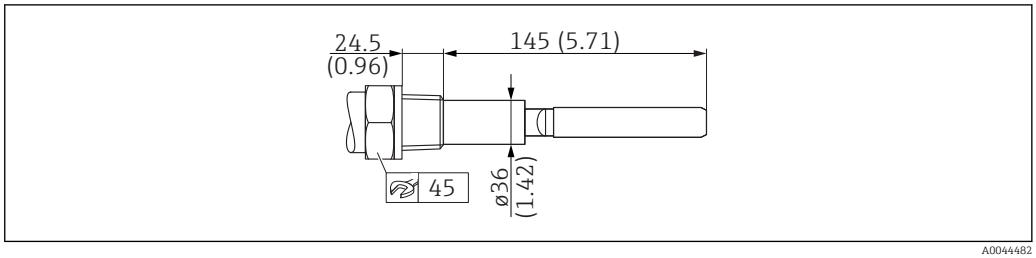

Unit of measurement mm (in)

Order options

Order code "020", option "GK"

Pressure, temperature specifications

- Max. 25 bar (362.5 psi)
- Max. +150 °C (+302 °F)

Flange ANSI B 16.5, EN 1092-1 (DIN 2527 B), JIS B2220

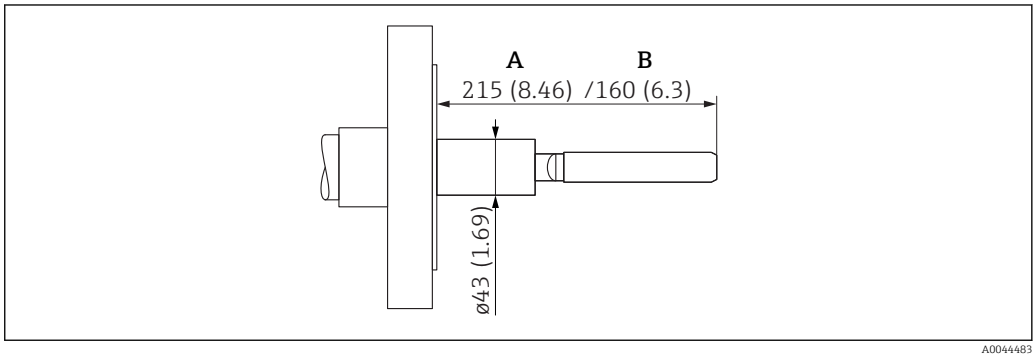

Unit of measurement mm (in)

A Length of standard fork
B Length of short fork

Order options

- ANSI B 16.5 flange: order code "020", option "A#"
- EN 1092-1 (DIN 2527 B) flange: order code "020", option "B#"
- JIS B2220 flange: order code "020", option "K#"

Accessories

Seal according to design on site, FDA approval available.

Pressure, temperature specifications

See flange nominal pressure; however
- Max. 25 bar (362.5 psi)
- Max. +280 °C (+536 °F)

Tri-Clamp 2" ISO2852

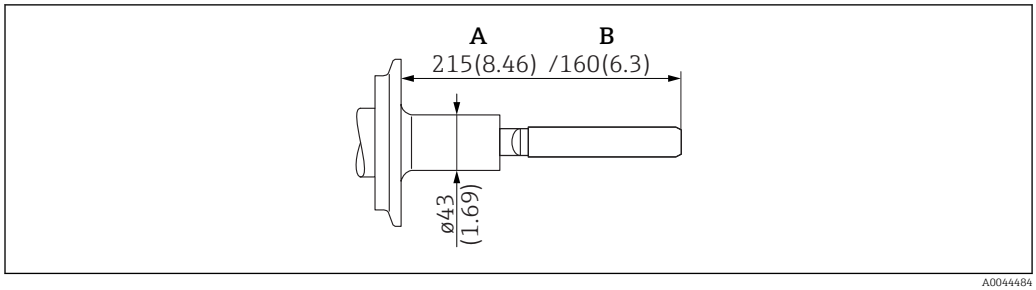

Unit of measurement mm (in)

A Length of standard fork
B Length of short fork

Order options

Order code "020", option "TD"

Accessories

Clamping ring and front seal installed on site, FDA approval available.

Pressure, temperature specifications

- Max. 16 bar (232 psi)
- Max. +120 °C (+248 °F)

Fork versions

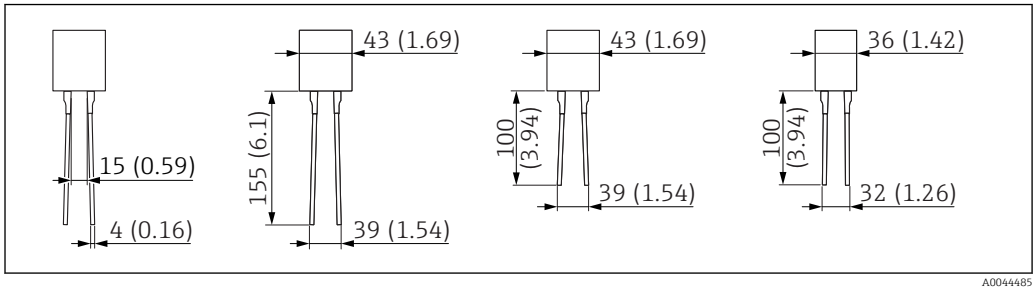

Unit of measurement mm (in)

Versions with temperature spacer

Length and version depend on temperature and certificate.

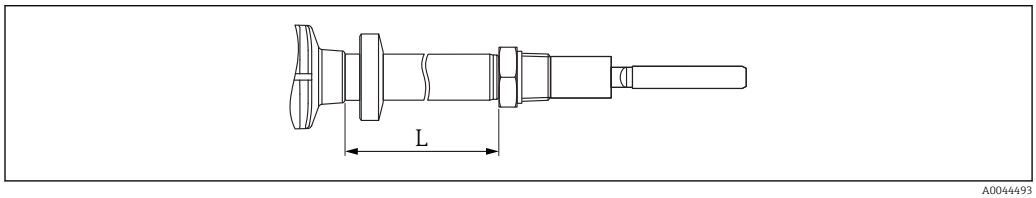

Housing F15, F16, F17

Dimension L
- 150 °C (302 °F): 145 mm (5.71 in)
- 230 °C (446 °F): 175 mm (6.89 in)
- 280 °C (536 °F): 215 mm (8.46 in)

Housing F13, F27, T13

Dimension L
- 150 °C (302 °F): 145 mm (5.71 in), 165 mm (6.5 in)
- 230 °C (446 °F): 165 mm (6.5 in)
- 280 °C (536 °F): 205 mm (8.07 in)

Certificates

- 150 °C (302 °F), 145 mm (5.71 in): Order code "010", option "A", "C", "D", "F", "X", "1", "2", "3", "4", "7", "8",
- 150 °C (302 °F), 165 mm (6.5 in): Order code "010", option "H", "Z", "5", "6"

Weight

Depends on type; see last column "Additional weight" in the ordering information

Materials

Materials in contact with process

- Process connection and extension pipe: 316L (1.4404, 1.4435)
- Tuning fork: 316L (1.4404, 1.4435)
- Flanges: 316L (1.4435 or 1.4404)
- PTFE coating: minimizes buildup, FDA compliant
- ETFE coating: minimizes corrosion

Materials not in contact with process

- Seal between process connection/housing: EPDM
- Terminals on outside of housing: 304 (1.4301), 316L (1.4404)
- Polyester housing F16: PBT-FR with PBT-FR cover or with PA12 transparent cover,
  - Cover seal: EPDM
  - Glued nameplate: polyester film (PET)
  - Pressure compensation filter: PBT-GF20
- Stainless steel housing F15: 316L (1.4404)
  - Cover seal: silicone/PTFE
  - Cover clamp: 316L (1.4404)
  - Pressure compensation filter: PA, VMQ/VA
  - Nameplate labeling directly on the device
- Aluminum housing F17/F13: EN-AC-AlSi10Mg, plastic-coated,
  - Cover seal: EPDM
  - Cover clamp: nickel-plated brass
  - Pressure compensation filter (only F17): silicone
  - Nameplate: 304 (1.4301)
- Stainless steel housing F27: 316L (1.4435)
  - Cover seal: FVMQ (optional: EPDM seal available as spare part)
  - Cover clamp: 316L (1.4435)
  - Nameplate: 316L (1.4404)
- Aluminum housing T13: EN-AC-AlSi10Mg, plastic-coated
  - Cover seal: EPDM
  - Cover clamp: nickel-plated brass
  - Nameplate: 304 (1.4301)

Transmitter housing

- Polyester: F16 housing
- Stainless steel:
  - F15 housing
  - F27 housing
- Aluminum housing:
  - F17 housing
  - F13 housing
  - T13 housing

Cable entries

Housing-specific: screw terminal on electronic insert.

Coupling M20x1.5 for cable:
- Nickel-plated brass: ø7 to 10.5 mm (0.28 to 0.41 in)
- Plastic: ø5 to 10 mm (0.2 to 0.38 in)
- Stainless steel: ø7 to 12 mm (0.28 to 0.47 in)

Surface refinement

- In the area of the welding seam, the surface roughness depends on the production technique and is not defined
- In the area of the fork base, a deviation of the surface roughness can occur
- Electropolished for simple cleaning and to avoid buildup and corrosion. Choice of surface roughness (version => type): Ra < 0.76 µm
- Devices whose sensor (fork and pipe) is completely electropolished are exempted from CRN approval

Electropolishing; device with thread

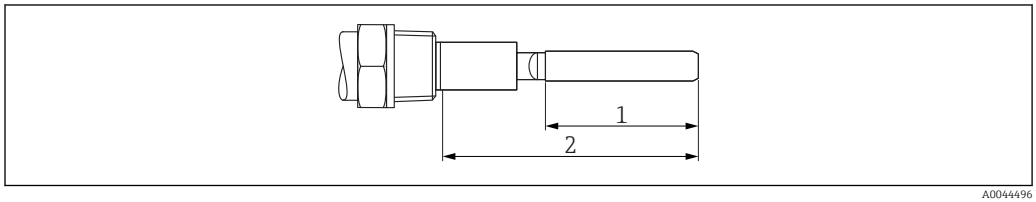

A0044496

1 Electropolished fork (0.76 µm)
2 Fork and pipe electropolished as far as the welding seam on the process connection (0.76 µm)

Electropolishing; device with flange

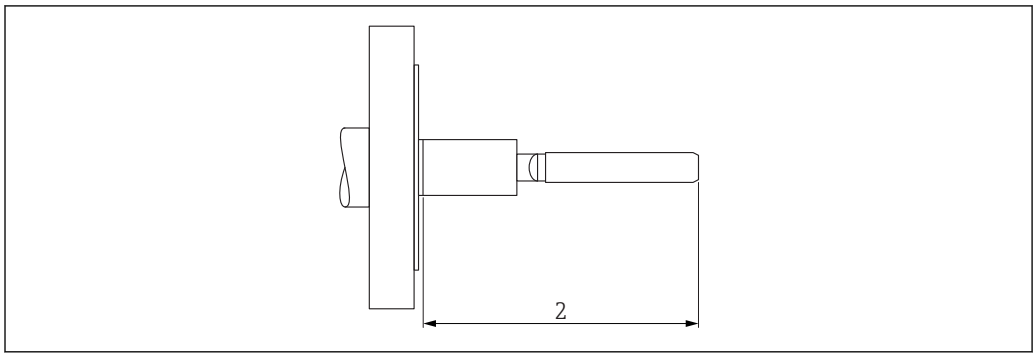

A0044497

2 Fork and pipe electropolished as far as the welding seam on the process connection (0.76 µm)

Coating; device with thread

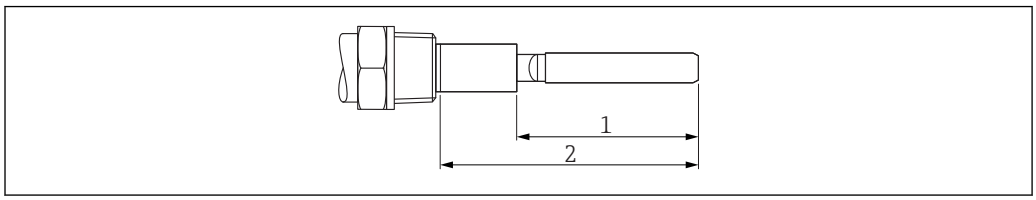

A0044498

1 Fork coated
2 Fork and pipe coated as far as the welding seam on the process connection

Coating; device with flange

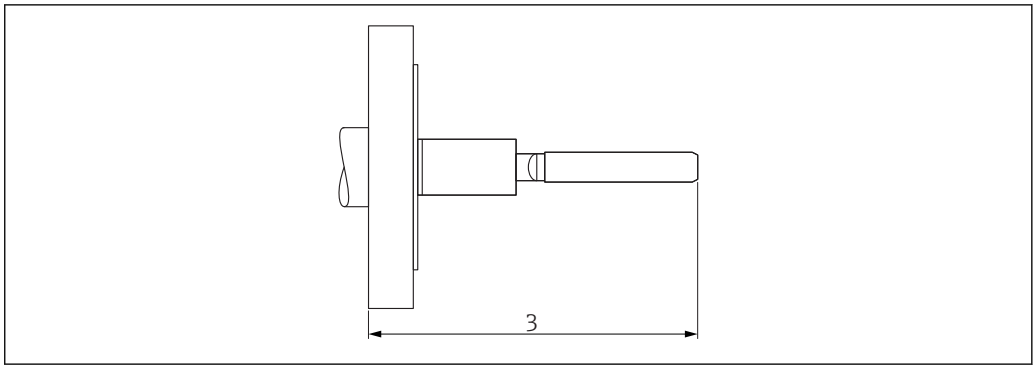

3 Fully coated

Human interface

Display elements

The switch settings in the following graphics are in the as-delivered state.

FEM51

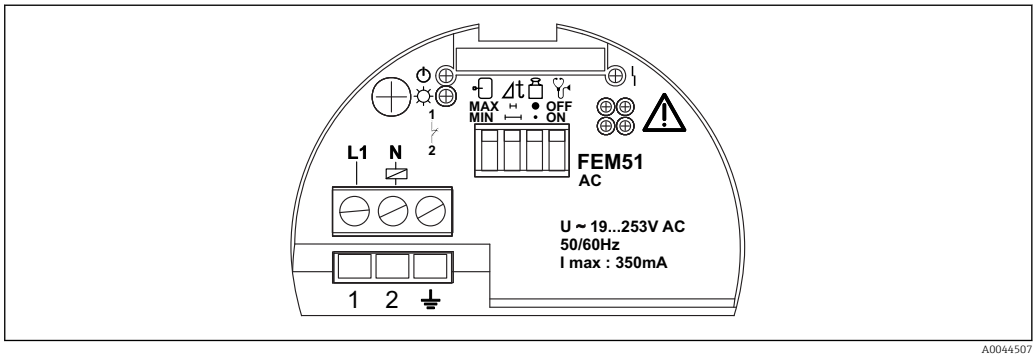

- Green LED is lit: indicates the operational status
- Yellow LED is lit: indicates the switching status
- Red LED
  - flashing: alternately with green LED if maintenance is required
  - lit: in event of device failure

FEM52

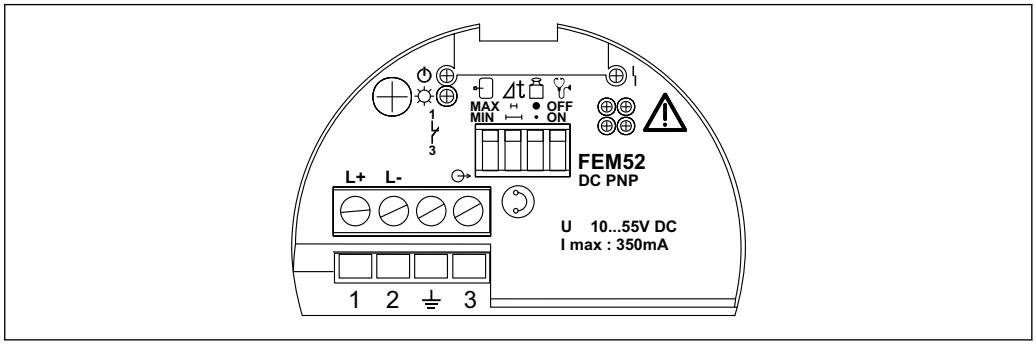

- Green LED is lit: indicates the operational status
- Yellow LED is lit: indicates the switching status
- Red LED
  - flashing: indicates maintenance is required
  - lit: indicates device failure

FEM54

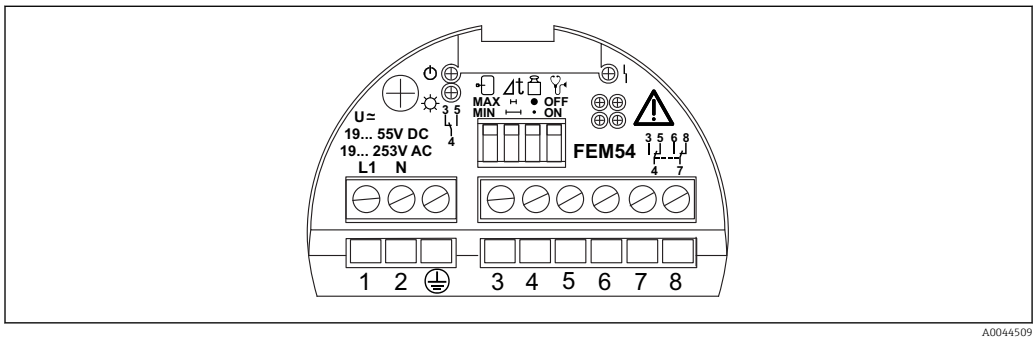

A0044509

- Green LED is lit: indicates the operational status
- Yellow LED is lit: indicates the switching status
- Red LED
  - flashing: indicates maintenance is required
  - lit: indicates device failure

FEM55

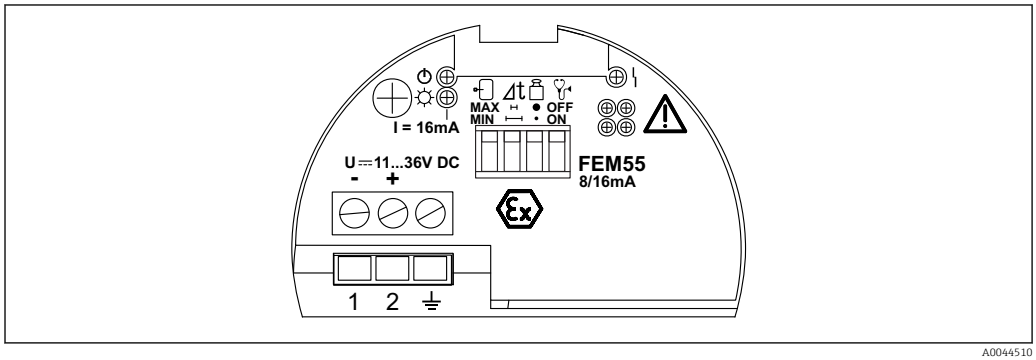

A0044510

- Green LED is lit: indicates the operational status
- Yellow LED is lit: indicates the switching status
- Red LED
  - flashing: indicates maintenance is required
  - lit: indicates device failure

FEM57

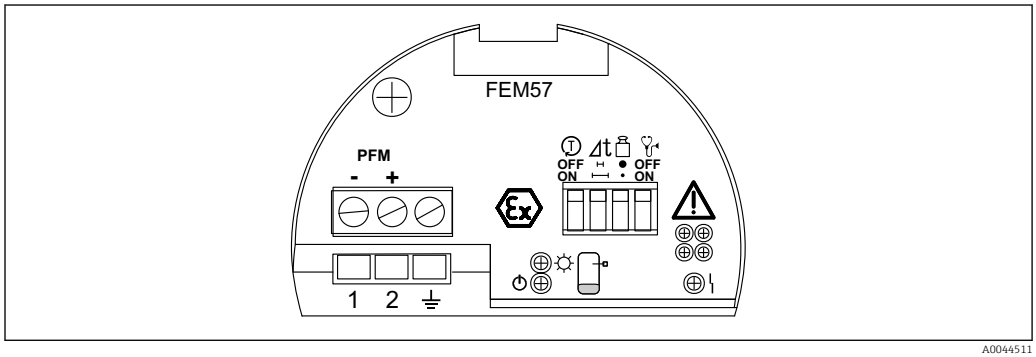

A0044511

- Green LED is lit: indicates the operational status
- Yellow LED is lit: indicates the switching status
- Red LED
  - flashing: indicates maintenance is required
  - lit: indicates device failure

FEM58

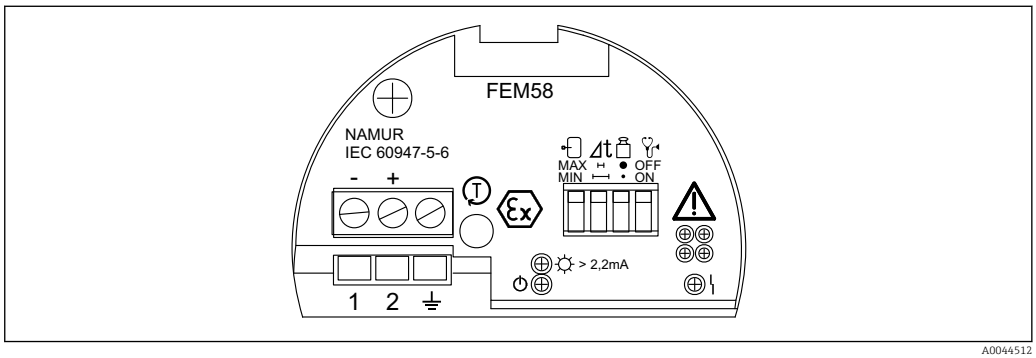

A0044512

- Green LED is lit: indicates the operational status
- Yellow LED is lit: indicates the switching status
- Red LED
  - flashing: alternately with green LED if maintenance is required
  - lit: indicates device failure

FEM51, FEM52, FEM54, FEM55, FEM58

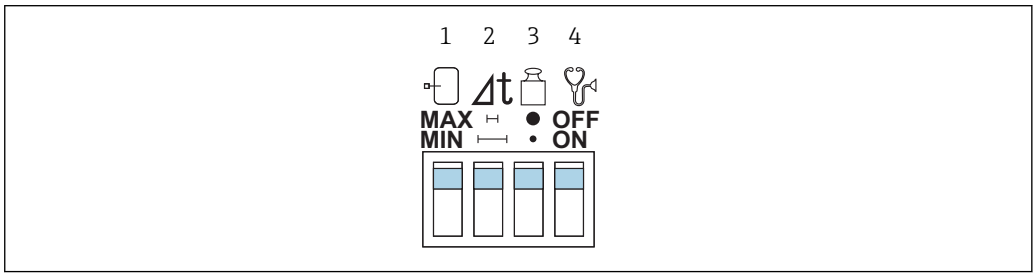

A0044551

2 As-delivered state

1 Switch for safety mode
2 Switch for switching delay
3 Switch for bulk density / density setting
4 Switch for diagnostics

Switch for safety mode

- MAX: overfill prevention
- MIN: dry running protection

Switch for switching delay

- ⊢
  - 0.5 s when covered
  - 150 °C (302 °F): 1.5 s when uncovered (short fork 1 s)
  - 230 to 280 °C (446 to 536 °F): 2 s when uncovered (short fork 1 s)
- ⊢——⊣: 5 s when covered, 5 s when uncovered

Switch for bulk density / density setting

- ●
  - 50 g/l (3.12 lbf/ft³): standard fork
  - 200 g/l (12.49 lbf/ft³): short fork (high bulk density)
- •
  - 10 g/l (0.62 lbf/ft³): standard fork
  - 50 g/l (3.12 lbf/ft³): short fork (high bulk density)

Switch for diagnostics

- OFF: diagnosis of abrasion and buildup switched off
- ON: diagnosis of abrasion and buildup switched on
  - In event of additional density setting to high bulk density: abrasion and buildup are only indicated per LED at the electronic insert
  - In event of additional density setting to low bulk density: signal on alarm is output if abrasion and buildup occurs

FEM57

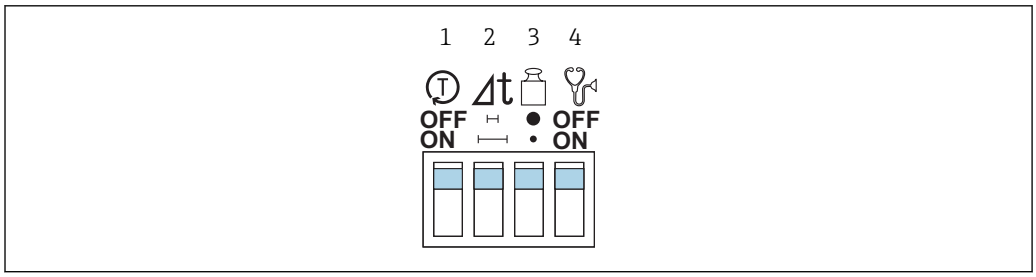

3 As-delivered state

1 Switch to switch the self-test on or off
2 Switch for switching delay
3 Switch for bulk density / density setting
4 Switch for diagnostics

Switch to switch the self-test on or off

- OFF: self-test is switched off
- ON: simultaneous switching delay of 0.5 s when covered, density setting for low bulk density and diagnostics on: self-test performed when voltage returns.

Switch for switching delay

- ⊢
  - 0.5 s when covered
  - 150 °C (302 °F): 1.5 s when uncovered (short fork 1 s)
  - 230 to 280 °C (446 to 536 °F): 2 s when uncovered (short fork 1 s)
- ⊢——⊣: 5 s when covered, 5 s when uncovered

Switch for bulk density / density setting

- ●
  - 50 g/l (3.12 lbf/ft³): standard fork
  - 200 g/l (12.49 lbf/ft³): short fork (high bulk density)
- •
  - 10 g/l (0.62 lbf/ft³): standard fork
  - 50 g/l (3.12 lbf/ft³): short fork (high bulk density)

Switch for diagnostics

- OFF: diagnosis of abrasion and buildup switched off
- ON: diagnosis of abrasion and buildup switched on
  - In event of additional density setting to high bulk density: abrasion and buildup are only indicated per LED at the electronic insert
  - In event of additional density setting to low bulk density: signal on alarm is output if abrasion and buildup occurs

Sediment detection

Detection of solids under water

Only sediment is detected. Water-like liquids or entrained substances are not detected.

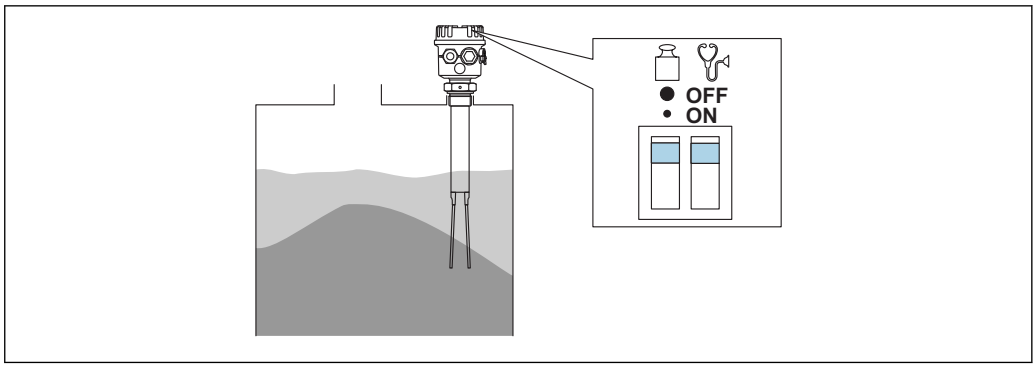

A0044514

Certificates and approvals

The certificates, approvals and other documentation currently available can be accessed as follows:
Endress+Hauser website: www.endress.com → Downloads.

CE mark

The measuring system meets the legal requirements of the applicable EU Directives. These are listed in the corresponding EU Declaration of Conformity along with the standards applied.

Endress+Hauser confirms successful testing of the device by affixing to it the CE mark.

RCM-Tick marking

The supplied product or measuring system meets the ACMA (Australian Communications and Media Authority) requirements for network integrity, interoperability, performance characteristics as well as health and safety regulations. Here, especially the regulatory arrangements for electromagnetic compatibility are met. The products are labelled with the RCM- Tick marking on the name plate.

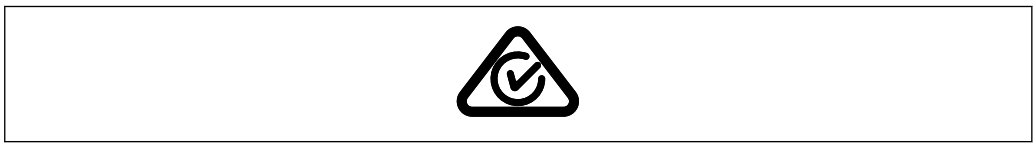

A0029561

Ex approval

For available Ex approvals, see Product Configurator.

All explosion protection data are listed in a separate document, which is available on request.

Functional safety

Use in safety systems with functional safety requirements up to SIL2 in accordance with IEC 61508.

CRN approval

CRN-approved devices are fitted with a separate plate bearing the Registration No.: 0F10907:5C ADD1.

ASME B 31.3

Design and materials in accordance with ASME B31.3. The welds are through-penetration welded and meet the requirements of the ASME Boiler and Pressure Vessel Code, Section IX and EN ISO 15614-1.

Process seal as per ANSI/ISA 12.27.01

North American practice for the installation of process seals. Soliphant M devices are designed by Endress+Hauser according to ANSI/ISA 12.27.01 as single seal devices with annunciation of failure. This allows the user to waive the use of – and save the cost of installing – an external secondary process seal in the protective conduit as required in ANSI/NFPA 70 (NEC) and CSA 22.1 (CEC). The devices comply with the North American installation practice and provide a very safe and cost-effective installation for pressurized applications with hazardous process media. Please refer to the Safety Instructions (XA) of the relevant device for further information.

Pressure Equipment Directive 2014/ 68/EU (PED)

Pressure equipment with allowable pressure ≤ 200 bar (2 900 psi)

Pressure equipment with allowable pressure ≤ 200 bar (2 900 psi)Pressure instruments with a flange and threaded boss that do not have a pressure-bearing housing do not fall within the scope of the Pressure Equipment Directive, irrespective of the maximum allowable pressure.

Reasons:

According to Article 2 (5) of EU Directive 2014/68/EU, pressure accessories are defined as:

"devices with an operational function and having pressure-bearing housings". If a pressure instrument does not have a pressure-bearing housing (no identifiable pressure chamber of its own), there is no pressure accessory present within the meaning of the Directive.

RoHS

The measuring system complies with the substance restrictions of the Restriction on Hazardous Substances Directive 2011/65/EU (RoHS 2).

EAC conformity

The measuring system meets the legal requirements of the applicable EAC guidelines. These are listed in the corresponding EAC Declaration of Conformity together with the standards applied.

Endress+Hauser confirms successful testing of the device by affixing to it the EAC mark.

Additional certification

- Material certificate as per EN 10204/3.1 for all wetted parts
- AD2000 on request
- TSE Certificate of Suitability. The following applies to wetted device components (FTM50/51):
  - They do not contain any materials derived from animals
  - No additives or operating materials derived from animals are used in production or processing

Other standards and guidelines

Low Voltage Directive (73/23/EEC)

IEC 61010
Safety requirements for electrical equipment for measurement, control, and laboratory use

EN 61326 series
EMC product family standard for electrical equipment for measurement, control and laboratory use

Ordering information

Detailed ordering information is available for your nearest sales organization www.addresses.endress.com or in the Product Configurator under www.endress.com :

1. Click Corporate
2. Select the country
3. Click Products
4. Select the product using the filters and search field
5. Open the product page

The Configuration button to the right of the product image opens the Product Configurator.

Product Configurator - the tool for individual product configuration
- Up-to-the-minute configuration data
- Depending on the device: Direct input of measuring point-specific information such as measuring range or operating language
- Automatic verification of exclusion criteria
- Automatic creation of the order code and its breakdown in PDF or Excel output format
- Ability to order directly in the Endress+Hauser Online Shop

Accessories

Device-specific accessories

Disassembly tool

Order number: 71026213

Protective cover for F13, F17 and F27 housing

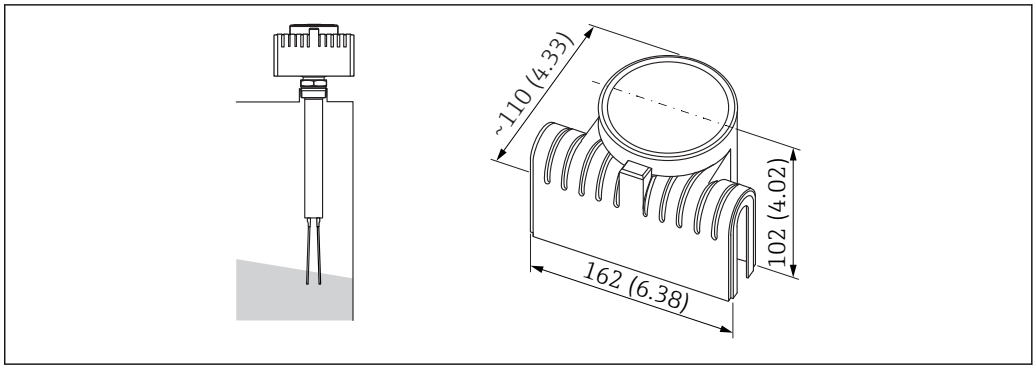

Unit of measurement mm (in)

- Order number: 71040497
- Material: PA

Supplementary documentation

For an overview of the scope of the associated Technical Documentation, refer to the following:
- *W@M Device Viewer* (www.endress.com/deviceviewer): Enter the serial number from nameplate
- *Endress+Hauser Operations App*: Enter the serial number from the nameplate or scan the 2D matrix code (QR code) on the nameplate

Operating Instructions (BA)

Your reference guide
These Operating Instructions contain all the information that is required in various phases of the life cycle of the device: from product identification, incoming acceptance and storage, to mounting, connection, operation and commissioning through to troubleshooting, maintenance and disposal.

Supplementary device-dependent documentation

Additional documents are supplied depending on the device version ordered: Always comply strictly with the instructions in the supplementary documentation. The supplementary documentation is an integral part of the device documentation.

Safety Instructions (XA)

Depending on the approval, the following Safety Instructions (XA) are supplied with the device. They are an integral part of the Operating Instructions.

The nameplate indicates the Safety Instructions (XA) that are relevant to the device.

71526952

www.addresses.endress.com

Endress+Hauser
People for Process Automation