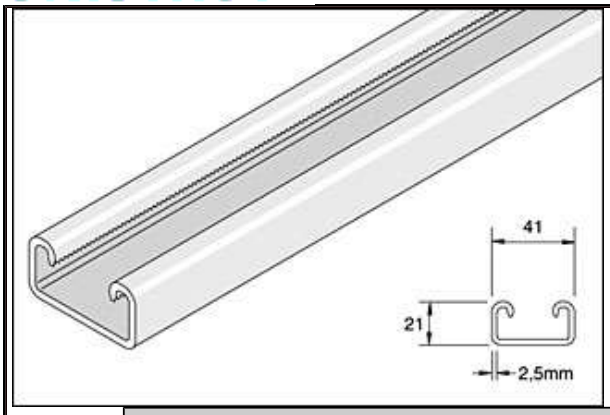

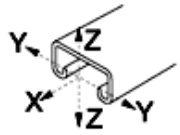

A (cm2)	/m (kg/m)	-
2.32	1.91	-
I y-y (cm4)	Z y-y (cm3)	r y-y (cm)
1.19	0.97	0.71
I z-z (cm4)	Z z-z (cm3)	r z-z (cm)
5.34	2.59	1.51

Load Data

L(mm)	σ=175 N/mm² F f Fmax(kN)	fmax(mm)	f=1/200L F (kN)	f=1/360L F (kN)	F(kN)	
250	5.425	0.45	-	-	10.222	
500	2.708	1.81	-	2.080	9.761	
750	1.085	4.07	1.658	0.922	8.427	
1000	1.354	7.24	0.932	0.520	6.769	
1250	1.079	11.32	0.598	0.324	5.376	
1500	0.903	16.30	0.412	0.226	4.287	*
1750	0.775	22.19	0.304	-	3.463	*
2000	0.677	28.99	0.226	-	-	

*kL/r>180

Part No.	Finish	Length	Weight
P3300X3	HG	3M	5.73
P3300X6	HG	6M	11.46
P3300X3	PG	3M	5.36
P3300X6	PG	6M	10.72
P3300X3	PO	3M	5.28
P3300X6	PO	6M	10.56
P3300X3	SS	3M	5.87
P3300X6	SS	6M	11.75

Project: A

Architect / Engineer: B

Date: C **Phone:** D

Contractor: E

Address: F

Notes 1: G

Approval Stamp: