MODEL: BU-P6738

BNC T-connector (Female, Female, Female)

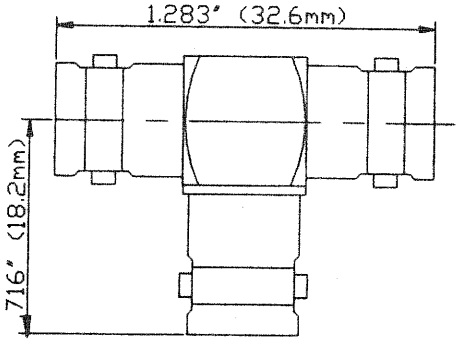

MATERIALS:
Body – Nickel Plated Brass
Contacts – Gold plated Beryllium Copper
Insulator – PTFE

RATING:
Temperature: -50°C to 150°C
Impedance: 75 Ohm