Y-bearings and Y-bearing units



® SKF is a registered trademark of the SKF Group.

© SKF Group 2013
The contents of this publication are the copyright of the publisher and may not be reproduced (even extracts) unless prior written permission is granted. Every care has been taken to ensure the accuracy of the information contained in this publication but no liability can be accepted for any loss or damage whether direct, indirect or consequential arising out of the use of the information contained herein.

PUB BU/P1 13728 EN · June 2013

This publication supersedes catalogue 06001 EN.

Principles of selection and application 15

Y-bearings 79

Y-bearing plummer block units 111

Flanged Y-bearing units 163

Y-bearing take-up units 235

SKF ConCentra ball bearings and units 247

SKF Food Line Y-bearing units 251

Product index 255

This is SKF

From one simple but inspired solution to a misalignment problem in a textile mill in Sweden, and fifteen employees in 1907, SKF has grown to become a global industrial knowledge leader. Over the years we have built on our expertise in bearings, extending it to seals, mechatronics, services and lubrication systems. Our knowledge network includes 46 000 employees, 15 000 distributor partners, offices in more than 130 countries, and a growing number of SKF Solution Factory sites around the world.



Research and development

We have hands-on experience in over 40 industries, based on our employees' knowledge of real life conditions. In addition our world-leading experts and university partners who pioneer advanced theoretical research and development in areas including tribology, condition monitoring, asset management and bearing life theory. Our ongoing commitment to



SKF Solution Factory makes SKF knowledge and manufacturing expertise available locally, to provide unique solutions and services to our customers.

research and development helps us keep our customers at the forefront of their industries.



Meeting the toughest challenges

Our network of knowledge and experience along with our understanding of how our core technologies can be combined helps us create innovative solutions that meet the toughest of challenges. We work closely with our customers throughout the asset life cycle, helping them to profitably and responsibly grow their businesses.

Working for a sustainable future

Since 2005, SKF has worked to reduce the negative environmental impact from our own operations and those of our suppliers. Our continuing technology development introduced the SKF BeyondZero portfolio of products and services which improve efficiency and reduce energy losses, as well as enable new technologies harnessing wind, solar and ocean power. This combined approach helps reduce the environmental impact both in our own operations and in our customers'.



Working with SKF IT and logistics systems and application experts, SKF Authorized Distributors deliver a valuable mix of product and application knowledge to customers worldwide.

SKF – the knowledge engineering company

Our knowledge – your success

SKF Life Cycle Management is how we combine our technology platforms and advanced services, and apply them at each stage of the asset life cycle, to help our customers to be more successful, sustainable and profitable.

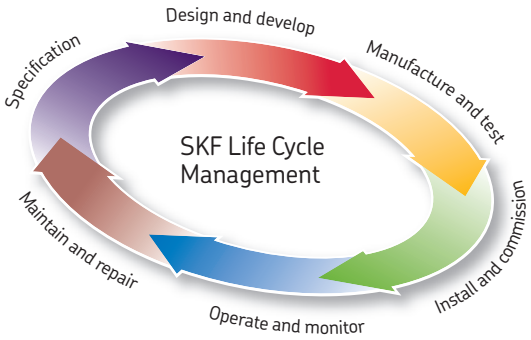

Working closely with you

Our objective is to help our customers improve productivity, minimize maintenance, achieve higher energy and resource efficiency, and optimize designs for long service life and reliability.

Innovative solutions

Whether the application is linear or rotary or a combination of the two, SKF engineers can work with you at each stage of the asset life cycle to improve machine performance by looking at the entire application. This approach doesn't just focus on individual components like bearings or seals. It looks at the whole application to see how each component interacts with the next.

Design optimization and verification

SKF can work with you to optimize current or new designs with proprietary 3-D modelling software that can also be used as a virtual test rig to confirm the integrity of the design.



Bearings
SKF is the world leader in the design, development and manufacture of high performance rolling bearings, plain bearings, bearing units and housings.



Machinery maintenance
Condition monitoring technologies and maintenance services from SKF can help minimize unplanned downtime, improve operational efficiency and reduce maintenance costs.



Sealing solutions
SKF offers standard seals and custom engineered sealing solutions to increase uptime, improve machine reliability, reduce friction and power losses, and extend lubricant life.



Mechatronics
SKF fly-by-wire systems for aircraft and drive-by-wire systems for off-road, agricultural and forklift applications replace heavy, grease or oil consuming mechanical and hydraulic systems.



Lubrication solutions
From specialized lubricants to state-of-the-art lubrication systems and lubrication management services, lubrication solutions from SKF can help to reduce lubrication related downtime and lubricant consumption.



Actuation and motion control
With a wide assortment of products – from actuators and ball screws to profile rail guides – SKF can work with you to solve your most pressing linear system challenges.

Contents

This is SKF **2**

SKF – the knowledge engineering company **4**

Foreword **11**

1 Principles of selection and application **15**
Designs 16
Bearing terminology 17
Y-bearings (insert bearings/wide inner ring bearings) 18
Y-bearing units (mounted ball bearing, unit ball) 19
Selection of Y-bearing unit type 24
Locating on the shaft 25
Loads 26
Seals 27
Permissible operating temperatures 28
Speeds 29
Application note 29
Selection of Y-bearing unit size 30
Load carrying ability and life 30
Selecting the bearing unit size using the life equations 30
Equivalent dynamic bearing load 32
Dynamic bearing loads 34
Requisite minimum load 34
Axial load carrying ability 34
Selecting the bearing unit size using the static load carrying capacity 35
Speeds 38
Design of Y-bearing arrangements 40
Axial displacement 40
Misalignment 42
Support surfaces 42
Attaching to the support surface 43
Shaft tolerances 43
Rubber seating rings 45
End covers 47
Lubrication and maintenance 48
Grease fills 48
Relubrication 48
Relubrication intervals 50

Mounting instructions 52
Mounting instructions – general 52
Mounting instructions for Y-bearing plummer block units
with a composite (Y-TECH) or cast housing and grub screws 56
with a cast housing and an eccentric locking collar 57
with a cast housing and an adapter sleeve 58
with a pressed steel housing and grub screws 60
with a pressed steel housing and an eccentric locking collar 62
Mounting instructions for Flanged Y-bearing units
with a composite (Y-TECH) or cast housing and grub screws 64
with a composite (Y-TECH) or cast housing and an eccentric locking collar 65
with a cast housing and an adapter sleeve 66
with a pressed steel housing and grub screws 68
with a pressed steel housing and an eccentric locking collar 70
Mounting instructions for Y-bearing take-up units
with a cast housing and grub screws 72
with a cast housing and an eccentric locking collar 73
Storing Y-bearings and Y-bearing units 74
Designation systems 75

2 Y-bearings 79
Product tables
2.1 Y-bearings with grub screws, metric shafts 92
Y-bearings with grub screws, inch shafts 94
2.2 Y-bearings with an eccentric locking collar, metric shafts 98
Y-bearings with an eccentric locking collar, inch shafts 100
2.3 Y-bearings with a tapered bore on an adapter sleeve, metric shafts 102
Y-bearings with a tapered bore on an adapter sleeve, inch shafts 104
2.4 Y-bearings with a standard inner ring, metric shafts 106
2.5 Y-bearings with a hexagonal bore, inch shafts 108

3 Y-bearing plummer block units 111
Product tables
3.1 Y-TECH plummer block units with grub screws, metric shafts 120
3.2 Y-bearing plummer block units with a cast housing and grub screws,
metric shafts 122
inch shafts 126
3.3 Y-bearing plummer block units with a cast housing and an eccentric locking collar,
metric shafts 134
inch shafts 136
3.4 Y-bearing plummer block units with a cast housing and an adapter sleeve,
metric shafts 142
inch shafts 144
3.5 Y-bearing plummer block units with a shortened cast housing and grub screws,
metric shafts 148
3.6 Y-bearing plummer block units with a shortened cast housing and an eccentric locking collar,
metric shafts 150
3.7 Y-bearing plummer block units with a pressed steel housing and grub screws
metric shafts 152
inch shafts 156

3.8 Y-bearing plummer block units with a pressed steel housing and an eccentric locking collar
metric shafts 158
inch shafts 160

4 Flanged Y-bearing units 163
Product tables
4.1 Flanged Y-TECH units with a housing with a square flange and grub screws,
metric shafts 174
4.2 Flanged Y-TECH units with a housing with an oval flange and grub screws,
metric shafts 176
4.3 Flanged Y-bearing units with a cast housing with a square flange and grub screws,
metric shafts 178
inch shafts 182
4.4 Flanged Y-bearing units with a cast housing with a square flange and an eccentric locking collar,
metric shafts 188
inch shafts 190
4.5 Flanged Y-bearing units with a cast housing with a square flange and an adapter sleeve,
metric shafts 194
inch shafts 196
4.6 Flanged Y-bearing units with a cast housing with an oval flange and grub screws,
metric shafts 200
inch shafts 202
4.7 Flanged Y-bearing units with a cast housing with an oval flange and an eccentric locking collar,
metric shafts 208
inch shafts 210
4.8 Flanged Y-bearing units with a cast housing with an oval flange and an adapter sleeve,
metric shafts 214
inch shafts 216
4.9 Flanged Y-bearing units with a cast housing with a round flange and grub screws,
metric shafts 218
4.10 Flanged Y-bearing units with a pressed steel housing and grub screws,
metric shafts 220
inch shafts 224
4.11 Flanged Y-bearing units with a pressed steel housing and an eccentric locking collar,
metric shafts 228
inch shafts 232

5 Y-bearing take-up units 235
Product tables
5.1 Y-bearing take-up units with a cast housing and grub screws,
metric shafts 238
inch shafts 240
5.2 Y-bearing take-up units with a cast housing and an eccentric locking collar,
metric shafts 244

6 SKF ConCentra ball bearings and units 247

7 SKF Food Line Y-bearing units 251

8 Product index 255

Foreword

This catalogue provides a representative overview of the range of Y-bearings and Y-bearing units available from SKF. The data in this catalogue is based on the latest standards and product upgrades. However, SKF reserves the right to make any changes necessary as a result of continuous improvement with respect to materials, design and manufacture.

This catalogue contains all the data relevant to Y-bearings and Y-bearing units. All the data required to select a Y-bearing or Y-bearing unit respectively are listed in the product tables. Descriptions of the Y-bearing and Y-bearing unit types including design features and other information precede each product section. General data regarding selecting a Y-bearing or Y-bearing unit type and size, speeds, bearing arrangement design, lubrication, mounting and designations are included in the catalogue too.

The catalogue is designed so that product information is easy to find and use. Each of the 8 chapters listed in the table of contents is clearly identified by a number and colour.

Unit conversions

Quantity	Unit	Conversion			
Length	inch	1 mm	0,03937 in	1 in	25,40 mm
	foot	1 m	3,281 ft	1 ft	0,3048 m
	yard	1 m	1,094 yd	1 yd	0,9144 m
	mile	1 km	0,6214 mile	1 mile	1,609 km
Area	square inch	1 mm^2	0,00155 sq.in	1 sq.in	645,16 mm^2
	square foot	1 m^2	10,76 sq.ft	1 sq.ft	0,0929 m^2
Volume	cubic inch	1 cm^3	0,061 cub.in	1 cub.in	16,387 cm^3
	cubic foot	1 m^3	35 cub.ft	1 cub.ft	0,02832 m^3
	imperial gallon	1 l	0,22 gallon	1 gallon	4,5461 l
	U.S. gallon	1 l	0,2642 U.S. gallon	1 U.S. gallon	3,7854 l
Velocity, speed	foot per second	1 m/s	3,28 ft/s	1 ft/s	0,30480 m/s
	mile per hour	1 km/h	0,6214 mile/h (mph)	1 mile/h (mph)	1,609 km/h
Mass	ounce	1 g	0,03527 oz	1 oz	28,350 g
	pound	1 kg	2,205 lb	1 lb	0,45359 kg
	short ton	1 tonne	1,1023 short ton	1 short ton	0,90719 tonne
	long ton	1 tonne	0,9842 long ton	1 long ton	1,0161 tonne
Density	pound per cubic inch	1 g/cm^3	0,0361 lb/cub.in	1 lb/cub.in	27,680 g/cm^3
Force	pound-force	1 N	0,225 lbf	1 lbf	4,4482 N
Pressure, stress	pounds per square inch	1 MPa	145 psi	1 psi	6,8948 × 10^3 Pa
Moment	inch pound-force	1 Nm	8,85 in.lbf	1 in.lbf	0,113 Nm
Power	foot-pound per second	1 W	0,7376 ft lbf/s	1 ft lbf/s	1,3558 W
	horsepower	1 kW	1,36 HP	1 HP	0,736 kW
Temperature	degree	Celsius	$t_C = 0,555\ (t_F - 32)$	Fahrenheit	$t_F = 1,8\ t_C + 32$

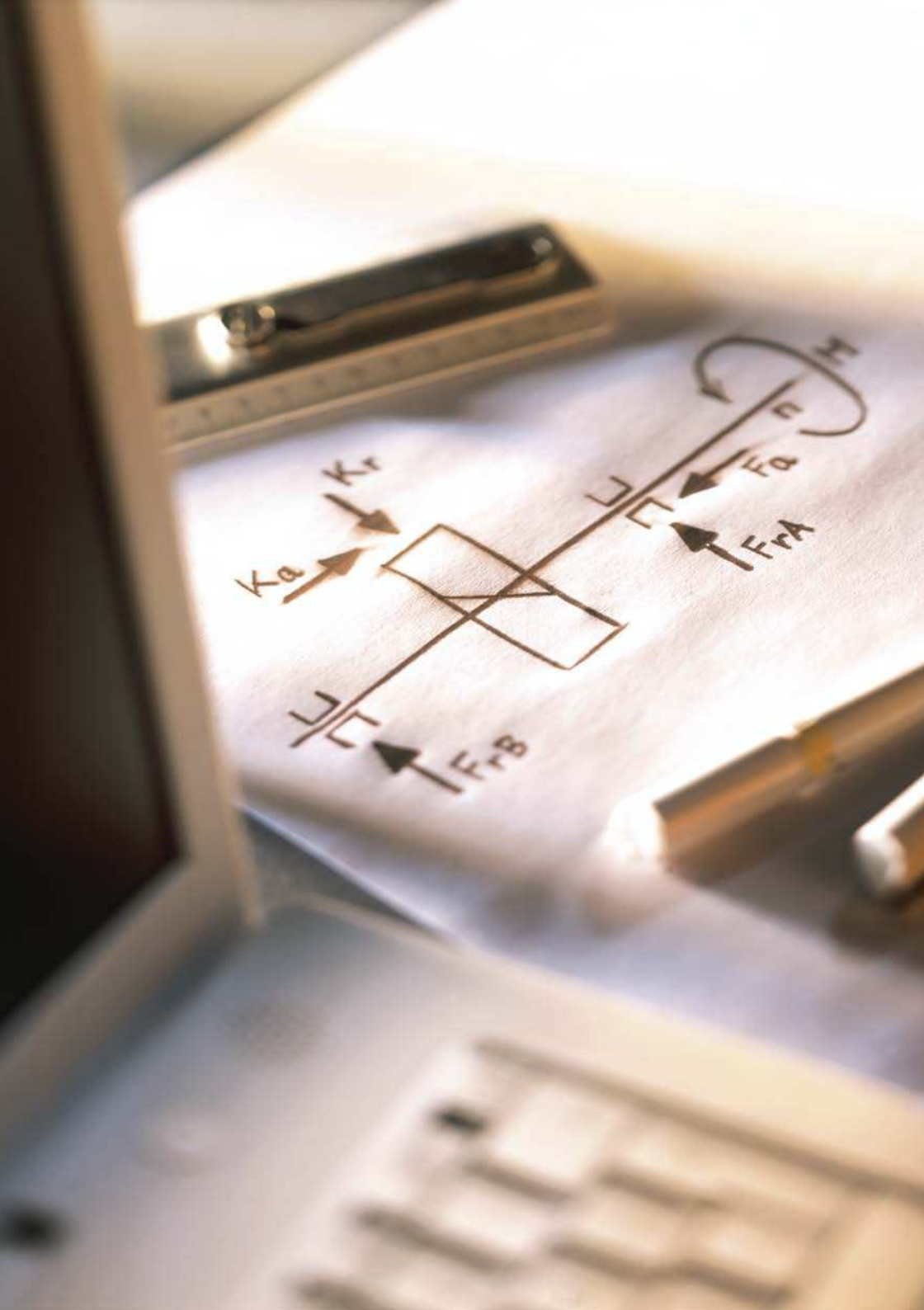
Kr
Ka
Fa
FrA
FrB

Principles of selection and application

Designs **16**

Selection of Y-bearing unit type **24**

Selection of Y-bearing unit size **30**

Speeds **38**

Design of Y-bearing arrangements **40**

Lubrication and maintenance **48**

Mounting instructions **52**
Mounting instructions for Y-bearing plummer block units
with a composite (Y-TECH) or cast housing and grub screws 56
with a cast housing and an eccentric locking collar 57
with a cast housing and an adapter sleeve 58
with a pressed steel housing and grub screws 60
with a pressed steel housing and an eccentric locking collar 62
Mounting instructions for flanged Y-bearing units
with a composite (Y-TECH) or cast housing and grub screws 64
with a composite (Y-TECH) or cast housing and an eccentric locking collar 65
with a cast housing and an adapter sleeve 66
with a pressed steel housing and grub screws 68
with a pressed steel housing and an eccentric locking collar 70
Mounting instructions for Y-bearing take-up units
with a cast housing and grub screws 72
with a cast housing and an eccentric locking collar 73

Storing Y-bearings and Y-bearing units **74**

Designation systems **75**

Designs

Conventional SKF ball bearing units are referred to as Y-bearing units. These units consist of:

- an insert bearing (a single row deep groove ball bearing) with a convex sphered outside diameter
- a housing, which has a correspondingly sphered but concave bore

Y-bearing units can accommodate moderate initial misalignment, but normally do not permit axial displacement. They are ready-to-mount, ready-to-use units (→ **fig. 1**) and available as:

- Y-bearing plummer block units
- Flanged Y-bearing units
- Y-bearing take-up units

The housings are available in:

- composite material (→ **fig. 2**)
- grey cast iron (→ **fig. 3**)
- sheet steel (→ **fig. 4**)

SKF Y-bearing units provide designers with considerable freedom of choice so that compromises can be avoided. Numerous standard series Y-bearing units are available (→ tables on pages **20** to **23**). The tables list Y-bearings and Y-bearing housings and their possible combinations to units. For information about more specialized Y-bearing units, refer to the sections, *SKF Con-Centra ball bearings and units* and *SKF Food Line Y-bearing units* starting on **page 247**.

Fig. 1



Fig. 2



Because of their versatility and cost effectiveness, Y-bearing units are typically found in the following applications: agricultural machinery, construction equipment, conveyor systems, textile machines and fans as well as in machines for food and beverage processing and packaging.

Bearing terminology

For a better understanding of the information in this catalog, see the next two pages for frequently used bearing terms and their definitions for the following products:

- Y-bearings
- Y-bearing plummer block units
- Flanged Y-bearing units
- Y-bearing take-up units

Essentially, these terms are in accordance with those in the following ISO standards:

- ISO 3228:1993 *Rolling bearings – Cast and pressed housings for insert bearings*
- ISO 9628:2006 *Rolling bearings – Insert bearings and eccentric locking collars*

A detailed collection of bearing specific terms and definitions are also listed in ISO 5593:1997 *Rolling bearings – Vocabulary*.

Fig. 3



Fig. 4



Y-bearings

Insert bearings, wide inner ring bearings
(→ **fig. 5**)

1 Outer ring
2 Sphered outer surface
3 Lubrication hole
4 Inner ring
5 Bore
6 Cage
7 Ball
8 Integral seal
9 Flinger
10 Eccentric locking collar
11 Grub (set) screw

Fig. 5

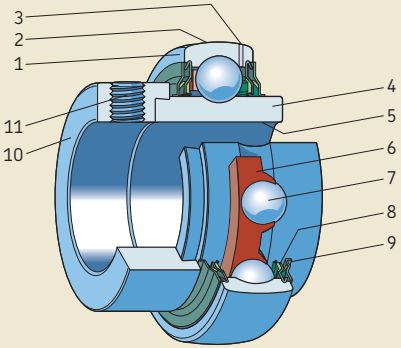

Inner ring with an eccentric locking collar

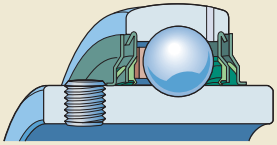

Inner ring with two grub screws

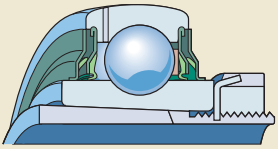

Inner ring with a tapered bore
(on an adapter sleeve)

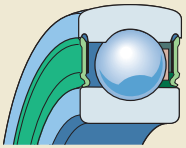

Inner ring of a standard deep
groove ball bearing

Fig. 6

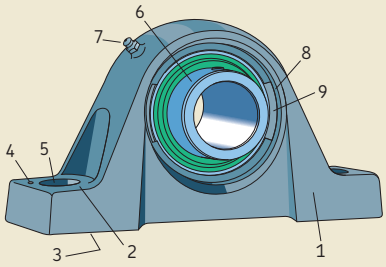

a

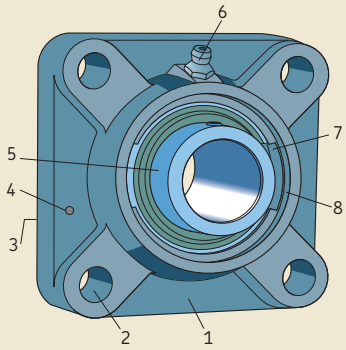

b

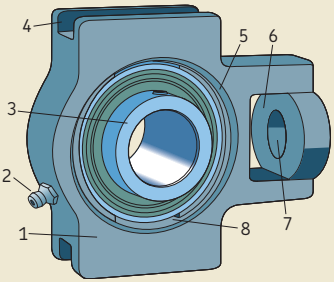

c

Y-bearing units

Mounted ball bearing, unit ball

Y-bearing plummer (pillow) block unit (→ fig. 6a)

1 Y-bearing plummer block housing of grey cast iron
2 Housing base
3 Housing support face
4 Cast dimple for dowel pin
5 Attachment bolt hole
6 Y-bearing
7 Grease fitting
8 Recess for end cover
9 Filling slot for Y-bearing

Flanged Y-bearing unit (→ fig. 6b)

1 Square flanged housing of grey cast iron
2 Attachment bolt hole
3 Back of flanged housing with or without centring recess
4 Cast dimple for dowel pin
5 Y-bearing
6 Grease fitting
7 Filling slot for Y-bearing
8 Recess for end cover

Y-bearing take-up unit (→ fig. 6c)

1 Take-up housing of grey cast iron
2 Grease fitting
3 Y-bearing
4 Piloting groove
5 Recess for end cover
6 Receiving opening for adjustment screw location
7 Centre bore for adjustment screw
8 Filling slot for Y-bearing

Designs

Y-bearing unit	Composite housings			Cast housings		
						
Y-bearings	**SYK 5(00)**	**FYK 5(00)**	**FYTBK 5(00)**	**SY (500)**	**SYJ 5(00)**	**SYH 5(00)**
YAR 2-2F 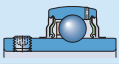	**SYK .. TF** 20–40 mm	**FYK .. TF** 20–40 mm 3/4–1 1/2 in.[1]	**FYTBK .. TF** 20–35 mm 3/4–1 1/4 in.[1]	**SY .. TF** 12–65 mm 1/2–2 15/16 in.	**SYJ .. TF** 20–100 mm 3/4–2 1/2 in.	**SYH .. TF** 1/2–2 7/16 in.
YAR 2-2RF 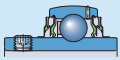	**SYK .. TR** 20–40 mm	**FYK .. TR** 20–40 mm 3/4–1 1/2 in.[1]	**FYTBK .. TR** 20–35 mm 3/4–1 1/4 in.[1]	**SY .. TR** 20–60 mm 3/4–2 1/2 in.[1]	20–65 mm[1] 3/4–2 1/2 in.[1]	–
YAR 2-2RF/HV 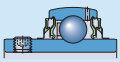	20–40 mm[1] 3/4–1 1/2 in.[1]	20–40 mm[1] 3/4–1 1/2 in.[1]	20–35 mm[1] 3/4–1 7/16 in.[1]	20–50 mm 3/4–1 15/16 in.	20–50 mm 3/4–1 15/16 in.	–
YAR 2-2RF/ VE495 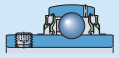	20–40 mm[1]	20–40 mm[1]	20–35 mm[1]	20–50 mm	20–50 mm	–
YAT 2 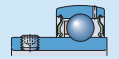	20–40 mm[1]	20–40 mm[1]	20–35 mm[1]	17–50 mm[1]	20–50 mm[1]	–
YEL 2-2F 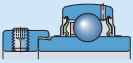	20–40 mm[1]	20–40 mm[1]	20–35 mm[1]	**SY .. WF** 20–60 mm 1 7/16–1 15/16 in.	20–60 mm[1]	**SYH .. WF** 3/4–2 7/16 in.
YEL 2-2RF/ VL065 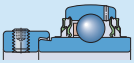	20–40 mm[1]	20–40 mm[1]	20–35 mm[1]	20–40 mm[1]	20–40 mm[1]	–
YET 2 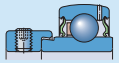	20–40 mm[1]	20–40 mm[1] 3/4–1 1/2 in.[1]	20–35 mm[1] 3/4–1 7/16 in.[1]	**SY .. FM** 15–60 mm 3/4–1 1/2 in.[1]	20–60 mm[1] 3/4–1 1/2 in.[1]	**SYH .. FM** 1–2 in.
YSA 2-2FK on adapter sleeve 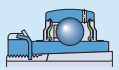	20–35 mm[1] 3/4–1 1/4 in.[1]	20–35 mm[1] 3/4–1 1/4 in.[1]	20–30 mm[1] 3/4–1 3/16 in.[1]	20–60 mm[1] 3/4–2 3/8 in.[1]	**SYJ .. KF** 20–60 mm 3/4–2 3/8 in.[1]	–
17262(00) 	20–40 mm[1]	20–40 mm[1]	20–35 mm[1]	17–60 mm[1]	20–60 mm[1]	–

[1] Parts must be ordered separately.

Y-bearing unit	Cast housings				
					
Y-bearings	**SYM 5(00)**	**SYF 5(00)**	**SYFJ 5(00)**	**FY (500)**	**FYJ 5(00)**
YAR 2-2F 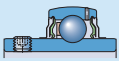	**SYM .. TF** 1 7/16–3 in.	**SYF .. TF** 20–50 mm 3/4–1 3/4 in.[1]	**SYFJ .. TF** 20–50 mm 3/4–1 3/4 in.[1]	**FY .. TF** 12–65 mm 1/2–2 7/16 in.	**FYJ .. TF** 20–100 mm 3/4–2 1/2 in.[1]
YAR 2-2RF 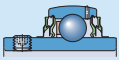	–	20–50 mm[1] 3/4–1 3/4 in.[1]	20–50 mm[1] 3/4–1 3/4 in.[1]	**FY .. TR** 20–60 mm 3/4–2 1/2 in.[1]	20–60 mm[1] 3/4–2 1/2 in.[1]
YAR 2-2RF/HV 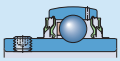	–	20–50 mm 3/4–1 15/16 in.	20–50 mm 3/4–1 15/16 in.	20–50 mm 3/4–1 15/16 in.	20–50 mm 3/4–1 15/16 in.
YAR 2-2RF/ VE495 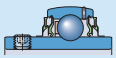	–	20–50 mm	20–50 mm	20–50 mm	20–50 mm
YAT 2 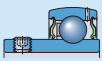	–	20–50 mm[1]	20–50 mm[1]	17–50 mm[1]	20–50 mm[1]
YEL 2-2F 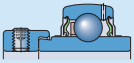	–	20–50 mm[1]	20–50 mm[1]	**FY .. WF** 20–60 mm 1–2 7/16 in.	20–50 mm[1]
YEL 2-2RF/ VL065 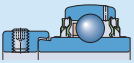	–	20–40 mm[1]	20–40 mm[1]	20–40 mm[1]	20–40 mm[1]
YET 2 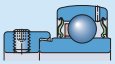	–	**SYF .. FM** 20–50 mm 3/4–1 1/2 in.[1]	**SYFJ .. FM** 20–50 mm 3/4–1 1/2 in.[1]	**FY .. FM** 15–60 mm 3/4–2 3/16 in.[1]	20–60 mm[1] 3/4–1 1/2 in.[1]
YSA 2-2FK on adapter sleeve 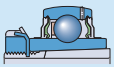	–	20–45 mm[1] 3/4–1 3/4 in.[1]	12–45 mm[1] 3/4–1 3/4 in.[1]	20–60 mm[1] 3/4–2 3/8 in.[1]	**FYJ .. KF** 20–60 mm 3/4–2 3/8 in.[1]
17262(00) 	–	20–50 mm[1]	20–50 mm[1]	17–60 mm[1]	20–60 mm[1]

[1] Parts must be ordered separately.

Designs

Y-bearing flanged unit	Cast housings				
					
Y-bearings	**FYM 5(00)**	**FYT 5(00)**	**FYTB 5(00)**	**FYTJ (500)**	**FYC 5(00)**
YAR 2-2F 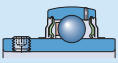	**FYM .. TF** 1 7/16–3 in.	**FYT .. TF** 1/2–2 3/16 in.	**FYTB .. TF** 12–50 mm 3/4–1 3/4 in.	**FYTJ .. TF** 20–50 mm 3/4–1 3/4 in.	**FYC .. TF** 20–65 mm 3/4–2 1/2 in.[1]
YAR 2-2RF 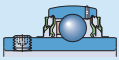	–	–	**FYTB .. TR** 20–50 mm 3/4–1 3/4 in.[1]	20–50 mm[1] 3/4–1 3/4 in.[1]	20–65 mm[1] 3/4–2 1/2 in.[1]
YAR 2-2RF/HV 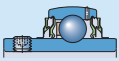	–	–	20–50 mm 3/4–1 15/16 in.	20–50 mm 3/4–1 15/16 in.	20–50 mm 3/4–1 15/16 in.
YAR 2-2RF/ VE495 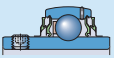	–	–	20–50 mm	20–50 mm	20–50 mm
YAT 2 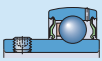	–	**FYT .. RM** 1/2–2 3/16 in.	17–50 mm[1]	20–50 mm[1]	20–50 mm[1]
YEL 2-2F 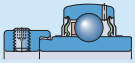	–	–	**FYTB .. WF** 20–50 mm	20–50 mm[1]	20–60 mm[1]
YEL 2-2RF/ VL065 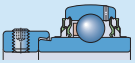	–	–	20–40 mm[1]	20–40 mm[1]	20–40 mm[1]
YET 2 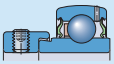	–	**FYT .. FM** 1/2–2 3/16 in.	**FYTB .. FM** 15–50 mm 3/4–1 1/2 in.[1]	20–50 mm[1] 3/4–1 1/2 in.[1]	20–40 mm[1] 3/4–1 1/2 in.[1]
YSA 2-2FK on adapter sleeve 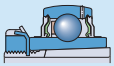	–	–	20–45 mm[1] 3/4–1 3/4 in.[1]	**FYTJ .. KF** 20–45 mm 3/4–1 3/4 in.	20–60 mm[1] 3/4–2 3/8 in.[1]
17262(00) 	–	–	17–50 mm[1]	20–50 mm[1]	20–60 mm[1]

[1] Parts must be ordered separately.

Y-bearing unit	Cast housings		Pressed steel housings			
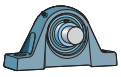						
Y-bearings	**TU 5(00)**	**TUJ 5(00)**	**P 40 – P 85**	**PF 40 – 90**	**PFD 40 – 80**	**PFT 40 – 80**
YAR 2-2F 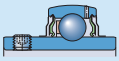	**TU .. TF** 20–55 mm 3/4–2 3/16 in.	**TUJ .. TF** 20–60 mm 3/4–2 in.[1]	12–45 mm[1] 1/2–1 3/4 in.[1]	12–50 mm[1] 3/4–1 3/4 in.[1]	12–40 mm[1] 3/4–1 1/2 in.[1]	12–40 mm[1] 3/4–1 1/2 in.[1]
YAR 2-2RF 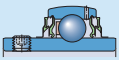	20–55 mm[1] 3/4–2 in.[1]	20–60 mm[1] 3/4–2 in.[1]	12–45 mm[1] 3/4–1 3/4 in.[1]	20–35 mm[1] 3/4–1 3/4 in.[1]	20–40 mm[1] 3/4–1 1/2 in.[1]	20–40 mm[1] 3/4–1 1/2 in.[1]
YAR 2-2RF/HV 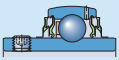	20–50 mm 3/4–1 15/16 in.	20–50 mm 3/4–1 15/16 in.	20–40 mm[1] 3/4–1 1/2 in.[1]	20–40 mm[1] 3/4–1 1/2 in.[1]	20–40 mm[1] 3/4–1 1/2 in.[1]	20–40 mm[1] 3/4–1 1/2 in.[1]
YAR 2-2RF/ VE495 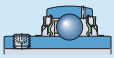	20–50 mm	20–50 mm	20–40 mm[1]	20–40 mm[1]	20–40 mm[1]	20–40 mm[1]
YAT 2 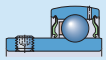	20–50 mm[1]	20–50 mm[1]	17–45 mm[1] 5/8–1 3/4 in.[1]	17–50 mm[1] 5/8–1 15/16 in.[1]	17–40 mm[1] 5/8–1 1/2 in.[1]	17–40 mm[1] 5/8–1 1/2 in.[1]
YEL 2-2F 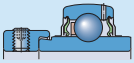	20–55 mm[1]	20–60 mm[1]	12–45 mm[1] 1/2–1 3/4 in.[1]	20–50 mm[1] 1/2–1 15/16 in.[1]	20–40 mm[1] 1/2–1 1/2 in.[1]	20–40 mm[1] 1/2–1 1/2 in.[1]
YEL 2-2RF/ VL065 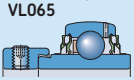	20–40 mm[1]	20–40 mm[1]	20–40 mm[1]	20–40 mm[1]	20–40 mm[1]	20–40 mm[1]
YET 2 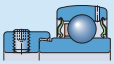	**TU .. FM** 20–55 mm 3/4–1 1/2 in.[1]	20–60 mm[1] 3/4–1 1/2 in.[1]	15–45 mm[1] 1/2–1 3/4 in.[1]	15–50 mm[1] 3/4–1 3/4 in.[1]	15–40 mm[1] 3/4–1 1/2 in.[1]	15–40 mm[1] 3/4–1 1/2 in.[1]
YSA 2-2FK on adapter sleeve 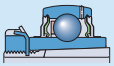	20–50 mm[1] 3/4–2 in.[1]	20–55 mm[1] 3/4–2 1/8 in.[1]	20–40 mm[1] 3/4–1 3/4 in.[1]	20–45 mm[1] 3/4–1 3/4 in.[1]	20–35 mm[1] 3/4–1 1/4 in.[1]	20–35 mm[1] 3/4–1 3/4 in.[1]
17262(00) 	20–55 mm[1]	20–60 mm[1]	17–45 mm[1]	17–50 mm[1]	17–40 mm[1]	17–40 mm[1]

[1] Parts must be ordered separately.

Selection of Y-bearing unit type

The SKF Y-bearing unit assortment is extensive. It includes three designs with a choice of three different materials for the housing and a variety of Y-bearings that can be locked onto the shaft in very different ways. Because of their design, each Y-bearing unit exhibits characteristic features that make it more or less suitable for a specific application.

For example, Y-bearing units with a pressed steel housing are not capable of supporting heavy loads, can only run at moderate speeds and can not be relubricated. However, they are economical and easy to mount. On the other hand, housings made of grey cast iron can withstand significantly heavier radial, axial and shock loads. In addition, cast housings have a grease fitting for relubrication, making them a good choice for applications with somewhat higher speeds.

Since, in many cases, several factors have to be considered when selecting a suitable Y-bearing unit, there is no way to provide a list of general rules. However, important factors that should be considered include:

- location on the shaft
- loads
- seals
- permissible operating temperatures
- speeds

Keep in mind that the total cost of a bearing arrangement and inventory considerations could also influence the final choice.

Other important criteria for designing a bearing arrangement, such as load carrying capacity and rating life, lubrication, etc., will be dealt with in detail in the corresponding chapters.

Fig. 1

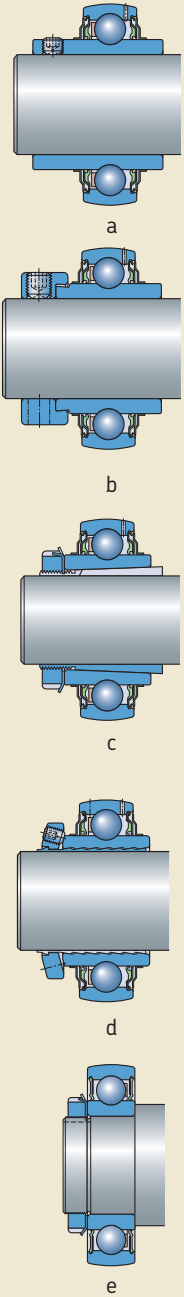

Locating on the shaft

There is a choice of five different methods (→ **fig. 1**) by which an SKF Y-bearing unit can be located onto the shaft:

- Grub screws (**a**). This method enables very easy mounting and dismounting, even if space is limited. This locking method is typically used in applications where the shaft alternates direction of rotation.
- Eccentric locking collar (**b**). This locking method is typically used for applications where the shaft rotates in one direction only. It can be used for alternating directions when loads and speeds are low.
- Adapter sleeve locking (**c**). This method enables a concentric locking of the Y-bearing unit on the shaft and is appropriate for alternating as well as constant direction of rotation.
- SKF ConCentra locking (**d**). This method enables true concentric locking on the shaft. It is appropriate for alternating, as well as constant direction of rotation. For additional information about SKF ConCentra ball bearings and units refer to the dedicated chapter on **page 247**.
- Interference fit (**e**). The use of an interference fit is only available for Y-bearings in the 17262(00)-2RS1 and 17263(00)-2RS1 series. These bearings and the required housings have to be ordered separately.

Loads

The magnitude of the load is the factor that usually determines the size of the Y-bearing unit to be used. Generally, units with housings made from grey cast iron or composite material can withstand heavier loads than units with pressed sheet steel housings. Magnitude of load is defined as:

- $P \leq 0{,}02\ C$ – very light load
- $0{,}02\ C < P \leq 0{,}035\ C$ – light load
- $0{,}035\ C < P \leq 0{,}05\ C$ – moderate load
- $0{,}05\ C < P \leq 0{,}1\ C$ – normal load
- $P > 0{,}1\ C$ – heavy load

Radial loads

In applications where normal to heavy loads occur, only Y-bearing units with housings made from grey cast iron or composite material should be used. These units are able to withstand the same dynamic and static loads as their insert bearings and are less sensitive to shock loads (→ **fig. 2a**).

Y-bearing units with a pressed steel housing are designed to withstand light to moderate loads and are not able to accommodate shock loads (→ **fig. 2b**).

Axial loads

The axial load carrying capacity of a Y-bearing depends not as much on its internal design as on the way it is locked onto the shaft (→ **fig. 2c**) as described in the chapter *Axial load carrying ability*, **page 34**. In general, Y-bearing units with housings made from grey cast iron or composite material are more suitable for heavier or alternating axial loads.

Y-bearing units with a pressed sheet steel housing are only intended for light axial loads, in particular the plummer block units incorporating a rubber seating ring (→ **fig. 2d**).

Fig. 2

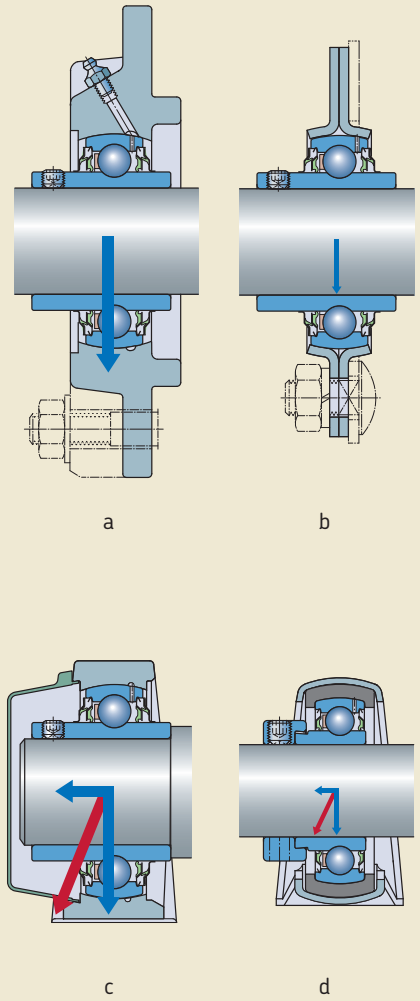

Fig. 3

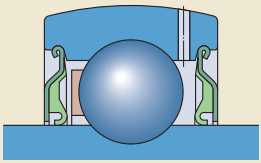

a

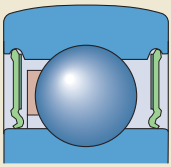

b

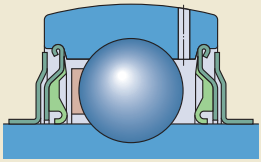

c

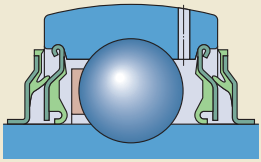

d

Seals

The factors that influence the choice of the most appropriate sealing method include:

- the peripheral speed at the sealing counterface
- the friction in the seal and the resulting temperature increase
- the operating environment, e.g. moisture, dust or coarse contaminants
- the requirements regarding efficiency

The standard integral seal used in SKF Y-bearing units provides good protection against moisture and contaminants and also provides reliable retention of the lubricant (→ **fig. 3a**). The same applies to RS1 contact seals that are integral to Y-bearings with a normal inner ring in the 17262(00)-2RS1 and 17263(00)-2RS1 series (→ **fig. 3b**).

For more contaminated conditions, Y-bearing units fitted with plain steel flingers outside the integral seal should be used (→ **fig. 3c**). The flingers have an interference fit on the inner ring and considerably enhance the sealing effect without increasing friction.

Where operating conditions are extremely contaminated and long service life is required, Y-bearing units with the highly efficient multiple seal are recommended. Here, the sealing efficiency of the standard integral seal is reinforced by a steel flinger with a vulcanized sealing lip (→ **fig. 3d**).

Permissible operating temperatures

The permissible operating temperatures for a Y-bearing unit are determined primarily by the bearing, the cage material, the seal material(s) and the grease with which it is lubricated.

The temperature ranges for the greases are:

- –30 to +120 °C for all standard Y-bearings and Y-bearing units that are filled with a grease that has a lithium-calcium thickener[1)]
- –45 to +150 °C for HV and VE495 Y-bearing variants that are filled with a food-grade grease[2)]
- –20 to +140 °C for Y-bearings with a hexagonal bore in the YHB 2 and YHC 2 series that are filled with a grease that has a lithium-complex soap thickener[3)] (designation suffix VT357)
- 40 to 55 °C for maintenance-free operation at moderate loads (P ≤ 0,05 C) and speeds

All standard Y-bearings are fitted with an injection moulded snap-type cage of glass fibre reinforced polyamide 6,6. These cages exhibit excellent performance characteristics in a variety of applications where operating temperatures do not exceed 120 °C.

Contact seals can be used at operating temperatures between –30 and +100 °C. Temperatures up to 120 °C are also possible for brief periods.

1) The temperature range for reliable operation in accordance with the "SKF traffic light concept" is between 10 and 120 °C.
2) The temperature range for reliable operation in accordance with the "SKF traffic light concept" is between 20 and 150 °C.
3) The temperature range for reliable operation in accordance with the "SKF traffic light concept" is between 50 and 140 °C.

Speeds

The speed at which a Y-bearing or a Y-bearing unit can operate depends mainly on:

- the method used to attach it to the shaft
- the sealing arrangement

For Y-bearings that are locked onto a shaft with grub screws or an eccentric locking collar, the permissible speed of the bearing is determined by its fit on the shaft. The looser the fit, the lower the speed.

If a Y-bearing is mounted on an adapter sleeve, with an interference fit (bearings in the 17262(00) or 17263(00) series), or with SKF ConCentra locking, the permissible speed is much higher than if another locating method is used. Their concentric fit also provides a low vibration level and quiet running (→ chapter *Speeds*, starting on **page 38**).

Because of the relubrication requirements in applications with relatively high speeds (→ chapter *Lubrication and maintenance*, starting on **page 48**), SKF recommends using Y-bearing units that can be relubricated.

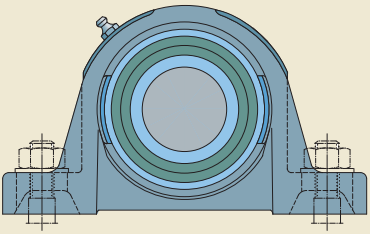

Application note

Because of their special properties, SKF Y-bearing units are used in applications in virtually every industry. If however, they are to be used in an application where health, safety, or the environment is at risk, the SKF application engineering service should be contacted during the design phase.

This is also true for applications with relatively high speeds and where machine downtime can cause significant problems.



Selection of Y-bearing unit size

Load carrying ability and life

The size of a Y-bearing or Y-bearing unit required for a specific arrangement is determined by the loads that will occur in the application and the required life needed for the application. Variables known as load ratings are used in bearing calculations as a measure of the load carrying ability: the basic dynamic load rating C and the basic static load rating C_0. The basic dynamic load rating is based on specifications determined in ISO 281:2007 while the basic static load rating is based on specifications determined in ISO 76:2006.

Selecting the bearing unit size using life equations

To select a Y-bearing or a Y-bearing unit size, the basic rating life is typically calculated in accordance with ISO 281:2007. The equation for ball bearings is

$$L_{10} = \left(\frac{C}{P}\right)^3$$

If speed is constant, the basic rating life expressed in operating hours can be obtained using

$$L_{10h} = \frac{1\,000\,000}{60\,n} \left(\frac{C}{P}\right)^3$$

or

$$L_{10h} = \frac{1\,000\,000}{60\,n} L_{10}$$

where
L_{10} = basic rating life (at 90% reliability), millions of revolutions
L_{10h} = basic rating life (at 90% reliability), operating hours
C = basic dynamic load rating, kN
P = equivalent dynamic bearing load, kN
n = rotational speed, r/min

This method is usually adequate for selecting the size of Y-bearings or Y-bearing units, as it is based on experience. If reference experience regarding requisite life and operational reliability is not available, the values provided in **table 1** for the basic rating life L_{10h} can be used as guidelines.

To fully exploit the life of a Y-bearing or a Y-bearing unit, the modified life equation in accordance with ISO 281:2007 should be used to calculate the SKF rating life.

SKF rating life

In the SKF rating life equation, the stresses resulting from external loads are considered, together with the stresses caused by the surface topography, lubrication and kinematics of the rolling contact surfaces. Taking the influence of this combined stress system into account provides a better prediction of the actual performance of the Y-bearing or Y-bearing unit in a particular application.

For additional information about the SKF rating life and its calculation refer to the:

- SKF *General Catalogue*
- *SKF Interactive Engineering Catalogue* available online at www.skf.com

The SKF Interactive Engineering Catalogue allows different bearing lives to be calculated online.

Table 1

Guideline values of requisite basic rating life L_{10h} for Y-bearings and Y-bearing units

Type of machine	Requisite basic rating life L_{10h} operating hours
Machines used for short periods or intermittently	
Agricultural and ancillary transport equipment	1 000 to 2 000
Other agricultural equipment	4 000 to 8 000
Machines used 8 hours per day but not always fully utilized	
Belt conveyors	12 000 to 20 000
Machines used 8 hours per day and fully utilized	
Light duty fans, textile machinery	20 000 to 30 000

Equivalent dynamic bearing load

The equivalent dynamic bearing load is defined as that hypothetical radial load, constant in magnitude and direction, which, if applied, would have the same influence on bearing life as the actual load to which the bearing is subjected (→ **fig. 1**).

If the bearing load F is constant in magnitude and direction and acts radially, then P = F and the load can be inserted directly into the life equation. In all other cases, the equivalent dynamic bearing load must be calculated.

Fig. 1

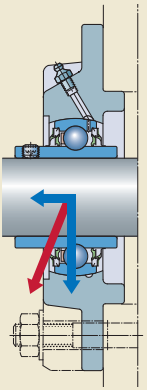

Constant bearing load

Y-bearings and Y-bearing units are often subjected to simultaneously acting radial and axial loads. If the resultant load is constant in magnitude and direction, the equivalent dynamic bearing load P can be obtained from the general equations

$P = F_r$ when $F_a/F_r \leq e$
$P = X F_r + Y F_a$ when $F_a/F_r > e$

where
P = equivalent dynamic bearing load, kN
F_r = actual radial bearing load, kN
F_a = actual axial bearing load, kN
X = radial load factor for the bearing
Y = axial load factor for the bearing
e = limiting value for F_a/F_r

and with reference to **tables 2** and **3**
C_0 = basic static load rating, kN
f_0 = bearing-dependent calculation factor

The limiting value e and the load factors X and Y required to calculate the equivalent bearing load for Y-bearings and Y-bearing units can be found in **table 2**. As for deep groove ball bearings, it depends on the value of the relative thrust load $f_0 F_a/C_0$.

Table 2

Calculation factors

Relative thrust load $f_0 F_a/C_0$	Y-bearing series YAT, YAR, YET, YEL, YSA, YSP e	X	Y	17262(00), 17263(00) e	X	Y
0,172	0,29	0,46	1,88	0,19	0,56	2,30
0,345	0,32	0,46	1,71	0,22	0,56	1,99
0,689	0,36	0,46	1,52	0,26	0,56	1,71
1,03	0,38	0,46	1,41	0,28	0,56	1,55
1,38	0,40	0,46	1,34	0,30	0,56	1,45
2,07	0,44	0,46	1,23	0,34	0,56	1,31
3,45	0,49	0,46	1,10	0,38	0,56	1,15
5,17	0,54	0,46	1,01	0,42	0,56	1,04
6,89	0,54	0,46	1,00	0,44	0,56	1,00

Table 3

Calculation factor f_0

Y-bearing series (sizes)	Factor f_0
YAT, YAR, YET, YEL, YSA, YSP	
203 – 204	13
205 – 212	14
213 – 218	15
220	14
17262(00)	
03 – 04	13
05 – 12	14
17263(00)	
05	12
06 – 10	13

Diagram 1

Mean load within a duty interval

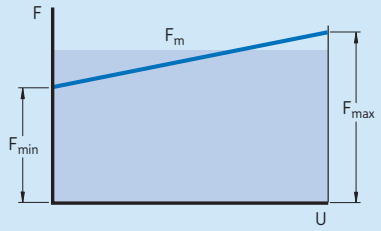

Diagram 2

Rotating load

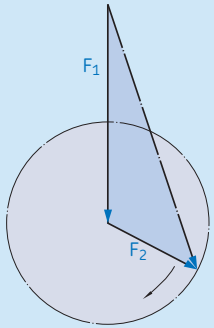

Diagram 3

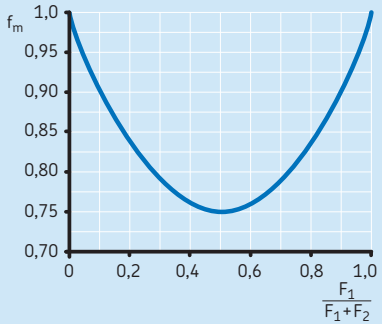

Fluctuating bearing load

In applications where the load varies over time, both in magnitude and direction, bearing life cannot be calculated without first calculating the equivalent load related to the variable (or fluctuating) load conditions. To do this, refer to the section *Life calculation with variable operating conditions* in the SKF *General Catalogue* or online in the *SKF Interactive Engineering Catalogue* at www.skf.com.

Mean load within a duty interval

Within each loading interval, the operating conditions can vary slightly from the nominal value. Assuming that the operating conditions, e.g. speed and load direction, are fairly constant and the magnitude of the load constantly varies between a minimum value F_{min} and a maximum value F_{max} (**→ diagram 1**), the mean load can be obtained from

$$F_m = \frac{F_{min} + 2\,F_{max}}{3}$$

Rotating load

If, as illustrated in **diagram 2**, the load on the bearing consists of a load F_1 which is constant in magnitude and direction (e.g. the weight of a rotor) and a rotating constant load F_2 (e.g. an unbalanced load), the mean load can be obtained from

$$F_m = f_m\,(F_1 + F_2)$$

Values for the factor f_m can be obtained from **diagram 3**.

Dynamic bearing loads

When dete
f
ne -
e
a
l
p
o
a
p
o
d
b -
t
b

- Toothed belts 1,1 to 1,3
- V-belts 1,2 to 2,5
- Flat belts 1,5 to 4,5

The
i
b

Requisite minimum load

I
s
a
t o 0,01 C.

The importance of imposing this load increases where accelerations in the bearing are high, and where speeds are in the region of 75% or more of the limiting speed quoted in the product tables.

The weight of the components supported by the Y-bearing unit, together with external forces, normally exceed the requisite minimum load.

Fig. 2

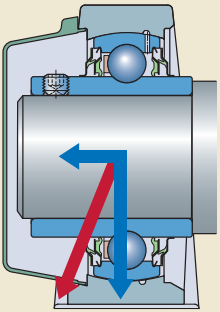

Axial load carrying ability

The axial load carrying ability of a Y-bearing or Y-bearing unit depends not so much on its internal design as on the way it is locked onto the shaft.

For Y-bearings and Y-bearing units with grub screws or an eccentric locking collar, the maximum axial load that they can support is approximately 20% of the basic dynamic load rating if an unhardened shaft is used and the grub screws are properly tightened.

When a Y-bearing is mounted on an adapter sleeve, its axial load carrying ability depends on the amount of torque used to tighten the lock nut. If the torque prescribed in **table 2** on **page 55**, is used, the axial load carrying ability will be between 15 and 20% of the basic dynamic load rating.

Where the inner rings are supported by an abutment on the shaft (→ **fig. 2**), the axial load carrying ability depends on the nature of this abutment. Generally, however, the axial load on the bearing should not exceed 0,25 C_0.

Additional information about the axial load carrying ability of Y-bearing units is provided in the appropriate chapters of this catalog.

Selecting the bearing unit size using the static load carrying capacity

A Y-bearing or Y-bearing unit size should be determined on the basis of the static load rating C_0, instead of bearing life, when one of the following conditions exists:

- The bearing is stationary and subjected to continuous or intermittent (shock) loads.
- The bearing makes slow oscillating or alignment movements under load.
- The bearing rotates under load at a very slow speed ($n < 10$ r/min) and is not required to have a long service life. In this case, the life equation for a given equivalent load P would give such a low requisite basic dynamic load rating C that the bearing selected on a life basis would be seriously overloaded in service.
- The bearing rotates and, in addition to the normal operating loads, has to sustain heavy shock loads that act during a fraction of a revolution.

In all these cases, the permissible load for a Y-bearing is determined by the load that will cause permanent deformations to the ball/raceway contacts and is not determined by material fatigue. Heavy loads acting on a stationary or slowly oscillating bearing, or shock loads on a rotating bearing, produce flattened areas on the balls and indentations on the raceways. The indentations may be irregularly spaced around the raceway, or may be evenly spaced at positions corresponding to the spacing of the balls. If the load acts for several revolutions, the deformation will be evenly distributed over the whole raceway.

The extent to which this damage is detrimental to bearing performance depends on the application and the demands placed on the bearing. To prevent or minimize this type of damage, Y-bearing units with a sufficiently high static load carrying capacity should be selected.

When determining the Y-bearing or Y-bearing unit size based on static load carrying capacity, a given safety factor s_0, which represents the relationship between the basic static load rating C_0 and the equivalent static bearing load P_0, is used to calculate the requisite basic static load rating.

Equivalent static bearing load

An equivalent static bearing load is defined as the hypothetical load which, if applied, would cause the same maximum rolling element load in the bearing as the actual loads. The equivalent static bearing load for Y-bearings and Y-bearing units is obtained from the general equation

$$P_0 = 0{,}6\ F_r + 0{,}5\ F_a$$

where
P_0 = equivalent static bearing load, kN
F_r = actual radial bearing load, kN
F_a = actual axial bearing load, kN

If $P_0 < F_r$, calculate with $P_0 = F_r$.

NOTE: When calculating P_0, the maximum load that can occur should be used and its radial and axial components inserted in the equation above. If a static load acts in different directions on a bearing, the magnitude of these components will change. In these cases, the components of the load giving the largest value of the equivalent static bearing load P_0 should be used.

Requisite static load rating

The requisite basic static load rating C_0 can be determined from

$$C_0 = s_0\ P_0$$

where
C_0 = basic static load rating, kN
P_0 = equivalent static bearing load, kN
s_0 = static safety factor

Experience based guideline values of the static safety factor s_0 for Y-bearings and Y-bearing units are provided in **table 4**.

Table 4

Guideline values for static safety factor s_0

Type of operation	Required static safety factor s_0
Normal loads and smooth, vibration-free operation, where noise levels are not specified, and speeds are very low	≥ 0,5
Normal loads and smooth, vibration-free operation, where noise levels are normal	≥ 1
Normal loads and high degree of running accuracy, where low noise levels are specified	≥ 2
Pronounced shock loads, very slow or non-rotating bearings	≥ 2

Checking the static load carrying capacity

For dynamically loaded bearings that have been selected based on requisite life, it is advisable, where the equivalent static bearing load P_0 is known, to check that the static load carrying capacity is adequate using

$$s_0 = C_0/P_0$$

If the s_0 value obtained is less than the recommended guideline value (→ **table 4**), then a larger Y-bearing or Y-bearing unit should be selected.

Speeds

The speed at which a Y-bearing or Y-bearing unit can operate depends mainly on the type of seal that is used and the method used to lock the bearing onto the shaft. The permissible operating speed also depends on the shaft tolerance in applications with:

- Y-bearings with grub screws, YAT 2 and YAR 2-2F series
- Y-bearings with an eccentric locking collar, YET 2 and YEL 2-2F series

The higher the figure following the tolerance symbol h, the lower the permissible speed. Guideline values for the limiting speeds are provided in **table 1**.

For bearings with multiple seals (2RF design), the limiting speed is about 60% of the values quoted in **table 1** for bearings mounted on an h6 tolerance shaft. For the following bearings, the limiting speed depends on the seals:

- Y-bearings with a tapered bore on an adapter sleeve, YSA 2-2FK + H 23 series
- Y-bearings with a standard inner ring, 17262(00)-2RS1 and 17263(00)-2RS1 series
- Y-bearings with SKF ConCentra locking, used in SKF ConCentra ball bearing units only

The values for the limiting speed are provided in the product tables and in **table 1** to enable easy comparison.

The limiting speeds for Y-bearings and Y-bearing units for inch shafts are the same as those for the corresponding metric bearing.

Table 1

Limiting speeds for Y-bearings

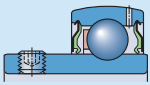

YAT, YAR

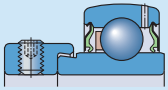

YET, YEL

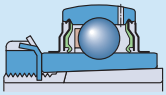

YSA + H 23



1726...

Bearing size[1]	Limiting speed for Y-bearings in the series YAT 2, YAR 2, YET 2, YEL 2 for shafts machined to tolerance					YSA 2 K + H 23	17262(00)	17263(00)	Limiting speed for SKF ConCentra ball bearing units
	h6	h7	h8	h9	h11				
–	r/min								
03	9 500	6 000	4 300	1 500	950	–	12 000	–	–
04	8 500	5 300	3 800	1 300	850	–	10 000	–	–
05	7 000	4 500	3 200	1 000	700	7 000	8 500	7 500	7 000
06	6 300	4 000	2 800	900	630	6 300	7 500	6 300	6 300
07	5 300	3 400	2 200	750	530	5 300	6 300	6 000	5 300
08	4 800	3 000	1 900	670	480	4 800	5 600	5 000	4 800
09	4 300	2 600	1 700	600	430	4 300	5 000	4 500	4 300
10	4 000	2 400	1 600	560	400	4 000	4 800	4 300	4 000
11	3 600	2 000	1 400	500	360	3 600	4 300	–	3 600
12	3 400	1 900	1 300	480	340	3 400	4 000	–	3 400
13	3 000	1 700	1 100	430	300	3 000	–	–	3 000
14	2 800	1 600	1 000	400	280	–	–	–	–
15	2 600	1 500	950	380	260	–	–	–	2 600
16	2 400	1 400	900	360	240	–	–	–	–
17	2 200	1 300	850	340	220	–	–	–	–
18	2 000	1 200	800	320	200	–	–	–	–
20	1 900	1 100	750	300	190	–	–	–	–

[1] For example: bearing size 06 includes all bearings based on a Y 206 bearing, such as YAR 206-2F, YAR 206-101-2F, YAR 206-102-2F, YAR 206-103-2F, YAR 206-104-2F

Design of Y-bearing arrangements

Axial displacement

Y-bearing units do not accommodate axial displacement of the shaft and are therefore not normally suitable for non-locating bearing (free unit) arrangements. The distance between bearing positions should therefore be short or the units should be supported by resilient sheet metal support surfaces or walls to prevent them from being subjected to excessive stresses as a result of thermal elongation of the shaft (→ **fig. 1**).

In applications where there are low speeds, light loads, and the distance between the bearing positions is too long or the operating temperatures too high and one bearing position has to accommodate thermal elongation of the shaft, the following arrangement is recommended.

The shaft on the non-locating side should be provided with one or two grooves 120° apart, to engage one of the following:

- grub screws with a finger, e.g. in accordance with ISO 4028:2003, but with fine thread according to **table 1**, secured by a nut and spring washer or star lock washer (→ **fig. 2**)
- flat head screws in accordance with ISO 1580:1994, but with fine thread according to **table 1**, locked with a spring or star lock washer (→ **fig. 3**)

The finger(s) and groove(s) accommodate changes in shaft length and prevent relative rotational movements between the shaft and bearing bore. To help provide trouble-free operation, the ends of the grub screws should be ground and the sliding surfaces in the shaft grooves coated with a lubricant paste.

Fig. 1

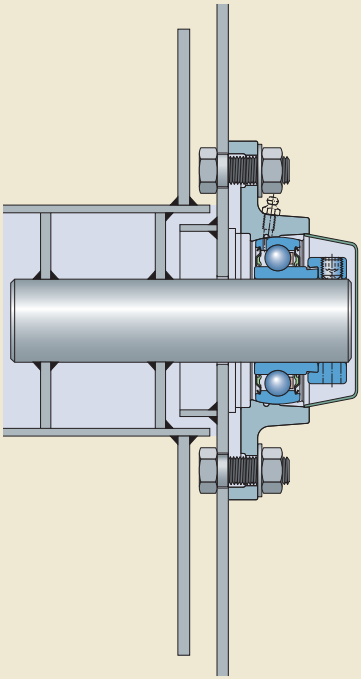

Fig. 2

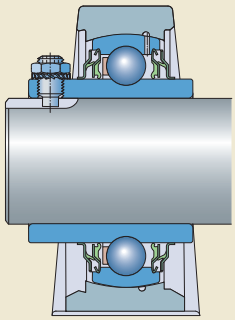

Fig. 3

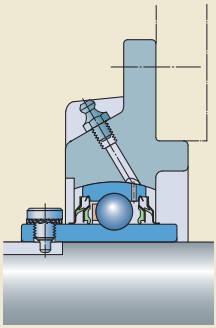

Table 1

Threaded holes in the inner ring of YAR and YAT bearings

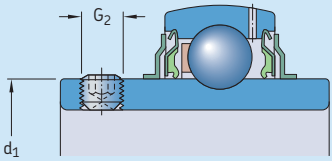

Bearing size[1]	Outer diameter of inner ring d_1	Threaded holes YAR bearing with metric bore G_2	YAR bearing with inch bore G_2	YAT bearing with metric bore G_2	YAT bearing with inch bore G_2
–	mm	–			
03	24,2	M 6 × 0,75	#10-32 UNF	M 6 × 0,75	#10-32 UNF
04	28,2	M 6 × 0,75	1/4"-28 UNF	M 6 × 0,75	1/4"-28 UNF
05	33,7	M 6 × 0,75	1/4"-28 UNF	M 6 × 0,75	1/4"-28 UNF
06	39,7	M 6 × 0,75	1/4"-28 UNF	M 6 × 0,75	5/16"-24 UNF
07	46,1	M 6 × 0,75	5/16"-24 UNF	M 6 × 0,75	5/16"-24 UNF
08	51,8	M 8 × 1	5/16"-24 UNF	M 6 × 0,75	5/16"-24 UNF
09	56,8	M 8 × 1	5/16"-24 UNF	M 6 × 0,75	5/16"-24 UNF
10	62,5	M 10 × 1	3/8"-24 UNF	M 8 × 1	3/8"-24 UNF
11	69,1	M 10 × 1	3/8"-24 UNF	–	3/8"-24 UNF
12	75,6	M 10 × 1	3/8"-24 UNF	–	3/8"-24 UNF
13	82,5	M 10 × 1	3/8"-24 UNF	–	–
14	87	M 10 × 1	7/16"-20 UNF	–	–
15	92	M 10 × 1	7/16"-20 UNF	–	3/8"-24 UNF
16	97,4	M 10 × 1	7/16"-20 UNF	–	3/8"-24 UNF
17	105	M 12 × 1,5	–	–	–
18	112,5	M 12 × 1,5	–	–	–
20	124,8	M 12 × 1,5	–	–	–

[1] For example: bearing size 06 includes all bearings based on a Y 206 bearing, such as YAR 206-101-2F, YAR 206-102-2F, YAR 206-2F, YAR 206-103-2F, YAR 206-104-2F

Misalignment

Y ommodate initial misalignment (→ **fig. 4**) of up to:

- 5° when relubrication is not required
- 2° when relubrication is required

Additionally, operational shaft deflections of a few minutes of arc can be permitted.

Y-bearing units with pressed steel housings cannot accommodate misalignment once the attachment bolts have been fully tightened, unless they are equipped with a rubber seating ring (→ **page 45**).

Support surfaces

To maximize the service life of Y-bearing units, the support surfaces must be manufactured with:

- a roughness of $R_a \leq 12{,}5$ µm
- a flatness (planicity) tolerance to IT7 or IT8

When a heavy load, parallel to the housing base, acts on a Y-bearing unit (→ **fig. 5**) SKF recommends doweling the housing to the support surface. The position and size of the holes for the dowel pins are listed in the relevant product sections.

Fig. 5

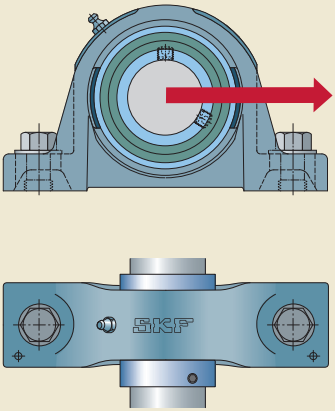

Fig. 4

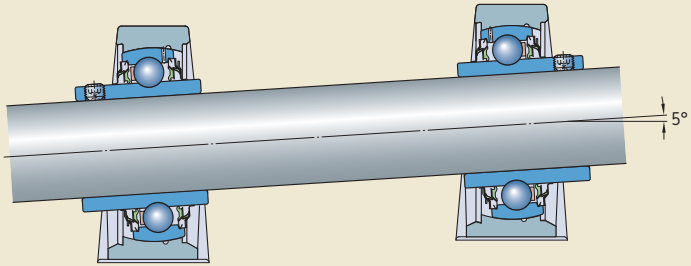

Attaching to the support surface

To attach Y-bearing units to the support surface, SKF recommends using 8.8 class bolts or studs and a washer to ISO 7089:2000 or 7090:2000 and a spring washer. Hexagonal head bolts in accordance with ISO 4014:1999 are appropriate. Alternatively, hexagonal socket head cap screws in accordance with ISO 4762:1988 can be used.

Appropriate fastener sizes are listed in the product tables.

Shaft tolerances

Recommended fits for Y-bearings are listed in **table 2**.

For moderate loads (0,035 C < P ≤ 0,05 C) the shaft seats for Y-bearings with grub screws or an eccentric locking collar should be machined to an h7 tolerance. For light loads and low speeds, an h8 shaft tolerance is sufficient and, for very simple applications, h9 to h11 shaft tolerances may be used. **Fig. 6** illustrates the location of the most commonly used ISO shaft tolerance grades for Y-bearings with grub screws or an eccentric locking collar. The values of these ISO tolerances are listed in **table 3a**, **page 44**.

Fig. 6

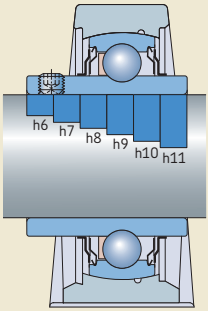

Table 2

Recommended fits

Operating conditions	Tolerance
Y-bearings with grub screws or an eccentric locking collar	
P > 0,05 C and/or high speeds	h6
0,035 C < P ≤ 0,05 C	h7
0,02 C < P ≤ 0,035 C and/or low speeds	h8
Simple bearing arrangements or P ≤ 0,02 C	h9 – h11
Y-bearings with a tapered bore on an adapter sleeve or Y-bearings with SKF ConCentra locking	
All loads and speeds	h9/IT5
Y-bearings with a standard inner ring	
P > 0,035 C	
Shaft diameter ≤ 17 mm	j5
Shaft diameter ≥ 20 mm	k5
P ≤ 0,035 C	
Shaft diameter ≥ 20 mm	j6

Table 3b

ISO shaft tolerances for Y-bearings with a standard inner ring

Shaft diameter d		Deviations of shaft diameter					
		j5		j6		k5	
		Deviation					
over	incl.	high	low	high	low	high	low
mm		µm					
10	**18**	+5	–3	+8	–3	+9	+1
18	**30**	+5	–4	+9	–4	+11	+2
30	**50**	+6	–5	+11	–5	+13	+2
50	**80**	+6	–7	+12	–7	+15	+2

For Y-bearings on an adapter sleeve or Y-bearings with SKF ConCentra locking, a shaft seat machined to h9/IT5 tolerance is adequate. The values for h9 ISO tolerances are listed in **table 3a**.

For Y-bearings with a standard inner ring, the same recommendations apply as for standard deep groove ball bearings (→ **table 2**, **page 43**). The values of these ISO tolerances are listed in **table 3b**.

Table 3a

ISO shaft tolerances for Y-bearings, except for Y-bearings with a standard inner ring

Shaft diameter d		Deviations of shaft diameter											
		h6		h7		h8		h9		h10		h11	
		Deviation											
over	incl.	high	low	high	low	high	low	high	low	high	low	high	low
mm		µm											
10	**18**	0	–11	0	–18	0	–27	0	–43	0	–70	0	–110
18	**30**	0	–13	0	–21	0	–33	0	–52	0	–84	0	–130
30	**50**	0	–16	0	–25	0	–39	0	–62	0	–100	0	–160
50	**80**	0	–19	0	–30	0	–46	0	–74	0	–120	0	–190
80	**120**	0	–22	0	–35	0	–54	0	–87	0	–140	0	–220

Rubber seating rings

Rubber seating rings in the RIS 2 series (→ **fig. 7**) are primarily intended to "cushion" Y-bearings in pressed steel plummer block housings. Located between the bearing outer ring and housing bore, they dampen vibration and noise (→ **fig. 8**) and enable the bearings to be displaced slightly in their housings to accommodate small shaft elongation or misalignment.

For some applications, rubber seating rings may be fitted to the Y-bearing outer rings to convert Y-bearings to support rollers, and serve as tyres, and to run quietly and protect the counter surfaces (→ **fig. 9**).

The seating rings in the RIS 2 series are made from acrylonitrile-butadiene rubber (NBR) and have a convex sphered outside diameter. The rings can operate at temperatures from –30 to +100 °C.

The product tables for Y-bearing units with a pressed steel plummer block housing are listed with their individual components, e.g. housing, Y-bearing and rubber seating ring.

The designation and the dimensions of rubber seating rings are listed in **table 4**.

Fig. 7



Fig. 8

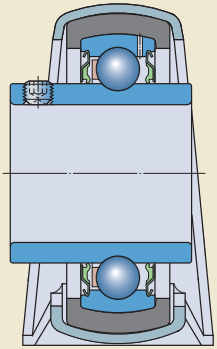

Fig. 9

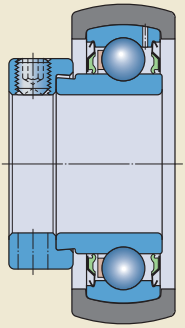

Table 4

Rubber seating rings

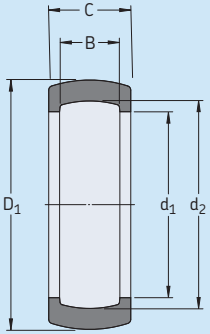

Y-bearing Outside diameter D	**Rubber seating ring Dimensions** D_1	d_1	d_2	B	C	**Mass**	**Designation**	**Suitable Y-bearing** Size
mm	mm					g	–	–
40	47,3	35,5	39,8	12	18	12	**RIS 203**	03
47	52,3	41,2	46,8	14	19	11,5	**RIS 204**	04
52	62,3	46,4	51,8	15	20,5	26,5	**RIS 205**	05
62	72,3	54,6	61,8	18	21,5	31	**RIS 206 A**	06
72	80,3	63,7	71,8	19	23	32	**RIS 207 A**	07
80	85,3	70,7	79,7	21	24	26	**RIS 208 A**	08

End covers

To protect the bearing arrangement at the end of a shaft, and to avoid the possibility of an accident caused by an exposed shaft end, end covers are available for all composite Y-bearing units and for most cast Y-bearing units. The end covers are made from polypropylene (PP) , have good resistance to most chemicals and can withstand operating temperatures up to 100 °C. They can be snapped into the recesses provided in the housing bore.

Three different end cover designs are available:

- ECY, a black end cover for shaft ends (→ **fig. 10**)
- ECW (→ **fig. 12**) for composite, cast iron, zinc-coated and stainless steel SKF Food Line Y-bearing units
- ECL (**fig. 13**) for some of the composite SKF Food Line Y-bearing units identified by the suffix L in the designation

In the product tables, the end covers are listed together with those units that can accommodate them. The designation of the end cover is listed together with the distance A_5 that the end cover protrudes from the housing (→ **fig. 11**).

For additional information about the end covers for Y-bearing units for the food industry refer to *SKF Food Line Y-bearing units* brochure (PUB BU/P1 10844/1 EN – September 2011).

Fig. 10



Fig. 11

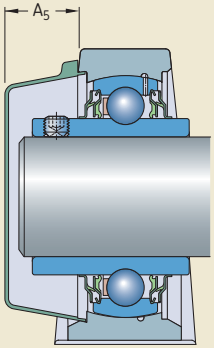

Fig. 12

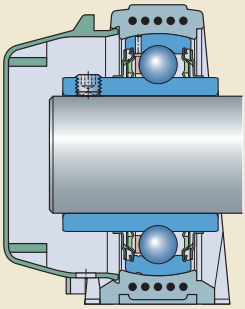

Fig. 13

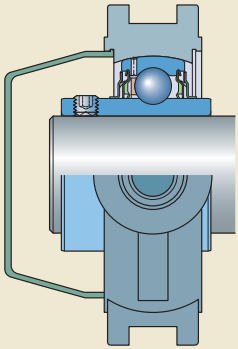

Lubrication and maintenance

Grease fills

Standard SKF Y-bearings and Y-bearing units are filled with a high-quality, long-lasting mineral oil based grease that has a lithium-calcium thickener. This grease has a consistency of 2 on the NLGI scale. This grease is extremely water resistant and will provide long service life even under heavy loads. The properties of this grease are listed in **table 1**.

YAR 2-2RF/HV series Y-bearings made of stainless steel and YAR 2-2RF/VE495 series Y-bearings with zinc coated rings and stainless steel flingers are filled with a special food-grade grease. This grease fulfils the requirements listed in the *Guidelines of section 21 CFR 178.3570* of the FDA (US Food and Drug Administration) regulations. It is approved by the USDA (United States Department of Agriculture) for Category H1 use (occasional contact with food stuffs). This food-grade grease shows very good rust inhibiting properties, good water resistance and anti-wear characteristics as well as high ageing and oxidation resistance. The properties of this grease are listed in **table 1**.

Y-bearings with a square or hexagonal bore are filled with a premium quality grease, which has good water and corrosion resistant properties and provides excellent lubrication at high operating temperatures (designation suffix VT357). The properties of this grease are listed in **table 1**.

Relubrication

Relubrication of Y-bearing units is not required if:

- loads and speeds are moderate
- vibration does not occur
- operating temperatures are between 40 and 55 °C

Y-bearing units with a pressed steel housing are not equipped with a grease fitting and therefore cannot be relubricated.

Relubrication will enable the bearing to realize maximum service life in cases and applications where Y-bearings or Y-bearing units:

- are exposed to high humidity or severe contamination
- have to accommodate heavy loads
- have to operate at high speeds or at temperatures above 55 °C for extended periods

When relubricating, grease should be pumped slowly into the running bearing until fresh grease starts to escape from the seal.

NOTE: Excessive pressure from pumping too quickly may damage the seals.

Detailed information about SKF bearing greases can be found in the catalogue MP3000 *SKF Maintenance and Lubrication Products* or online at www.skf.com.

Relubricating Y-bearing units with cast housings

To relubricate Y-bearing units with cast housings, SKF LGWA 2, LGMT 2 or LGMT 3 greases can be used. Each of these greases is fully compatible with the original grease fill from the factory.

Y-bearing units with a cast housing for inch shafts larger than 1 inch (i.e. units comprising a housings with designation suffix U) are equipped with a grease fitting with a 1/8 NPT thread. All other Y-bearing units with a cast housing are equipped with a grease fitting with a 1/4-28 SAE-LT thread. The hole for the grease fitting has a 1/4-28 UNF thread, which can be changed to G 1/4, using an LAPN 1/4 UNF adapter.

Table 1

Lubricating greases

Technical specification	**Grease fills in** standard Y-bearings, standard Y-bearing units	YAR 2-2RF/HV and YAR 2-2RF/VE495 series Y-bearings, Y-bearing units for the food industry	YHB 2-2LS8W/VT357 and YHC 2-2LS8W/VT357 series Y-bearings
Thickener	Lithium-calcium soap	Aluminium-complex soap	Lithium-complex soap
Base oil	Mineral oil	Synthetic hydrocarbon oil	Mineral oil
Colour	Yellowish brown	White	Amber
Temperature range [°C] (continuous operation)	–30 to +120[1)]	–45 to +150[2)]	–20 to +140[3)]
Kinematic viscosity [mm²/s] of base oil at 40 °C/100 °C	190/15	100/14,4	110/13
Consistency (to NLGI scale)	2	2	3
Other	Long life grease	Fulfils the requirements of the *Guidelines of section* 21 CFR 178.3570 of the FDA (US Food and Drug Administration) regulations	–

[1)] The temperature range for reliable operation in accordance with the SKF traffic light concept is between 10 and 120 °C.
[2)] The temperature range for reliable operation in accordance with the SKF traffic light concept is between 20 and 150 °C.
[3)] The temperature range for reliable operation in accordance with the SKF traffic light concept is between 50 and 140 °C.

Relubrication intervals

The relubrication interval t_f can be estimated from **diagram 1** as a function of the rotational speed n (r/min), the bearing mean diameter d_m (→ **table 2**) and the operating temperature (°C).

The recommended intervals correspond to a time when 90% of the bearings are still reliably lubricated, and represent L_{10} grease life. When the L_{10} grease life is equivalent to or higher than the rating life of the Y-bearing, the bearing is considered to be lubricated for life and relubrication is not required.

The intervals obtained from **diagram 1** are valid for Y-bearings and Y-bearing units filled with the standard high quality long lasting mineral oil based grease, as well as for food-grade grease:

- on horizontal shafts
- in stationary machines
- P ≤ 0,05 C

If operating conditions differ, reduce the relubrication intervals obtained from **diagram 1** as follows:

- on vertical shafts by 50%
- at heavier loads, e.g. at P > 0,10 C, by roughly 50%

In severe, very dirty or damp environments, more frequent relubrication might be necessary. When the operating temperatures are constantly below 40 °C, the grease life is shortened because oil separation is reduced.

Vibration can have a negative influence on grease life too. The extent cannot be quantified exactly, but it can be noticeable if the normal operating temperature increases.

The values for reducing the relubrication intervals are estimates. If in doubt, contact the SKF application engineering service.

In cases where machines and equipment are used for a limited period of time, SKF recommends relubricating each bearing at the end of the operational period, i.e. immediately before being laid up.

Table 2

Bearing mean diameter d_m

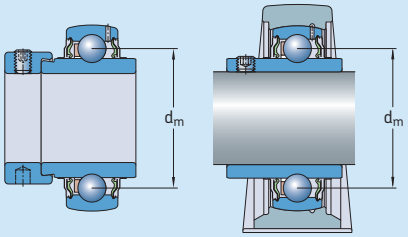

Bearing size[1]	Bearing mean diameter d_m
–	mm
03	28,5
04	33,5
05	39
06	46
07	53,5
08	60
09	65
10	70
11	77,5
12	85
13	92,5
14	97,5
15	102,5
16	110
17	117,5
18	126
20	141

[1] For example: bearing size 06 includes all bearings based on a Y 206 bearing, such as YAR 206-101-2F, YAR 206-102-2F, YAR 206-2F, YAR 206-103-2F, YAR 206 104¬ 2F

Diagram 1

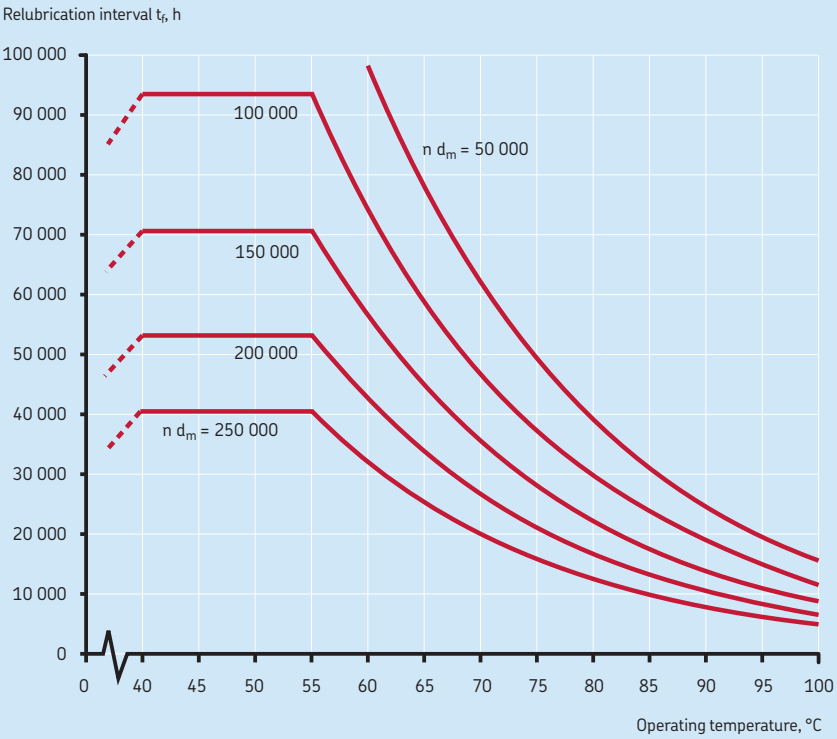
Relubrication interval t_f, h
100 000
90 000
80 000
70 000
60 000
50 000
40 000
30 000
20 000
10 000
0
100 000
150 000
200 000
n d_m = 250 000
n d_m = 50 000
0
40
45
50
55
60
65
70
75
80
85
90
95
100
Operating temperature, °C

Mounting instructions

Mounting instructions – general

To provide proper bearing performance and prevent premature failure, skill and cleanliness when mounting Y-bearings or Y-bearing units are necessary. As precision components, they should be handled carefully when mounting. It is also important to choose the appropriate method of mounting and to use the correct tools.

The method used for mounting a Y-bearing unit depends on:

- the overall machine design
- the Y-bearing housing design
- the method used to attach the unit to the shaft

NOTE: Failure to carefully follow applicable mounting instructions can result in premature bearing failure or improper performance. For further information, contact the SKF application engineering service.

Detailed mounting instructions can be found on the following pages.

Y-bearings, Y-housings or Y-bearing units should not be removed from their original packaging until immediately before they are mounted.

Before installing a Y-bearing unit, check that the shaft is clean and free of any burrs and that the shaft seat is within tolerance. Also be sure that the support surfaces are clean and free of burrs and that the flatness is within the IT7 tolerance grade and that the roughness $R_a \leq 12{,}5$ µm.

Fig. 1

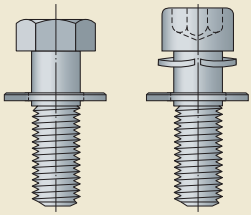

Tools

To mount or dismount Y-bearing units, the following tools are required:

- a hexagonal key (hex wrench) to tighten or loosen grub (set) screws (→ **table 1**, **page 54**)
- a hook spanner to tighten or loosen the lock nut on an adapter sleeve (→ **table 2**, **page 55**)
- a hook spanner with a stud to tighten or loosen the eccentric locking collar
- a spanner or hexagonal key to tighten or loosen the fasteners

The hook spanners are part of the comprehensive SKF range of maintenance products. Detailed information can be found in the printed catalogue *SKF Maintenance and Lubrication Products* or online at www.skf.com.

Attaching Y-bearing units to the support base

To reduce vibration and enable heat to dissipate from the unit, the housing must be firmly attached to the support base. To attach Y-bearing units to the support surface, SKF recommends using 8.8 class bolts or studs and a washer to ISO 7089:2000 or 7090:2000 and a spring

washer. Hexagonal head bolts in accordance with ISO 4014:1999 are appropriate. Alternatively, hexagonal socket head cap screws in accordance with ISO 4762:1988 can be used (→ **fig. 1**).

Assembling units

In cases where the Y-bearing and composite or cast Y-housing are not supplied as a unit, the first step is to assemble the bearing into the housing. To do this, start by removing the locking collar if the bearing has one. Then insert the bearing into the filling slot in the housing bore (→ **fig. 2**) and with a round piece of wood or pipe, swivel the bearing into position so that the locking device is facing in the same direction as the filling slots (→ **fig. 3**). When installing standard bearings, make sure that the relubrication hole in the bearing on the side of the locking device does not coincide with the filling slot in the housing, otherwise grease leakage may result (→ **fig. 4**).

Fig. 2



Fig. 3



Fig. 4

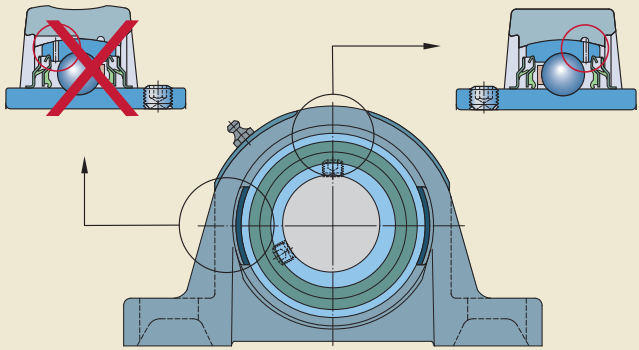

Table 1

Hexagonal keys to tighten grub screws in inner rings or eccentric locking collars – sizes and tightening torques

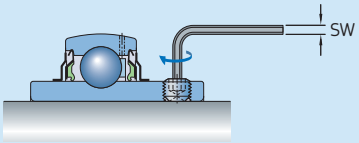

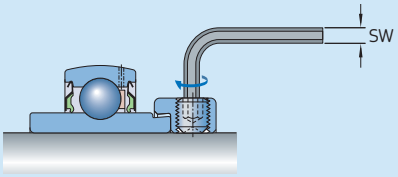

Bearing size[1]	Bearing or unit with metric bore		Bearing or unit with inch bore	
	Hexagonal key size SW	Tightening torque	Hexagonal key size SW	Tightening torque
–	mm	Nm	inch	Nm
Bearings in the YAR series, unit with designation suffix TF, TR				
03	3	4	3/32	4
04	3	4	1/8	4
05	3	4	1/8	4
06	3	4	1/8	4
07	3	4	5/32	6,5
08	4	6,5	5/32	6,5
09	4	6,5	5/32	6,5
10	5	16,5	3/16	16,5
11	5	16,5	3/16	16,5
12	5	16,5	3/16	16,5
13	5	16,5	3/16	16,5
14	5	16,5	7/32	28,5
15	5	16,5	7/32	28,5
16	5	16,5	7/32	28,5
17	6	28,5	–	–
18	6	28,5	–	–
20	6	28,5	–	–

Bearing size[1]	Bearing or unit with metric bore		Bearing or unit with inch bore	
	Hexagonal key size SW	Tightening torque	Hexagonal key size SW	Tightening torque
–	mm	Nm	inch	Nm
Bearings in the YAT series, units with designation suffix RM				
03	3	4	3/32	4
04	3	4	1/8	4
05	3	4	1/8	4
06	3	4	5/32	6,5
07	3	4	5/32	6,5
08	3	4	5/32	6,5
09	3	4	5/32	6,5
10	4	6,5	5/32	6,5
11	–	–	3/16	16,5
12	–	–	3/16	16,5
15	–	–	3/16	16,5
16	–	–	3/16	16,5
Bearings in the YET or YEL series, units with designation suffix FM or WF				
03	3	4	1/8	4
04	3	4	1/8	4
05	3	4	1/8	4
06	4	6,5	5/32	6,5
07	5	16,5	3/16	16,5
08	5	16,5	3/16	16,5
09	5	16,5	3/16	16,5
10	5	16,5	3/16	16,5
11	5	16,5	7/32	28,5
12	5	16,5	7/32	28,5

[1] For example: bearing size 06 includes all bearings based on a Y 206 bearing, such as YAR 206-101-2F, YAR 206-102-2F, YAR 206-2F, YAR 206-103-2F, YAR 206-104-2F

Table 2

Hook spanner size and tightening torque for Y-bearings and Y-bearing units on an adapter sleeve

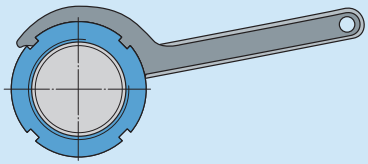

Designation Y-bearing + adapter sleeve	Shaft diameter d		Hook spanner	Tightening torque min	 max
–	mm	in	–	Nm	
Bearings in the YSA series **Units with designation suffix KF**					
YSA 205-2FK + HE 2305	–	3/4	HN 5	13	17
YSA 205-2FK + H 2305	20	–	HN 5	13	17
YSA 206-2FK + HA 2306	–	15/16	HN 6	22	28
YSA 206-2FK + H 2306	25	–	HN 6	22	28
YSA 206-2FK + HE 2306	–	1	HN 6	22	28
YSA 207-2FK + H 2307	30	–	HN 7	27	33
YSA 207-2FK + HA 2307	–	1 3/16	HN 7	27	33
YSA 208-2FK + HE 2308	–	1 1/4	HN 8	35	45
YSA 208-2FK + H 2308	35	–	HN 8	35	45
YSA 209-2FK + HA 2309	–	1 7/16	HN 9	45	55
YSA 209-2FK + HE 2309	–	1 1/2	HN 9	45	55
YSA 209-2FK + H 2309	40	–	HN 9	45	55
YSA 210-2FK + HS 2310	–	1 5/8	HN 10	55	65
YSA 210-2FK + HA 2310	–	1 11/16	HN 10	55	65
YSA 210-2FK + HE 2310	–	1 3/4	HN 10	55	65
YSA 210-2FK + H 2310	45	–	HN 10	55	65
YSA 211-2FK + HA 2311 B	–	1 15/16	HN 11	65	85
YSA 211-2FK + H 2311	50	–	HN 11	65	85
YSA 211-2FK + HE 2311	–	2	HN 11	65	85
YSA 212-2FK + HS 2312	–	2 1/8	HN 12	85	115
YSA 212-2FK + H 2312	55	–	HN 12	85	115
YSA 213-2FK + HA 2313	–	2 3/16	HN 13	110	150
YSA 213-2FK + HE 2313	–	2 1/4	HN 13	110	150
YSA 213-2FK + H 2313	60	–	HN 13	110	150
YSA 213-2FK + HS 2313	–	2 3/8	HN 13	110	150

Mounting instructions for Y-bearing plummer block units

with a composite or cast housing and grub screws

1. Mount any components that are on the shaft between the two Y-bearing units.
2. Slide the Y-bearing plummer (pillow) block unit onto the shaft with its locking device facing outwards.
3. Position the Y-bearing unit on the support surface. Fit the attachment bolts or nuts but do not tighten them.
4. Mount the other Y-bearing plummer block unit on the other end of the shaft, following steps 2 and 3.
5. Carefully align both Y-bearing units, using the shaft. Fully tighten the attachment bolts or nuts in the housing base.
6. Align the shaft in the bearing arrangement axially and – if possible – turn it a few times.
7. Tighten the grub screws in the inner rings of both units to the tightening torque indicated in **table 1** on **page 54** (**→ fig. 1**).
8. If applicable, snap the end cover(s) into place.



Fig. 1

Mounting instructions for Y-bearing plummer block units

with a cast housing and an eccentric locking collar

1. Mount any components that are on the shaft between the two Y-bearing units.
2. With the eccentric locking collar removed, slide the Y-bearing plummer block unit onto the shaft with the locking device facing outwards.
3. Position the Y-bearing unit on the support surface. Fit the attachment bolts or nuts but do not tighten them.
4. Mount the other Y-bearing plummer block unit on the other end of the shaft, following steps 2 and 3.
5. Carefully align both Y-bearing units, using the shaft. Fully tighten the attachment bolts or nuts in the housing base.
6. Align the shaft in the bearing arrangement axially and – if possible – turn it a few times.
7. Place the eccentric locking collars on the inner ring extension of both Y-bearing units and snug tighten them in the main direction of rotation (→ **fig. 1**).
8. Tighten the locking collars to their final position, using a hook spanner with a stud engaging the hole in the circumference of the collar (→ **fig. 2**).
9. Tighten the grub screw in the eccentric locking collar of both Y-bearing units (→ **fig. 3**) to the tightening torque indicated in **table 1** on **page 54**.
10. If applicable, snap the end cover(s) into place.

Fig. 1



Fig. 2



Fig. 3



Mounting instructions for Y-bearing plummer block units

with a cast housing and an adapter sleeve

1. Mount any components that are on the shaft between the two Y-bearing units.
2. Determine the position of the adapter sleeve on the shaft (→ **fig. 1**).
3. Remove the nut and the locking washer from the adapter sleeve (→ **fig. 2**).
4. Wipe the preservative from the bore and outside surface of the sleeve.
5. Expand the adapter sleeve slightly by inserting a screwdriver in the slot of the sleeve and slide the adapter sleeve into position on the shaft (→ **fig. 3**).
6. Slide the Y-bearing plummer block unit up onto the adapter sleeve with the large end of the tapered bore leading, but do not push it.
7. Install the locking washer and screw the lock nut onto the adapter sleeve until the Y-bearing unit is firmly in position on the sleeve.
8. Further tighten the lock nut using one of the following:
   - a hook spanner in the HN series to a tightening angle of about 70° (→ **fig. 4**)
   - a TMHN lock nut spanner to a tightening angle of about 70°
   - a torque wrench to the tightening torque indicated in **table 2** on **page 55**

   Make sure that while tightening the nut, the sleeve does not rotate on the shaft.
9. Lock the nut in position by bending down a tab on the locking washer in one of the slots provided around the circumference of the nut (→ **fig. 5**).
10. Mount the other Y-bearing plummer block unit on the other end of the shaft, following steps 2 through 9.
11. Position the Y-bearing units on their support surfaces. Fit the attachment bolts or nuts but do not tighten them.
12. Carefully align both Y-bearing units, using the shaft and, if possible, turn it a few times. Then tighten the attachment bolts or nuts.
13. If applicable, snap the end cover(s) into place.

Fig. 1

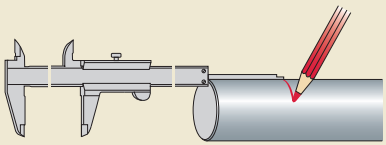

Fig. 2

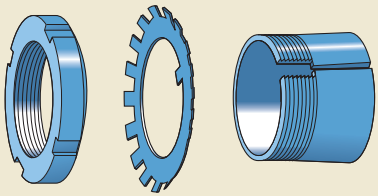

Fig. 3

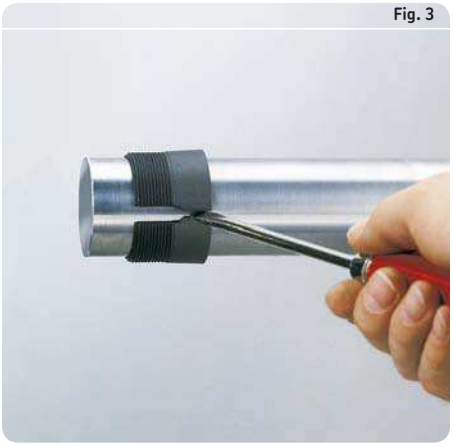

Fig. 4



Fig. 5



Mounting instructions for Y-bearing plummer block units

with a pressed steel housing and grub screws

1. Mount any components that are on the shaft between the two Y-bearing units.
2. Slide the Y-bearings with the locking device facing outward onto the shaft – at both ends. Install the rubber seating ring on the outside diameter of the bearing (optional).
3. Place the base of each housing on its support surface.
4. Place the shaft and Y-bearings into position in each housing base. Then, place the housing caps over the bearings (**→ fig. 1**) and install the attachment bolts or nuts.
5. Carefully align both Y-bearing units, using the shaft. Then, tighten the attachment bolts or nuts.
6. Align the shaft in the bearing arrangement axially and – if possible – turn it a few times.
7. Tighten the grub screws in the inner ring of both bearings (**→ fig. 2**) to the tightening torque indicated in **table 1** on **page 54**.

Fig. 1



Fig. 2



Mounting instructions for Y-bearing plummer block units

with a pressed steel housing and an eccentric locking collar

1. Mount any components that are on the shaft between the two Y-bearing units.
2. With the eccentric locking collar removed, slide the Y-bearings onto both shaft ends with the locking device facing outwards. Install the rubber seating ring on the outside diameter of the bearing (optional).
3. Place the base of each housing on its support surface.
4. Place the shaft and Y-bearings into position in each housing base. Then, place the housing caps over the bearings (→ **fig. 1**) and install the attachment bolts or nuts.
5. Carefully align both Y-bearing units, using the shaft. Then, tighten the attachment bolts or nuts.
6. Align the shaft in the bearing arrangement axially and – if possible – turn it a few times.
7. Place the eccentric locking collars on the inner ring extension of both Y-bearings and snug tighten them in the main direction of rotation (→ **fig. 2**).
8. Tighten the locking collars to their final position, using a hook spanner with a stud engaging the hole in the circumference of the collar (→ **fig. 3**).
9. Tighten the grub screw in the eccentric locking collar of both Y-bearings (→ **fig. 4**) to the tightening torque indicated in **table 1** on **page 54**.


Fig. 1


Fig. 2


Fig. 3


Fig. 4

Mounting instructions for flanged Y-bearing units

with a composite (Y-TECH) or cast housing and grub screws

1. Mount any components that are on the shaft between the two Y-bearing units.
2. Slide the flanged Y-bearing unit onto the shaft.
3. Fasten the Y-bearing unit securely to the machine wall.
4. Mount the other flanged Y-bearing unit to the opposite end of the shaft, following steps 2 and 3.
5. Align the shaft in the bearing arrangement axially and – if possible – turn it a few times.
6. Tighten the grub screws on the inner ring of both units (**→ fig. 1**) to the tightening torque indicated in **table 1** on **page 54**.
7. If applicable, snap the end cover(s) into place.

Fig. 1

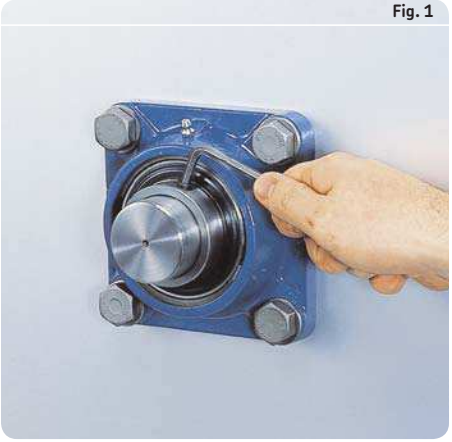

Mounting instructions for flanged Y-bearing units

with a composite (Y-TECH) or cast housing and an eccentric locking collar

1. Mount any components that are on the shaft between the two Y-bearing units.
2. With the eccentric locking collar removed, slide the flanged Y-bearing unit onto the shaft with the locking device facing outwards.
3. Fasten the Y-bearing unit securely to the machine wall.
4. Mount the other flanged Y-bearing unit to the opposite end of the shaft, following steps 2 and 3.
5. Align the shaft in the bearing arrangement axially and – if possible – turn it a few times.
6. Place the eccentric locking collars on the inner ring of both Y-bearings and snug tighten them in the main direction of rotation (→ **fig. 1**).
7. Tighten the locking collars to their final position using a hook spanner with a stud engaging the hole in the circumference of the collar (→ **fig. 2**).
8. Tighten the grub screw in the eccentric locking collar of both units (→ **fig. 3**) to the tightening torque indicated in **table 1** on **page 54**.
9. If applicable, snap the end cover(s) into place.

Fig. 1



Fig. 2



Fig. 3



Mounting instructions for flanged Y-bearing units

with a cast housing and an adapter sleeve

1. Mount any components that are on the shaft between the two Y-bearing units.
2. Determine the position of the adapter sleeve on the shaft (→ **fig. 1**). Take into consideration that later during mounting
   - the Y-bearing unit will move axially on the sleeve or vice versa
   - the shaft will move axially against the Y-bearing unit.

   This is particularly important when mounting the second Y-bearing unit.
3. Remove the nut and locking washer from the adapter sleeve (→ **fig. 2**).
4. Wipe the preservative from the bore and outside surface.
5. Expand the adapter sleeve slightly by inserting a screwdriver in the slot of the sleeve and slide the adapter sleeve into position on the shaft (→ **fig. 3**).
6. Slide the Y-bearing unit up onto the adapter sleeve with the large end of the tapered bore leading, but do not push it.
7. Fasten the Y-bearing unit securely to the machine wall.
8. Install the locking washer and screw the lock nut onto the adapter sleeve until the Y-bearing unit is firmly in position on the sleeve.
9. Further tighten the lock nut using one of the following:
   - a hook spanner in the HN series to a tightening angle of about 70° (→ **fig. 4**)
   - a TMHN lock nut spanner to a tightening angle of about 70°
   - a torque wrench to the tightening torque indicated in **table 2** on **page 55**

   Make sure that while tightening the nut, the sleeve does not rotate on the shaft.
10. Lock the nut in position by bending down a tab on the locking washer into one of the slots provided around the circumference of the nut (→ **fig. 5**).
11. Mount the second Y-bearing unit at the other end of the shaft, following steps 2 through 9.
12. Make sure the shaft turns smoothly and the bearings are not jammed in place. If necessary, remove the last Y-bearing unit to be mounted, determine a new installation position for the adapter sleeve on the shaft and mount the Y-bearing unit again.
13. If the shaft turns smoothly, secure the Y-bearing unit on the adapter sleeve by bending down a tab on the locking washer into one of the slots provided around the circumference of the nut (→ **fig. 5**).
14. If applicable, snap the end cover(s) into place.

Fig. 1

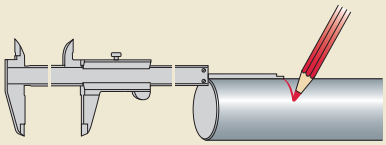

Fig. 2

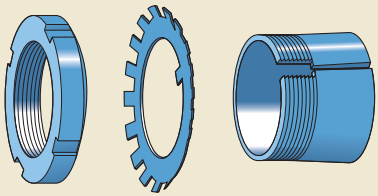

Fig. 3



Fig. 4



Fig. 5



Mounting instructions for flanged Y-bearing units

with a pressed steel housing and grub screws

1. Mount any components that are on the shaft between the two Y-bearing units.
2. Place one housing half into position on the machine wall with threaded fasteners (→ **fig. 1**).
3. With the locking device facing outward, slide the Y-bearing onto the shaft and into the housing half.
4. Place the second housing half into position over the Y-bearing (→ **fig. 2**).
5. Fit the threaded fasteners (nuts or bolts), but do not tighten them.
6. Mount the Y-bearing unit at the other end of the shaft, following steps 2 through 5.
7. Tighten the threaded fasteners holding the flanged units in place.
8. Align the shaft in the bearing arrangement axially and – if possible – turn it a few times.
9. Tighten the grub screws on both units (→ **fig. 3**) to the tightening torque indicated in **table 1** on **page 54**.

Fig. 1



Fig. 2



Fig. 3



Mounting instructions for flanged Y-bearing units

with a pressed steel housing and an eccentric locking collar

1. Mount any components that are on the shaft between the two Y-bearing units.
2. Place one housing half into position on the machine wall with threaded fasteners (→ **fig. 1**).
3. With the eccentric locking collar removed, slide the Y-bearing onto the shaft and into the housing half with the locking device facing outwards.
4. Place the second housing half into position over the Y-bearing (→ **fig. 2**).
5. Fit the threaded fasteners (nuts or bolts), but do not tighten them.
6. Mount the other Y-bearing unit at the other end of the shaft, following steps 2 through 5.
7. Tighten the threaded fasteners holding the flanged units in place.
8. Align the shaft in the bearing arrangement axially and – if possible – turn it a few times.
9. Place the eccentric locking collars on the inner ring extension of both Y-bearings and snug tighten them in the main direction of rotation (→ **fig. 3**).
10. Tighten the locking collars to their final position using a hook spanner with a stud engaging the hole in the circumference of the collar (→ **fig. 4**).
11. Tighten the grub screw in the eccentric locking collar of both units (→ **fig. 5**) to the tightening torque indicated in **table 1** on **page 54**.

Fig. 1



Fig. 2



Fig. 3



Fig. 4



Fig. 5



Mounting instructions for Y-bearing take-up units

with a cast housing and grub screws

1. Mount any components that are on the shaft between the two Y-bearing units.
2. Slide the Y-bearing take-up units onto both shaft ends with the locking device facing outward.
3. Install the shaft and Y-bearing take-up units into the take-up frames and connect the adjustment screws via the cast hole in the units.
4. Align the shaft in the bearing arrangement axially and – if possible – turn it a few times.
5. Tighten the grub screws on both Y-bearing take-up units to the tightening torque indicated in **table 1** on **page 54**.
6. If applicable, snap the end cover(s) into place.

Mounting instructions for Y-bearing take-up units

with a cast housing and an eccentric locking collar

1. Mount any components that are on the shaft between the two Y-bearing units.
2. With the eccentric locking collar removed, slide the Y-bearing take-up units onto both shaft ends with the locking device facing outwards.
3. Install the shaft with the Y-bearing take-up units into the take-up frames and connect the adjustment screws via the cast hole in the units.
4. Align the shaft in the bearing arrangement axially and – if possible – turn it a few times.
5. Place the eccentric locking collars on the inner ring extension of both Y-bearing units and snug tighten them in the main direction of rotation.
6. Tighten the locking collars to their final position using a hook spanner with a stud engaging the hole in the circumference of the collar.
7. Tighten the grub screw in the eccentric locking collar of both Y-bearing units to the tightening torque indicated in **table 1** on **page 54**.
8. If applicable, snap the end cover(s) into place.

Storing Y-bearings and Y-bearing units

Y-bearings and Y-bearing units are normally treated with a rust preventive compound and can be stored in their original unopened package for a number of years. However, they should be kept in a vibration-free, dry environment where the relative humidity does not exceed 60% and the temperature is reasonably constant.

When Y-bearings and Y-bearing units are stored for long periods, they may have a higher initial starting torque than Y-bearings or units recently delivered from the factory. Also, the lubricating properties of the grease may have deteriorated after long periods of storage.

Y-bearings and Y-bearing units, which are no longer in their original packages, must be adequately protected against corrosion and contamination and should also be identified in some way by their complete designation.



Designation systems

The complete designation for a Y-bearing or a Y-bearing unit consists of:

- prefixes, identifying the Y-bearing or Y-bearing unit series
- figures, identifying the size
- suffixes, identifying designs and variants

More details about the basic designations and the supplementary designations can be obtained from the designation charts:

- Y-bearing designation system (→ **table 1**, **page 76**)
- Y-bearing unit designation system (→ **table 2**, **page 77**)



Table 1

Y-bearing designation system

Examples					
	YAR 208-2RF/HV	YAR	2	08	2RF/HV
	YEL 203/15-2FW	YEL	2	03/15	2FW

Bearing series

YAR	Inner ring extended on both sides, with grub screws
YAT	Inner ring extended on one side, with grub screws
YEL	Inner ring extended on both sides, with an eccentric locking collar
YET	Inner ring extended on one side, with an eccentric locking collar
YHB	Inner ring extended on both sides, hexagonal bore
YHC	Inner ring extended on both sides, hexagonal bore
YQC	Inner ring extended on both sides, square bore
YSA	Inner ring symmetrically extended on both sides

Dimension series

2	Bearing to ISO 9628:2006
17262	Bearing to ISO 15:1998, Dimension Series 02, sphered outside diameter
17263	Bearing to ISO 15:1998, Dimension Series 03, sphered outside diameter

Bore diameter

Bearings for metric shafts

03/12	12 mm bore diameter
03/15	15 mm bore diameter
03	17 mm bore diameter
04	20 mm bore diameter
	to
20	100 mm bore diameter

Bearings for inch shafts

Three-figure combination that follows the designation of the basic metric bearing and is separated from this by a hyphen; the first figure is the number of whole inches and the second and third figures are the number of sixteenths of an inch, e.g. 204-012

-012	3/4 in. = 19,050 mm bore diameter
-100	1 in. = 25,400 mm bore diameter
	to
-208	2 1/2 in. = 63,500 mm bore diameter

Suffixes

Seals

–	Contact standard integral seal on both sides of the bearing
2F	Contact standard integral seal with an additional plain flinger on both sides of the bearing
2LS8	Contact seal of synthetic rubber with sheet steel reinforcement on both sides of the bearing
2RF	Contact standard integral seal with an additional rubberized flinger on both sides of the bearing
2RS1	Contact seal of synthetic rubber with sheet steel reinforcement on both sides of the bearing
VP076	Pressed sheet steel shield on both sides of the bearing

Material

HV	Bearing components of stainless steel and food-grade grease
VE495	Zinc-coated inner and outer ring and stainless steel flingers, food-grade grease
VL065	Zinc-coated inner ring bore and side faces

Other features

AH	Bearing for air-handling applications
C	Cylindrical outside diameter
G	Lubrication groove in the outside diameter, located at the side opposite the locking device
GR	Lubrication groove in the outside diameter, located at the side of the locking device
K	Tapered bore, taper 1:12
U	Bearing without an eccentric locking collar
VT357	Bearing filled with a special grease
W	Bearing without lubrication hole(s)
W64	Solid Oil fill

Table 2

Y-bearing unit designation system

Examples								
	FYTBK 30 TR	FY	TB	K	30	TR		
	SY 1.1/2 TF	SY			1.1/2	TF		
	TUJ 50 TF	TUJ			50	TF		
	PFD 40	PF	D		40			

Identification of housing type

	J stands for dimensions to standard JIS 1559-1995
FY(J)	Flanged housing
P	Plummer block housing, pressed steel
PF	Flanged housing, pressed steel
SY(J)	Plummer block housing
TU(J)	Take-up housing

Identification of unit design

–	Base version; when flanged: square flange
C	Flanged unit, round flange
D	Flanged unit, triangular flange
F	Plummer block unit, short base
H	Plummer block unit, lower centre height
M	Plummer block unit, higher load carrying capacity
T	Flanged unit, oval flange
TB	Flanged unit, oval flange
TF	Flanged unit, oval flange, no relubrication facility

Identification of housing material

–	Grey cast iron
K	Composite
Z	Grey cast iron zinc coated
R	Stainless steel

Identification of size

	Bearing units for metric shafts: in millimetres uncoded
12	12 mm bore diameter
	to
100	100 mm bore diameter
	Bearing units for inch shafts: in inches uncoded
3/4	3/4 in. = 19,05 mm bore diameter
	to
2 1/2	2 1/2 in. = 63,5 mm bore diameter
	Housings from grey cast iron or composite material
503	for Y-bearings of sizes 203, 203/12 and 203/15
	to
520	for Y-bearings of size 220
	Housings from sheet steel (not supplied as bearing unit)
40	40 mm housing bore diameter
	to
90	90 mm housing bore diameter

Identification of inserted Y-bearing

FM	Y-bearing with an eccentric locking collar, YET 2 series
KF	Y-bearing with a tapered bore, YSA 2-2FK series
LF	Y-bearing with SKF ConCentra locking
RM	Y-bearing with grub screws, YAT 2 series
TF	Y-bearing with grub screws, YAR 2-2F series
TR	Y-bearing with grub screws, YAR 2-2RF series
WF	Y-bearing with an eccentric locking collar, YEL 2-2F series

Other features

See **table 1** "Y-bearing designation system"


SKF

Y-bearings

Designs **80**
Special designs . . . 81

Y-bearings with grub screws 82
Bearings made of rolling bearing steel 82
Bearings with zinc-coated rings 83
Stainless steel bearings 83

Y-bearings with an eccentric locking collar **84**

Y-bearings with a tapered bore **85**

Y-bearings with a standard inner ring **85**

Y-bearings with a hexagonal or square bore **86**

Seals **87**
Standard seals 87
Standard seals with an additional flinger 87
Multiple seals 87
RS1 seals 88
LS8 seals 88
Shields 88
Permissible operating temperatures for seals 88

Data – general **89**
Dimensions 89
Tolerances 89
Radial internal clearance 90
Cages 91
Grease fills 91
Mounting 91

Product tables **92**
2.1 Y-bearings with grub screws,
metric shafts 92
inch shafts 94
2.2 Y-bearings with an eccentric locking collar,
metric shafts 98
inch shafts 100
2.3 Y-bearings with a tapered bore on an adapter sleeve,
metric shafts 102
inch shafts 104
2.4 Y-bearings with a standard inner ring, metric shafts 106

Designs

SKF Y-bearings, which are usually referred to as insert bearings, are basically sealed deep groove ball bearings in the 62 and 63 series, with a convex outer ring. These bearings are manufactured in a number of different series and sizes and are available with a standard inner ring or an inner ring that is extended on one or both sides (→ **fig. 1**).

The various insert bearing series differ in the way the bearing is located onto the shaft. The most common methods use any one of the following:

- grub (set) screws (→ **fig. 2**)
- eccentric locking collar (→ **fig. 3**)
- adapter sleeve (→ **fig. 4**)
- interference fit (→ **fig. 5**)
- SKF ConCentra locking (→ **fig. 6**)

The standard SKF assortment includes Y-bearings made of rolling bearing steel as well as stainless steel and Y-bearings with zinc-coated components.

Fig. 1

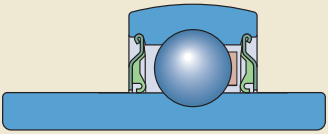

Fig. 2

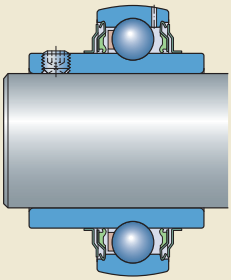

Fig. 3

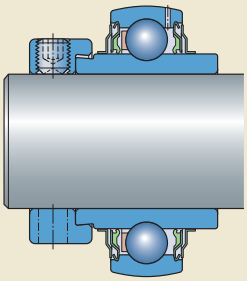

Fig. 4

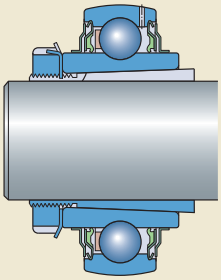

Fig. 5

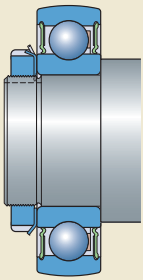

Fig. 6

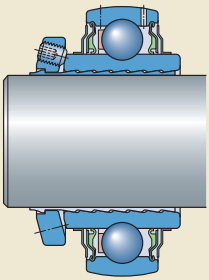

Y-bearings with grub screws

Y-bearings with grub screws in the inner ring are locked in position on the shaft by tightening the two cup point hexagonal grub screws, positioned 120° apart. These bearings are suitable for applications where the direction of rotation is constant or alternating. Two different standard designs are available.

Y-bearings in the YAT 2 series have an extended inner ring on one side, and are sealed with the rugged standard integral seal (→ **fig. 7**). The outer ring has two lubrication holes as standard.

Y-bearings in the YAR 2 series have an extended inner ring on both sides (→ **fig. 8**). This reduces the extent to which the inner ring can tilt on the shaft, which enables the bearing to run more smoothly. These bearings are fitted with the rugged standard integral seal and one of the following flinger options:

- plain sheet steel flingers, designation suffix 2F
- rubberized sheet steel flingers (multiple seal), designation suffix 2RF

The outer ring has two lubrication holes as standard.

Bearings without lubrication holes can be supplied on request. They are identified by the suffix W.

Fig. 7

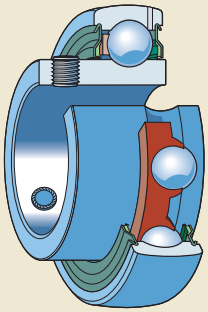

Fig. 8

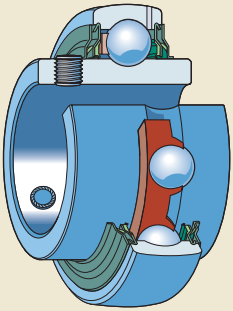

Bearings made of rolling bearing steel

Y-bearings in the YAT 2 and YAR 2 standard series are manufactured from high-grade carbon chromium steel. The SKF range comprises bearings for metric shafts from 12 to 100 mm and inch shafts from 1/2 to 3 inch (→ product table on **pages 92** to **97**).

Bearings with zinc-coated rings

Y-bearings with an extended inner ring on both sides (YAR 2 series) are also available with zinc-coated rings for use in corrosive environments. These bearings, series designation YAR 2-2RF/VE495:

- use highly efficient multiple seals made of food-compatible rubber and stainless steel flingers
- are fitted with grub screws made of stainless steel
- are filled with a food-grade grease
- can be relubricated through the lubrication holes in the outer ring

The SKF range of Y-bearings with zinc-coated rings covers bearings for metric shafts from 20 to 50 mm (→ product table on **page 92**).

Stainless steel bearings

All steel components of stainless steel Y-bearings are made of stainless steel. This includes the rings, balls, sheet metal parts of the seal and the grub screws. The inner ring is extended on both sides. These bearings, series designation YAR 2-2RF/HV:

- use highly efficient multiple seals made of food-compatible rubber
- are filled with a food-grade grease
- can be relubricated through one lubrication hole in the outer ring

The SKF range covers bearings for metric shafts from 20 to 50 mm as well as inch shafts from $^{3}/_{4}$ to 1 $^{15}/_{16}$ inch (→ product table on **page 92** to **96**).

The dynamic load carrying capacity of a stainless steel bearing is less than that of a similarly sized standard steel bearing.

Y-bearings with an eccentric locking collar

Y-bearings with an eccentric locking collar are intended primarily for use in applications where the direction of rotation is constant. On one side of the bearing inner ring is an eccentric extension that fits the locking collar. Turning the locking collar on the inner ring extension in the direction of rotation locks the collar and bearing on the shaft. A single grub screw further secures the collar to the shaft. There are two standard series available from SKF.

Y-bearings in the YET 2 series have an extended inner ring on one side and are fitted with the rugged standard integral seal (→ **fig. 9**). The eccentric collar is coated (zinc-coated for bearings with a metric bore, black oxidized for bearings with an inch bore). The outer ring has two lubrication holes as standard.

Y-bearings in the YEL 2 series have an extended inner ring on both sides (→ **fig. 10**). This reduces the extent to which the inner ring can tilt on the shaft, which enables the bearing to run more smoothly. These bearings are fitted with the rugged standard integral seal and one of the following flinger options:

- plain sheet steel flingers, designation suffix 2F
- rubberized sheet steel flingers (multiple seal), designation suffix 2RF/VL065

The outer ring has two lubrication holes as standard.

Bearings without lubrication holes can be supplied on request. They are identified by the suffix W.

The SKF range comprises bearings for metric shafts from 15 to 60 mm and inch shafts from $^{1}/_{2}$ to 2 $^{7}/_{16}$ inch (→ product table on **pages 98** to **101**).

Fig. 9

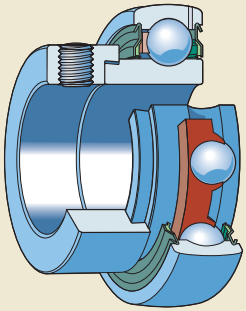

Fig. 10

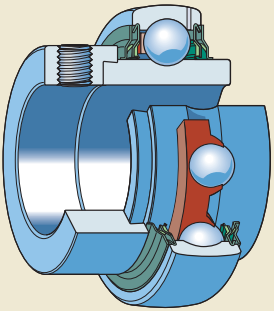

Fig. 11

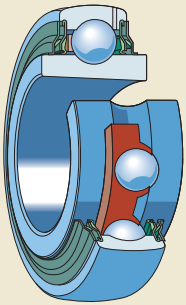

Fig. 12

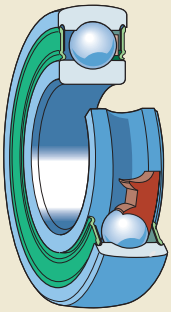

Y-bearings with a tapered bore

Y-bearings in the YSA 2-2FK series (→ **fig. 11**) have a symmetrically extended inner ring on both sides and a tapered bore (taper 1:12) enabling them to be mounted on a standard adapter sleeve in the H 23 series. The appropriate adapter sleeve is not part of the bearing and must be ordered separately.

Y-bearings with a tapered bore are equipped with the rugged standard integral seal, fitted with additional plain sheet steel flingers. The outer ring has two lubrication holes as standard.

Mounting onto an adapter sleeve enables the bearings to operate at higher speeds and run more smoothly in applications where the direction of rotation is constant or alternating.

The SKF range, which comprises bearings with bore diameters ranging from 25 to 65 mm, fits adapter sleeves in the H 23 series for metric shafts ranging from 20 to 60 mm (→ product table on **page 102**). These bearings can also be used on adapter sleeves in the HA 23, HE 23 and HS 23 series for inch shafts ranging from 3/4 to 2 3/8 inch (→ product table on **page 104**).

Y-bearings with a standard inner ring

Y-bearings in the 17262(00)-2RS1 and 17263(00)-2RS1 series (→ **fig. 12**) with a standard inner ring have normal tolerances for the bearing bore diameter and are located on the shaft using an appropriate interference fit. They do not have any lubrication holes in the outer ring. The only difference between these Y-bearings and deep groove ball bearings in the 62 and 63 series is the sphered outside surface of the outer ring.

These Y-bearings are suitable for applications where the direction of the load alternates and where smooth running is a key operational parameter. These bearings can accommodate heavier axial loads than Y-bearings of any other design. They can also operate at the same speeds as the corresponding sealed deep groove ball bearings.

The SKF range comprises bearings for metric shafts from 17 to 60 mm (→ product table on **page 106**).

Y-bearings with a hexagonal or square bore

Y-bearings with a hexagonal or square bore are intended primarily for high torque applications. The bore is produced to a plus tolerance and enables easy mounting and dismounting. These bearings should be axially located on the shaft using adjacent components.

The bearings have a standard outer ring without lubrication holes (designation suffix W).

Bearings in the YHB 2 and YHC 2 series have a hexagonal bore (→ **fig. 13**). They are equipped with rugged contact seals (designation suffix LS8).

For more information, contact the SKF application engineering service.

Fig. 13

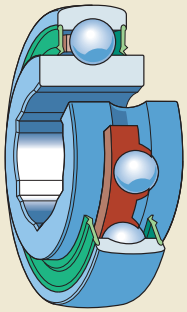

Fig. 14

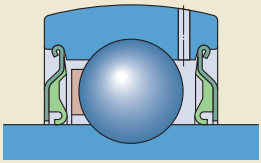

Fig. 15

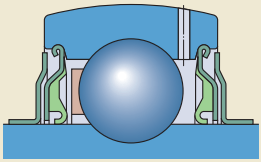

Fig. 16

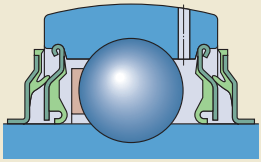

Seals

Since Y-bearings were originally developed for use in agricultural applications, sealing has always been very important. Therefore, SKF Y-bearings are available with different sealing configurations to suit the operating conditions.

Standard seals

The standard seal for SKF Y-bearings is the rugged integral seal. It consists of a pressed sheet steel washer with a sealing lip made of acrylonitrile-butadiene rubber (NBR) vulcanized to its inner surface (→ **fig. 14**). The non-contact sheet steel washer forms a narrow gap with the cylindrical surface of the inner ring shoulder and protects the land-riding seal against coarse contaminants.

Standard seals with an additional flinger

For more contaminated environments, a Y-bearing with an inner ring extended on both sides should be used. These bearings are equipped with seals that have an additional plain, sheet steel flinger on the outboard side of the integral standard seal (→ **fig. 15**) and are identified by the designation suffix 2F. The flingers are made of sheet steel or stainless sheet steel respectively, have an interference fit on the inner ring and considerably enhance the seals' effectiveness without increasing friction.

Multiple seals

For Y-bearing arrangements requiring a high degree of reliability, even in extremely contaminated environments, a bearing with an inner ring extended on both sides should be used with the highly efficient multiple seal arrangement.

In this sealing arrangement (→ **fig. 16**), a flinger with a vulcanized rubber lip is fitted outside the standard integral seal. This acrylonitrile-butadiene rubber lip seals axially against the integral seal. The space between the integral seal and the rubberized flinger is filled with grease to provide additional protection.

RS1 seals

Y-bearings with a standard inner ring, 17262(00)-2RS1 and 17263(00)-2RS1 series, are equipped with the RS1 contact seal developed for standard SKF deep groove ball bearings (→ **fig. 17**). These seals, which are made from oil and wear resistant acrylonitrile-butadiene rubber (NBR), are reinforced with a pressed sheet steel insert and seal against the cylindrical surface of the inner ring shoulder.

Fig. 17

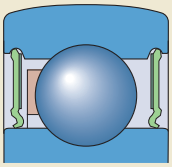

LS8 seals

Y-bearings with a hexagonal bore, series YHB 2 and YHC 2, are equipped with LS8 contact seals (→ **fig. 18**). These seals, which are made from acrylonitrile-butadiene rubber (NBR), are reinforced with a pressed sheet steel insert and seal against the cylindrical surface of the inner ring shoulder.

Fig. 18

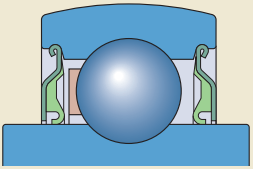

Shields

Y-bearings are also available with shields (→ **fig. 19**), which are identified by the designation suffix VP076.

Pressed steel shields are used in temperature or speed sensitive applications where additional friction is not desirable. In applications where shielded bearings are used, contamination should not be severe and water, steam or moisture should not be able to enter the bearing.

Permissible operating temperatures for seals

Contact seals can be used at operating temperatures between –30 and +100 °C. Temperatures up to 120 °C are also possible for brief periods, but might have a negative effect on the service life of the grease.

Fig. 19

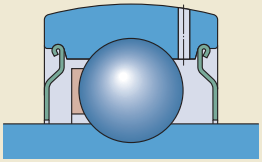

Data – general

Dimensions

- The boundary dimensions of Y-bearings in the YAR 2, YET 2 and YEL 2 series are in accordance with ISO 9628:2006.
- The boundary dimensions of Y-bearings in the 17262(00)-2RS1 and 17263(00)-2RS1 series are in accordance with those of deep groove ball bearings in the 62 and 63 series and are in accordance with ISO 15:1998, except that the bearings have a sphered outside diameter
- The boundary dimensions of Y-bearings in the YSA 2-2FK series are in accordance with JIS 1558-1995
- Y-bearings in the YAT 2, YHB 2, YHC 2 and YQC 2 series have not been standardized either nationally or internationally, but are common in the marketplace.

The dimensions of the adapter sleeves in the H 23 series, which are normally used to locate YSA 2-2FK bearings onto the shaft, are in accordance with ISO 2982-1:1995.

Tolerances

The bore and outside diameter of Y-bearings are produced to tolerances indicated in **table 1**. Symbols used are explained in the following.

The values specified for the tolerance zone of the bore diameter of bearings in the YAT 2, YAR 2, YET 2 and YEL 2 series are slightly tighter than Normal tolerances listed in ISO 9628:2006.

The values specified for bearings in the 17262(00)-2RS1 and 17263(00)-2RS1 series are in accordance with ISO 492:2002.

SKF manufactures bearings in the YSA 2-2FK series with a tapered bore, taper 1:12. They are designed to fit adapter sleeves in the H 23 series, for metric and inch shafts.

The hexagonal or square bore of bearings in the YHB 2, YHC 2 and YQC 2 series is produced to a 0/+0,25 mm tolerance.

Symbols

d	Nominal bore diameter
Δ_{dmp}	Deviation of the mean bore diameter from the nominal
D	Nominal outside diameter
Δ_{Dmp}	Deviation of the mean outside diameter from the nominal

Table 1

Tolerances for SKF Y-bearings

Nominal diameter		**Inner ring** Bearings in the series YAT 2, YAR 2, YET 2, YEL 2		17262(00) 17263(00)		**Outer ring** All bearings	
d, D		**Δ_{dmp}**		**Δ_{dmp}**		**Δ_{Dmp}**	
Over	Incl.	High	Low	High	Low	High	Low
mm		µm		µm		µm	
10	**18**	+15	+5	0	–8	–	–
18	**31,75**	+18	+5	0	–10	–	–
31,75	**50,8**	+19	+5	0	–12	0	–10
50,8	**80,962**	+21	+5	0	–15	0	–10
80,962	**120**	+25	+5	–	–	0	–15
120	**150**	–	–	–	–	0	–15
150	**180**	–	–	–	–	0	–20

Radial internal clearance

Y-bearings are manufactured as standard with the radial internal clearance indicated in **table 2**. The values specified there for bearings in the:

- YAT, YAR, YET, YEL, YHB, YHC and YQC series are in accordance with Group N radial internal clearances as listed ISO 9628:2006
- YSA 2 K series are in accordance with Group 3 radial internal clearances as listed in ISO 9628:2006
- 17262(00)-2RS1 and 17263(00)-2RS1 series are manufactured with Normal radial internal clearances for deep groove ball bearings as standard. The values are in accordance with ISO 5753:1991

Table 2

Radial internal clearance for Y-bearings

Bearing size[1]		Radial internal clearance of Y-bearings in the series					
		YAT 2, YAR 2, YET 2, YEL 2 YHC 2		YSA 2 K		17262 (00) 17263(00)	
from	to	min	max	min	max	min	max
–		µm					
03	**03**	10	25	–	–	3	18
04	**04**	12	28	–	–	5	20
05	**06**	12	28	23	41	5	20
07	**08**	13	33	28	46	6	20
09	**10**	14	36	30	51	6	23
11	**13**	18	43	38	61	8	28
14	**16**	20	51	–	–	–	–
17	**20**	24	58	–	–	–	–

[1] For example: bearing size 06 includes all bearings based on a Y 206 bearing, such as YAR 206-101-2F, YAR 206-102-2F, YAR 206-2F, YAR 206-103-2F, YAR 206-104-2F

Cages

All standard Y-bearings are fitted with an injection moulded snap-type cage of glass fibre reinforced polyamide 66 (→ **fig. 20**). These cages exhibit excellent performance characteristics in a variety of applications where operating temperatures do not exceed 120 °C.

The lubricants generally used for Y-bearings do not have any detrimental effect on cage properties.

Fig. 20



Grease fills

All standard design SKF Y-bearings and Y-bearings with a square bore are filled with a high quality, long lasting grease containing a lithium-calcium thickener with a consistency of 2 on the NLGI scale.

Y-bearings made of stainless steel, in the YAR 2-2RF/HV series, and Y-bearings with zinc-coated rings, in the YAR 2-2RF/VE495 series, meet the demands of food-processing machinery in a corrosive environment. They are filled with a non-toxic, food-grade grease based on a synthetic hydrocarbon oil using an aluminium-complex soap as a thickener.

Y-bearings with a hexagonal bore are filled with a premium quality, mineral oil based grease using a lithium-complex soap (designation suffix VT357). The grease, which has a consistency of 3 on the NGLI scale, has good water and corrosion resistant properties and provides excellent lubrication at high operating temperatures.

For additional information about lubrication and different lubricants, refer to the section *Lubrication and maintenance*, starting on **page 48**.

Mounting

The mounting procedures for Y-bearings depend on the method used to attach the unit to the shaft. The procedures are described in detail in the section *Mounting instructions*, starting on **page 52**.

Y-bearings with a standard inner ring are mounted on the shaft with an interference fit.

Y-bearings with grub screws, metric shafts
d **12 – 100** mm

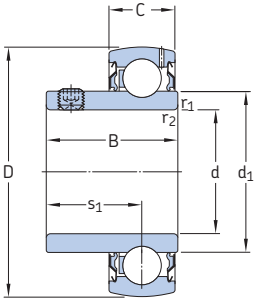

YAT

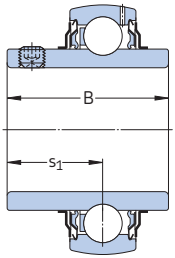

YAR-2F

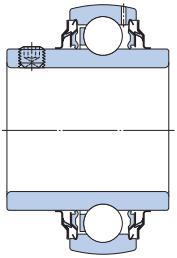

YAR-2RF

Dimensions							Basic load ratings dynamic	static	Fatigue load limit	Limiting speed with shaft tolerance h6	Mass	Designation
d	D	B	C	d_1	s_1	$r_{1,2}$ min	C	C_0	P_u			
mm							kN		kN	r/min	kg	–
12	40	27,4	12	24,2	15,9	0,3	9,56	4,75	0,2	9 500	0,11	**YAR 203/12-2F**
15	40	27,4	12	24,2	15,9	0,3	9,56	4,75	0,2	9 500	0,10	**YAR 203/15-2F**
17	40	22,1	12	24,2	15,9	0,3	9,56	4,75	0,2	9 500	0,07	**YAT 203**
	40	27,4	12	24,2	15,9	0,3	9,56	4,75	0,2	9 500	0,09	**YAR 203-2F**
20	47	25,5	14	28,2	18,3	0,6	12,7	6,55	0,28	8 500	0,11	**YAT 204**
	47	31	14	28,2	18,3	0,6	12,7	6,55	0,28	8 500	0,14	**YAR 204-2F**
	47	31	14	28,2	18,3	0,6	12,7	6,55	0,28	5 000	0,14	**YAR 204-2RF**
	47	31	14	28,2	18,3	0,6	10,8	6,55	0,28	5 000	0,14	**YAR 204-2RF/HV**
	47	31	14	28,2	18,3	0,6	12,7	6,55	0,28	5 000	0,14	**YAR 204-2RF/VE495**
25	52	27,2	15	33,7	19,5	0,6	14	7,8	0,335	7 000	0,14	**YAT 205**
	52	34,1	15	33,7	19,8	0,6	14	7,8	0,335	7 000	0,17	**YAR 205-2F**
	52	34,1	15	33,7	19,8	0,6	14	7,8	0,335	4 300	0,17	**YAR 205-2RF**
	52	34,1	15	33,7	19,8	0,6	11,9	7,8	0,335	4 300	0,18	**YAR 205-2RF/HV**
	52	34,1	15	33,7	19,8	0,6	14	7,8	0,335	4 300	0,18	**YAR 205-2RF/VE495**
30	62	30,2	18	39,7	21	0,6	19,5	11,2	0,475	6 300	0,23	**YAT 206**
	62	38,1	18	39,7	22,2	0,6	19,5	11,2	0,475	6 300	0,28	**YAR 206-2F**
	62	38,1	18	39,7	22,2	0,6	19,5	11,2	0,475	3 800	0,28	**YAR 206-2RF**
	62	38,1	18	39,7	22,2	0,6	16,3	11,2	0,475	3 800	0,29	**YAR 206-2RF/HV**
	62	38,1	18	39,7	22,2	0,6	19,5	11,2	0,475	3 800	0,29	**YAR 206-2RF/VE495**
35	72	33	19	46,1	23,3	1	25,5	15,3	0,655	5 300	0,31	**YAT 207**
	72	42,9	19	46,1	25,4	1	25,5	15,3	0,655	5 300	0,41	**YAR 207-2F**
	72	42,9	19	46,1	25,4	1	25,5	15,3	0,655	3 200	0,41	**YAR 207-2RF**
	72	42,9	19	46,1	25,4	1	21,6	15,3	0,655	3 800	0,42	**YAR 207-2RF/HV**
	72	42,9	19	46,1	25,4	1	25,5	15,3	0,655	3 800	0,42	**YAR 207-2RF/VE495**
40	80	36	21	51,8	25,3	1	30,7	19	0,8	4 800	0,43	**YAT 208**
	80	49,2	21	51,8	30,2	1	30,7	19	0,8	4 800	0,55	**YAR 208-2F**
	80	49,2	21	51,8	30,2	1	30,7	19	0,8	2 800	0,55	**YAR 208-2RF**
	80	49,2	21	51,8	30,2	1	24,7	19	0,8	2 800	0,56	**YAR 208-2RF/HV**
	80	49,2	21	51,8	30,2	1	30,7	19	0,8	2 800	0,56	**YAR 208-2RF/VE495**
45	85	37	22	56,8	25,8	1	33,2	21,6	0,915	4 300	0,48	**YAT 209**
	85	49,2	22	56,8	30,2	1	33,2	21,6	0,915	4 300	0,60	**YAR 209-2F**
	85	49,2	22	56,8	30,2	1	33,2	21,6	0,915	2 400	0,60	**YAR 209-2RF**

Dimensions							Basic load ratings		Fatigue load limit	Limiting speed	Mass	Designation
							static			with shaft tolerance h6		
d	D	B	C	d_1	s_1	$r_{1,2}$ min	C	C_0	P_u			
mm							kN		kN	r/min	kg	–
50	90	38,8	22	62,5	27,6	1	35,1	23,2	0,98	4 000	0,54	**YAT 210**
	90	51,6	22	62,5	32,6	1	35,1	23,2	0,98	4 000	0,69	**YAR 210-2F**
	90	51,6	22	62,5	32,6	1	35,1	23,2	0,98	2 200	0,69	**YAR 210-2RF**
	90	51,6	22	62,5	32,6	1	29,6	23,2	0,98	2 200	0,69	**YAR 210-2RF/HV**
	90	51,6	22	62,5	32,6	1	35,1	23,2	0,98	2 200	0,69	**YAR 210-2RF/VE495**
55	100	55,6	25	69,1	33,4	1	43,6	29	1,25	3 600	0,94	**YAR 211-2F**
	100	55,6	25	69,1	33,4	1	43,6	29	1,25	1 900	0,94	**YAR 211-2RF**
60	110	65,1	26	75,6	39,7	1,5	52,7	36	1,53	3 400	1,30	**YAR 212-2F**
	110	65,1	26	75,6	39,7	1,5	52,7	36	1,53	1 800	1,30	**YAR 212-2RF**
65	120	68,3	27	82,5	42,9	1,5	57,2	40	1,7	3 000	1,70	**YAR 213-2F**
	120	68,3	27	82,5	42,9	1,5	57,2	40	1,7	1 600	1,70	**YAR 213-2RF**
70	125	69,9	28	87	39,7	1,5	62,4	45	1,86	2 800	1,85	**YAR 214-2F**
75	130	73,3	29	92	46,1	1,5	66,3	49	2,04	2 600	2,05	**YAR 215-2F**
80	140	77,9	30	97,4	47,7	2	72,8	53	2,16	2 400	2,45	**YAR 216-2F**
85	150	81	34	105	50,8	2	83,2	62	2,4	2 200	3,20	**YAR 217-2F**
90	160	89	36	112,5	54	2	95,6	72	2,7	2 000	4,00	**YAR 218-2F**
100	180	98,4	40	124,5	63,4	2	124	93	3,35	1 900	5,25	**YAR 220-2F**

Y-bearings with grub screws, inch shafts
d **1/2 – 1 7/16** in

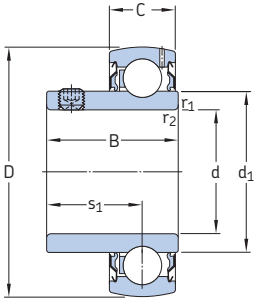

YAT

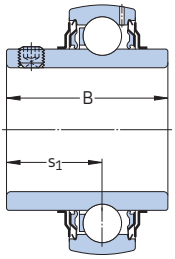

YAR-2F

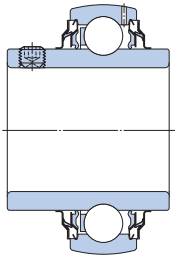

YAR-2RF

Dimensions							Basic load ratings dynamic	static	Fatigue load limit	Limiting speed with shaft tolerance h6	Mass	Designation
d	D	B	C	d_1	s_1	$r_{1,2}$ min	C	C_0	P_u			
in/*mm*							lbf/*kN*		lbf/*kN*	r/min	lb/*kg*	–
1/2	1.5748	1.08	0.47	0.95	0.63	0.01	2 150	1 070	50	9 500	0.27	**YAR 203-008-2F**
12,7	*40*	*27,4*	*12*	*24,2*	*15,9*	*0,3*	*9,56*	*4,75*	*0,2*		*0,12*	
5/8	1.5748	1.08	0.47	0.95	0.63	0.01	2 150	1 070	50	9 500	0.23	**YAR 203-010-2F**
15,875	*40*	*27,4*	*12*	*24,2*	*15,9*	*0,3*	*9,56*	*4,75*	*0,2*		*0,11*	
	1.5748	0.89	0.47	0.95	0.63	0.01	2 150	1 070	50	9 500	0.21	**YAT 203-010**
	40	*22,5*	*12*	*24,2*	*16*	*0,3*	*9,56*	*4,75*	*0,2*		*0,10*	
3/4	1.8504	1.22	0.55	1.11	0.72	0.02	2 860	1 470	60	8 500	0.36	**YAR 204-012-2F**
19,05	*47*	*31*	*14*	*28,2*	*18,3*	*0,6*	*12,7*	*6,55*	*0,28*		*0,17*	
	1.8504	1.22	0.55	1.11	0.72	0.02	2 860	1 470	60	5 000	0.36	**YAR 204-012-2RF**
	47	*31*	*14*	*28,2*	*18,3*	*0,6*	*12,7*	*6,55*	*0,28*		*0,16*	
	1.8504	1.22	0.55	1.11	0.72	0.02	2 860	1 470	60	8 500	0.34	**YAR 204-012-2F/AH**
	47	*31*	*14*	*28,2*	*18,3*	*0,6*	*12,7*	*6,55*	*0,28*		*0,16*	
	1.8504	1.22	0.55	1.11	0.72	0.02	2 430	1 470	60	5 000	0.36	**YAR 204-012-2RF/HV**
	47	*31*	*14*	*28,2*	*18,3*	*0,6*	*10,8*	*6,55*	*0,28*		*0,16*	
	1.8504	1.00	0.55	1.11	0.72	0.02	2 860	1 470	60	8 500	0.31	**YAT 204-012**
	47	*25,5*	*14*	*28,2*	*18,3*	*0,6*	*12,7*	*6,55*	*0,28*		*0,14*	
7/8	2.0472	1.07	0.59	1.33	0.77	0.02	3 150	1 760	80	7 000	0.37	**YAT 205-014**
22,225	*52*	*27,2*	*15*	*33,7*	*19,5*	*0,6*	*14*	*7,8*	*0,335*		*0,17*	
15/16	2.0472	1.34	0.59	1.33	0.78	0.02	3 150	1 760	80	7 000	0.47	**YAR 205-015-2F**
23,813	*52*	*34,1*	*15*	*33,7*	*19,8*	*0,6*	*14*	*7,8*	*0,335*		*0,21*	
	2.0472	1.07	0.59	1.33	0.77	0.02	3 150	1 760	80	7 000	0.40	**YAT 205-015**
	52	*27,2*	*15*	*33,7*	*19,5*	*0,6*	*14*	*7,8*	*0,335*		*0,18*	
1	2.0472	1.34	0.59	1.33	0.78	0.02	3 150	1 760	80	7 000	0.43	**YAR 205-100-2F**
25,4	*52*	*34,1*	*15*	*33,7*	*19,8*	*0,6*	*14*	*7,8*	*0,335*		*0,19*	
	2.0472	1.34	0.59	1.33	0.78	0.02	3 150	1 760	80	4 300	0.43	**YAR 205-100-2RF**
	52	*34,1*	*15*	*33,7*	*19,8*	*0,6*	*14*	*7,8*	*0,335*		*0,19*	
	2.0472	1.34	0.59	1.33	0.78	0.02	3 150	1 760	80	7 000	0.43	**YAR 205-100-2F/AH**
	52	*34,1*	*15*	*33,7*	*19,8*	*0,6*	*14*	*7,8*	*0,335*		*0,19*	
	2.0472	1.34	0.59	1.33	0.78	0.02	2 680	1 760	80	4 300	0.43	**YAR 205-100-2RF/HV**
	52	*34,1*	*15*	*33,7*	*19,8*	*0,6*	*11,9*	*7,8*	*0,335*		*0,19*	
	2.0472	1.07	0.59	1.33	0.77	0.02	3 150	1 760	80	7 000	0.36	**YAT 205-100**
	52	*27,2*	*15*	*33,7*	*19,5*	*0,6*	*14*	*7,8*	*0,335*		*0,16*	
1 1/16	2.4409	1.50	0.71	1.56	0.87	0.02	4 390	2 520	110	6 300	0.76	**YAR 206-101-2F**
26,988	*62*	*38,1*	*18*	*39,7*	*22,2*	*0,6*	*19,5*	*11,2*	*0,475*		*0,34*	

Dimensions							Basic load ratings dynamic	static	Fatigue load limit	Limiting speed with shaft tolerance h6	Mass	Designation
d	D	B	C	d_1	s_1	$r_{1,2}$ min	C	C_0	P_u			
in/*mm*							lbf/*kN*		lbf/*kN*	r/min	lb/*kg*	–
1 1/8	2.4409	1.50	0.71	1.56	0.87	0.02	4 390	2 520	110	6 300	0.76	**YAR 206-102-2F**
28,575	*62*	*38,1*	*18*	*39,7*	*22,2*	*0,6*	*19,5*	*11,2*	*0,475*		*0,34*	
1 3/16	2.4409	1.50	0.71	1.56	0.87	0.02	4 390	2 520	110	6 300	0.68	**YAR 206-103-2F**
30,163	*62*	*38,1*	*18*	*39,7*	*22,2*	*0,6*	*19,5*	*11,2*	*0,475*		*0,31*	
	2.4409	1.50	0.71	1.56	0.87	0.02	4 390	2 520	110	6 300	0.68	**YAR 206-103-2F/AH**
	62	*38,1*	*18*	*39,7*	*22,2*	*0,6*	*19,5*	*11,2*	*0,475*		*0,31*	
	2.4409	1.22	0.71	1.56	0.87	0.04	4 390	2 520	110	6 300	0.62	**YAT 206-103**
	62	*31*	*18*	*39,7*	*22*	*1*	*19,5*	*11,2*	*0,475*		*0,28*	
	2.4409	1.5	0.71	1.56	0.87	0.02	3 670	2 520	110	3 800	0.64	**YAR 206-103-2RF/HV**
	62	*38,1*	*18*	*39,7*	*22,2*	*0,6*	*16,3*	*11,2*	*0,475*		*0,29*	
1 1/4	2.4409	1.50	0.71	1.56	0.87	0.02	4 390	2 520	110	6 300	0.62	**YAR 206-104-2F**
31,75	*62*	*38,1*	*18*	*39,7*	*22,2*	*0,6*	*19,5*	*11,2*	*0,475*		*0,28*	
	2.8346	1.69	0.75	1.82	1.00	0.04	5 740	3 440	150	5 300	1.15	**YAR 207-104-2F**
	72	*42,9*	*19*	*46,1*	*25,4*	*1*	*25,5*	*15,3*	*0,655*		*0,52*	
	2.8346	1.69	0.75	1.82	1.00	0.04	5 740	3 440	150	3 200	1.00	**YAR 207-104-2RF**
	72	*42,9*	*19*	*46,1*	*25,4*	*1*	*25,5*	*15,3*	*0,655*		*0,46*	
	2.8346	1.69	0.75	1.82	1.00	0.04	4 860	3 440	150	3 800	1.15	**YAR 207-104-2RF/HV**
	72	*42,9*	*19*	*46,1*	*25,4*	*1*	*21,6*	*15,3*	*0,655*		*0,52*	
	2.4409	1.22	0.71	1.56	0.87	0.04	4 390	2 520	110	6 300	0.61	**YAT 206-104**
	62	*31*	*18*	*39,7*	*22*	*1*	*19,5*	*11,2*	*0,475*		*0,28*	
1 5/16	2.8346	1.69	0.75	1.82	1.00	0.04	5 740	3 440	150	5 300	1.05	**YAR 207-105-2F**
33,338	*72*	*42,9*	*19*	*46,1*	*25,4*	*1*	*25,5*	*15,3*	*0,655*		*0,48*	
1 3/8	2.8346	1.69	0.75	1.82	1.00	0.04	5 740	3 440	150	5 300	1.00	**YAR 207-106-2F**
34,925	*72*	*42,9*	*19*	*46,1*	*25,4*	*1*	*25,5*	*15,3*	*0,655*		*0,46*	
	2.8346	1.69	0.75	1.81	1	0.04	4 860	3 440	150	3 800	0.93	**YAR 207-106-2RF/HV**
	72	*42,9*	*19*	*46,1*	*25,4*	*1*	*21,6*	*15,3*	*0,655*		*0,42*	
1 7/16	2.8346	1.69	0.75	1.82	1.00	0.04	5 740	3 440	150	5 300	0.93	**YAR 207-107-2F**
36,513	*72*	*42,9*	*19*	*46,1*	*25,4*	*1*	*25,5*	*15,3*	*0,655*		*0,42*	
	2.8346	1.69	0.75	1.82	1.00	0.04	4 860	3 440	150	3 800	0.95	**YAR 207-107-2RF/HV**
	72	*42,9*	*19*	*46,1*	*25,4*	*1*	*21,6*	*15,3*	*0,655*		*0,43*	
	3.1496	1.94	0.83	2.04	1.19	0.04	6 910	4 280	180	4 800	1.55	**YAR 208-107-2F**
	80	*49,2*	*21*	*51,8*	*30,2*	*1*	*30,7*	*19*	*0,8*		*0,70*	
	2.8346	1.38	0.75	1.82	1.00	0.04	5 740	3 440	150	5 300	0.83	**YAT 207-107**
	72	*35*	*19*	*46,1*	*25,5*	*1*	*25,5*	*15,3*	*0,655*		*0,38*	

Y-bearings with grub screws, inch shafts
d **1 1/2 – 2 15/16** in

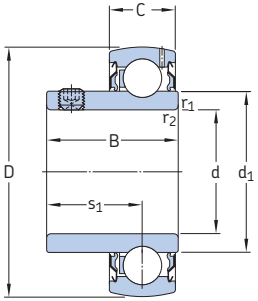

YAT

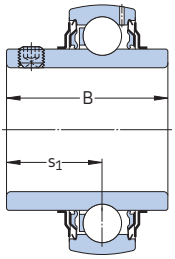

YAR-2F

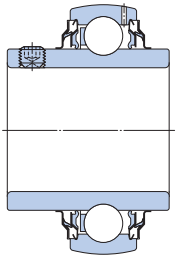

YAR-2RF

Dimensions							Basic load ratings dynamic	static	Fatigue load limit	Limiting speed with shaft tolerance h6	Mass	Designation
d	D	B	C	d_1	s_1	$r_{1,2}$ min	C	C_0	P_u			
in/*mm*							lbf/*kN*		lbf/*kN*	r/min	lb/*kg*	–
1 1/2	3.1496	1.94	0.83	2.04	1.19	0.04	6 910	4 280	180	4 800	1.30	**YAR 208-108-2F**
38,1	*80*	*49,2*	*21*	*51,8*	*30,2*	*1*	*30,7*	*19*	*0,8*		*0,59*	
	3.1496	1.94	0.83	2.04	1.19	0.04	6 910	4 280	180	2 800	1.30	**YAR 208-108-2RF**
	80	*49,2*	*21*	*51,8*	*30,2*	*1*	*30,7*	*19*	*0,8*		*0,59*	
	3.3465	1.94	0.87	2.24	1.19	0.04	7 470	4 860	210	4 300	1.89	**YAR 209-108-2F**
	85	*49,2*	*22*	*56,8*	*30,2*	*1*	*33,2*	*21,6*	*0,915*		*0,86*	
	3.1496	1.57	0.83	2.04	1.12	0.04	6 910	4 280	180	4 800	1.29	**YAT 208-108**
	80	*40*	*21*	*51,8*	*28,5*	*1*	*30,7*	*19*	*0,8*		*0,58*	
	3.1496	1.94	0.83	2.04	1.19	0.04	5 560	4 280	180	2 800	1.25	**YAR 208-108-2RF/HV**
	80	*49,2*	*21*	*51,8*	*30,2*	*1*	*24,7*	*19*	*0,8*		*0,56*	
1 9/16	3.1496	1.94	0.83	2.04	1.19	0.04	6 910	4 280	180	4 300	1.40	**YAR 208-109-2F**
39,688	*80*	*49,2*	*21*	*51,8*	*30,2*	*1*	*30,7*	*19*	*0,8*		*0,64*	
1 5/8	3.3465	1.94	0.87	2.24	1.19	0.04	7 470	4 860	210	4 300	1.75	**YAR 209-110-2F**
41,275	*85*	*49,2*	*22*	*56,8*	*30,2*	*1*	*33,2*	*21,6*	*0,915*		*0,79*	
1 11/16	3.3465	1.94	0.87	2.24	1.19	0.04	7 470	4 860	210	4 300	1.65	**YAR 209-111-2F**
42,863	*85*	*49,2*	*22*	*56,8*	*30,2*	*1*	*33,2*	*21,6*	*0,915*		*0,75*	
	3.3465	1.63	0.87	2.24	1.20	0.04	7 470	4 860	210	4 300	1.40	**YAT 209-111**
	85	*41,5*	*22*	*56,8*	*30,5*	*1*	*33,2*	*21,6*	*0,915*		*0,65*	
1 3/4	3.3465	1.94	0.87	2.24	1.19	0.04	7 470	4 860	210	4 300	1.35	**YAR 209-112-2F**
44,45	*85*	*49,2*	*22*	*56,8*	*30,2*	*1*	*33,2*	*21,6*	*0,915*		*0,62*	
	3.3465	1.94	0.87	2.24	1.19	0.04	7 470	4 860	210	2 400	1.35	**YAR 209-112-2RF**
	85	*49,2*	*22*	*56,8*	*30,2*	*1*	*33,2*	*21,6*	*0,915*		*0,62*	
	3.3465	1.63	0.87	2.24	1.20	0.04	7 470	4 860	210	4 300	1.35	**YAT 209-112**
	85	*41,5*	*22*	*56,8*	*30,5*	*1*	*33,2*	*21,6*	*0,915*		*0,60*	
1 15/16	3.5433	2.03	0.87	2.46	1.28	0.04	7 900	5 220	220	4 000	1.70	**YAR 210-115-2F**
49,213	*90*	*51,6*	*22*	*62,5*	*32,6*	*1*	*35,1*	*23,2*	*0,98*		*0,78*	
	3.5433	2.03	0.87	2.46	1.28	0.04	7 900	5 220	220	2 200	1.70	**YAR 210-115-2RF**
	90	*51,6*	*22*	*62,5*	*32,6*	*1*	*35,1*	*23,2*	*0,98*		*0,78*	
	3.5433	2.03	0.87	2.46	1.28	0.04	6 660	5 220	220	2 200	1.70	**YAR 210-115-2RF/HV**
	90	*51,6*	*22*	*62,5*	*32,6*	*1*	*29,6*	*23,2*	*0,98*		*0,78*	
	3.5433	2.03	0.87	2.46	1.28	0.04	7 900	5 220	220	2 200	1.70	**YAR 210-115-2RF/VE495**
	90	*51,6*	*22*	*62,5*	*32,6*	*1*	*35,1*	*23,2*	*0,98*		*0,78*	
	3.5433	1.69	0.87	2.46	1.26	0.04	7 900	5 220	220	4 000	1.50	**YAT 210-115**
	90	*43*	*22*	*62,5*	*32*	*1*	*35,1*	*23,2*	*0,98*		*0,67*	

Dimensions							Basic load ratings		Fatigue load limit	Limiting speed	Mass	Designation
							dynamic	static		with shaft tolerance		
d	D	B	C	d_1	s_1	$r_{1,2}$ min	C	C_0	P_u	h6		
in/*mm*							lbf/*kN*		lbf/*kN*	r/min	lb/*kg*	–
2	3.9370	2.19	0.98	2.72	1.32	0.04	9 810	6 530	280	3 600	2.45	**YAR 211-200-2F**
50,8	*100*	*55,6*	*25*	*69,1*	*33,4*	*1*	*43,6*	*29*	*1,25*		*1,10*	
	3.9370	2.19	0.98	2.72	1.32	0.04	9 810	6 530	280	1 900	2.45	**YAR 211-200-2RF**
	100	*55,6*	*25*	*69,1*	*33,4*	*1*	*43,6*	*29*	*1,25*		*1,10*	
	3.9370	1.77	0.98	2.72	1.28	0.04	9 810	6 530	280	3 600	2.30	**YAT 211-200**
	100	*45*	*25*	*69,1*	*32,5*	*1*	*43,6*	*29*	*1,25*		*1,05*	
2 3/16	3.9370	2.19	0.98	2.72	1.32	0.04	9 810	6 530	280	3 600	2.30	**YAR 211-203-2F**
55,563	*100*	*55,6*	*25*	*69,1*	*33,4*	*1*	*43,6*	*29*	*1,25*		*1,05*	
	3.9370	2.19	0.98	2.72	1.32	0.04	9 810	6 530	280	3 600	2.30	**YAR 211-203-2F/AH**
	100	*55,6*	*25*	*69,1*	*33,4*	*1*	*43,6*	*29*	*1,25*		*1,05*	
	4.3307	2.56	1.02	2.98	1.56	0.06	11 860	8 100	340	3 400	3.75	**YAR 212-203-2F**
	110	*65,1*	*26*	*75,6*	*39,7*	*1,5*	*52,7*	*36*	*1,53*		*1,70*	
2 1/4	4.3307	2.56	1.02	2.98	1.56	0.06	11 860	8 100	340	3 400	3.55	**YAR 212-204-2F**
57,15	*110*	*65,1*	*26*	*75,6*	*39,7*	*1,5*	*52,7*	*36*	*1,53*		*1,60*	
	4.3307	1.91	1.02	2.98	1.38	0.06	11 860	8 100	340	3 400	2.75	**YAT 212-204**
	110	*48,5*	*26*	*75,6*	*35*	*1,5*	*52,7*	*36*	*1,53*		*1,25*	
2 7/16	4.3307	2.56	1.02	2.98	1.56	0.06	11 860	8 100	340	3 400	3.00	**YAR 212-207-2F**
61,913	*110*	*65,1*	*26*	*75,6*	*39,7*	*1,5*	*52,7*	*36*	*1,53*		*1,35*	
	4.3307	1.91	1.02	2.98	1.38	0.06	11 860	8 100	340	3 400	2.75	**YAT 212-207**
	110	*48,5*	*26*	*75,6*	*35*	*1,5*	*52,7*	*36*	*1,53*		*1,25*	
	4.9213	2.75	1.10	3.43	1.56	0.06	14 040	9 900	420	2 800	5.40	**YAR 214-207-2F**
	125	*69,93*	*28*	*87*	*39,7*	*1,5*	*62,4*	*44*	*1,86*		*2,45*	
2 1/2	4.7244	2.69	1.06	3.25	1.69	0.06	12 870	9 000	380	3 000	4.20	**YAR 213-208-2F**
63,5	*120*	*68,3*	*27*	*82,5*	*42,9*	*1,5*	*57,2*	*40*	*1,7*		*1,90*	
	4.7244	2.69	1.06	3.25	1.69	0.06	12 870	9 000	380	1 600	4.20	**YAR 213-208-2RF**
	120	*68,3*	*27*	*82,5*	*42,9*	*1,5*	*57,2*	*40*	*1,7*		*1,90*	
	4.9213	2.75	1.10	3.43	1.56	0.06	14 040	9 900	420	2 800	5.30	**YAR 214-208-2F**
	125	*69,93*	*28*	*87*	*39,7*	*1,5*	*62,4*	*44*	*1,86*		*2,40*	
2 11/16	4.7244	2.69	1.06	3.25	1.69	0.06	12 870	9 000	380	3 000	3.75	**YAR 213-211-2F**
68,263	*120*	*68,3*	*27*	*82,5*	*42,9*	*1,5*	*57,2*	*40*	*1,7*		*1,70*	
2 15/16	5.1181	2.88	1.14	3.62	1.82	0.06	14 920	11 030	460	2 600	4.85	**YAR 215-215-2F**
74,613	*130*	*73,3*	*29*	*92*	*46,1*	*1,5*	*66,3*	*49*	*2,04*		*2,20*	
	5.1181	2.11	1.14	3.62	1.54	0.06	14 920	11 030	460	2 600	4.65	**YAT 215-215**
	130	*53,5*	*29*	*92*	*39*	*1,5*	*66,3*	*49*	*2,04*		*2,10*	

Y-bearings with grub screws, inch shafts
d **3** in

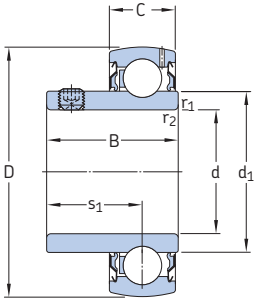

YAT

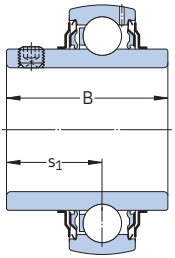

YAR-2F

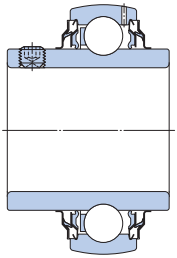

YAR-2RF

Dimensions							**Basic load ratings** dynamic	static	**Fatigue load limit**	**Limiting speed** with shaft tolerance	**Mass**	**Designation**
d	D	B	C	d_1	s_1	$r_{1,2}$ min	C	C_0	P_u	h6		
in/*mm*							lbf/*kN*		lbf/*kN*	r/min	lb/*kg*	–
3	5.5118	3.07	1.18	3.83	1.88	0.08	16 400	11 900	486	2 400	6.30	**YAR 216-300-2F**
76,2	*140*	*77,9*	*30*	*97,4*	*47,7*	*2*	*72,8*	*53*	*2,16*		*2,85*	
	5.5118	2.19	1.18	3.83	1.54	0.08	16 370	11 920	490	2 400	5.20	**YAT 216-300**
	140	*55,5*	*30*	*97,4*	*39*	*2*	*72,8*	*53*	*2,16*		*2,35*	

Y-bearings with an eccentric locking collar, metric shafts
d **15 – 60** mm

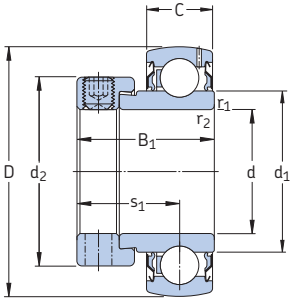

YET

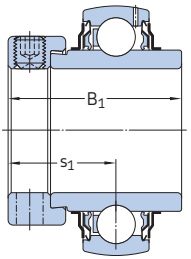

YEL-2F

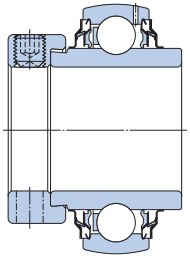

YEL-2RF/VL065

Dimensions								Basic load ratings dynamic	static	Fatigue load limit	Limiting speed with shaft tolerance h6	Mass	Designation
d	D	B_1	C	d_1	d_2	s_1	$r_{1,2}$ min	C	C_0	P_u			
mm								kN		kN	r/min	kg	–
15	40	28,6	12	24,2	27,2	22,1	0,3	9,56	4,75	0,2	9 500	0,12	**YET 203/15**
17	40	28,6	12	24,2	27,2	22,1	0,3	9,56	4,75	0,2	9 500	0,10	**YET 203**
20	47	31	14	28,2	32,4	23,5	0,6	12,7	6,55	0,28	8 500	0,18	**YET 204**
	47	31	14	28,2	32,4	23,5	0,6	12,7	6,55	0,28	8 500	0,18	**YET 204/VL065**
	47	43,7	14	28,2	32,4	26,6	0,6	12,7	6,55	0,28	8 500	0,19	**YEL 204-2F**
	47	43,7	14	28,2	32,4	26,6	0,6	12,7	6,55	0,28	5 000	0,19	**YEL 204-2RF/VL065**
25	52	31	15	33,7	37,4	23,5	0,6	14	7,8	0,335	7 000	0,18	**YET 205**
	52	31	15	33,7	37,4	23,5	0,6	14	7,8	0,335	7 000	0,18	**YET 205/VL065**
	52	44,4	15	33,7	37,4	26,9	0,6	14	7,8	0,335	7 000	0,24	**YEL 205-2F**
	52	44,4	15	33,7	37,4	26,9	0,6	14	7,8	0,335	4 300	0,24	**YEL 205-2RF/VL065**
30	62	35,7	18	39,7	44,1	26,7	0,6	19,5	11,2	0,475	6 300	0,30	**YET 206**
	62	35,7	18	39,7	44,1	26,7	0,6	19,5	11,2	0,475	6 300	0,30	**YET 206/VL065**
	62	48,4	18	39,7	44,1	30,1	0,6	19,5	11,2	0,475	6 300	0,36	**YEL 206-2F**
	62	48,4	18	39,7	44,1	30,1	0,6	19,5	11,2	0,475	3 900	0,36	**YEL 206-2RF/VL065**
35	72	38,9	19	46,1	51,1	29,4	1	25,5	15,3	0,655	5 300	0,44	**YET 207**
	72	38,9	19	46,1	51,1	29,4	1	25,5	15,3	0,655	5 300	0,44	**YET 207/VL065**
	72	51,1	19	46,1	51,1	32,3	1	25,5	15,3	0,655	5 300	0,55	**YEL 207-2F**
	72	51,1	19	46,1	51,1	32,3	1	25,5	15,3	0,655	3 200	0,55	**YEL 207-2RF/VL065**
40	80	43,7	21	51,8	56,5	32,7	1	30,7	19	0,8	4 800	0,59	**YET 208**
	80	43,7	21	51,8	56,5	32,7	1	30,7	19	0,8	4 800	0,59	**YET 208/VL065**
	80	56,3	21	51,8	56,5	34,9	1	30,7	19	0,8	4 800	0,67	**YEL 208-2F**
	80	56,3	21	51,8	56,5	34,9	1	30,7	19	0,8	2 800	0,67	**YEL 208-2RF/VL065**
45	85	43,7	22	56,8	62	32,7	1	33,2	21,6	0,915	4 300	0,65	**YET 209**
	85	56,3	22	56,8	62	34,9	1	33,2	21,6	0,915	4 300	0,74	**YEL 209-2F**
50	90	43,7	22	62,5	67,2	32,7	1	35,1	23,2	0,98	4 000	0,70	**YET 210**
	90	62,7	22	62,5	67,2	38,1	1	35,1	23,2	0,98	4 000	0,89	**YEL 210-2F**
55	100	48,4	25	69,1	74,5	36,4	1	43,6	29	1,25	3 600	0,90	**YET 211**
	100	71,4	25	69,1	74,5	43,6	1	43,6	29	1,25	3 600	1,20	**YEL 211-2F**
60	110	53,1	26	75,6	82	39,6	1,5	52,7	36	1,53	3 400	1,30	**YET 212**
	110	77,8	26	75,6	82	46,8	1,5	52,7	36	1,53	3 400	1,60	**YEL 212-2F**

Y-bearings with an eccentric locking collar, inch shafts
d **1/2 – 2 7/16** in

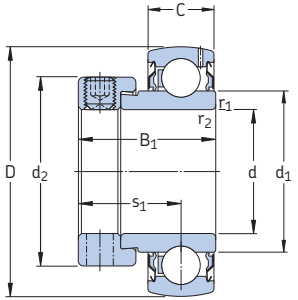

YET

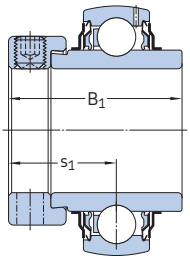

YEL-2F

Dimensions								Basic load ratings dynamic	static	Fatigue load limit	Limiting speed with shaft tolerance h6	Mass	Designation
d	D	B_1	C	d_1	d_2	s_1	$r_{1,2}$ min	C	C_0	P_u			
in/*mm*								lbf/*kN*		lbf/*kN*	r/min	lb/*kg*	–
1/2	1.5748	1.47	0.47	0.95	1.07	0.92	0.01	2 150	1 070	45	9 500	0.33	**YEL 203-008-2F**
12,7	*40*	*37,3*	*12*	*24,2*	*27,2*	*23,4*	*0,3*	*9,56*	*4,75*	*0,2*		*0,15*	
	1.5748	1.13	0.47	0.95	1.07	0.87	0.01	2 150	1 070	50	9 500	0.29	**YET 203-008**
	40	*28,6*	*12*	*24,2*	*27,2*	*22,1*	*0,3*	*9,56*	*4,75*	*0,2*		*0,13*	
3/4	1.8504	1.72	0.55	1.11	1.28	1.05	0.02	2 860	1 470	60	8 500	0.44	**YEL 204-012-2F**
19,05	*47*	*43,7*	*14*	*28,2*	*32,4*	*26,6*	*0,6*	*12,7*	*6,55*	*0,28*		*0,20*	
	1.8504	1.22	0.55	1.11	1.28	0.93	0.02	2 860	1 470	60	8 500	0.38	**YET 204-012**
	47	*31*	*14*	*28,2*	*32,4*	*23,5*	*0,6*	*12,7*	*6,55*	*0,28*		*0,17*	
1	2.0472	1.22	0.59	1.33	1.47	0.93	0.02	3 150	1 760	80	7 000	0.40	**YET 205-100**
25,4	*52*	*31*	*15*	*33,7*	*37,4*	*23,5*	*0,6*	*14*	*7,8*	*0,335*		*0,18*	
	2.0472	1.75	0.59	1.33	1.47	1.06	0.02	3 150	1 760	80	7 000	0.53	**YEL 205-100-2F**
	52	*44,4*	*15*	*33,7*	*37,4*	*26,9*	*0,6*	*14*	*7,8*	*0,335*		*0,24*	
1 1/8	2.4409	1.91	0.71	1.56	1.74	1.19	0.02	4 390	2 520	110	6 300	0.86	**YEL 206-102-2F**
28,575	*62*	*48,4*	*18*	*39,7*	*44,1*	*30,1*	*0,6*	*19,5*	*11,2*	*0,475*		*0,39*	
	2.4409	1.41	0.71	1.56	1.74	1.05	0.02	4 390	2 520	110	6 300	0.73	**YET 206-102**
	62	*35,7*	*18*	*39,7*	*44,1*	*26,7*	*0,6*	*19,5*	*11,2*	*0,475*		*0,33*	
1 3/16	2.4409	1.91	0.71	1.56	1.74	1.19	0.02	4 390	2 520	110	6 300	0.82	**YEL 206-103-2F**
30,163	*62*	*48,4*	*18*	*39,7*	*44,1*	*30,1*	*0,6*	*19,5*	*11,2*	*0,475*		*0,37*	
	2.4409	1.41	0.71	1.56	1.74	1.05	0.02	4 390	2 520	110	6 300	0.68	**YET 206-103**
	62	*35,7*	*18*	*39,7*	*44,1*	*26,7*	*0,6*	*19,5*	*11,2*	*0,475*		*0,31*	
1 1/4	2.8346	2.01	0.75	1.82	2.01	1.27	0.04	5 740	3 440	150	5 300	1.30	**YEL 207-104-2F**
31,75	*72*	*51,1*	*19*	*46,1*	*51,1*	*32,3*	*1*	*25,5*	*15,3*	*0,655*		*0,60*	
	2.4409	1.41	0.71	1.56	1.74	1.05	0.02	4 390	2 520	110	6 300	0.64	**YET 206-104**
	62	*35,7*	*18*	*39,7*	*44,1*	*26,7*	*0,6*	*19,5*	*11,2*	*0,475*		*0,29*	
	2.8346	1.53	0.75	1.82	2.01	1.16	0.04	5 740	3 440	150	5 300	1.10	**YET 207-104**
	72	*38,9*	*19*	*46,1*	*51,1*	*29,4*	*1*	*25,5*	*15,3*	*0,655*		*0,51*	
1 5/16	2.8346	1.53	0.75	1.82	2.01	1.16	0.04	5 740	3 440	150	5 300	1.25	**YET 207-105**
33,338	*72*	*38,9*	*19*	*46,1*	*51,1*	*29,4*	*1*	*25,5*	*15,3*	*0,655*		*0,56*	
1 3/8	2.8346	2.01	0.75	1.82	2.01	1.27	0.04	5 740	3 440	150	5 300	1.20	**YEL 207-106-2F**
34,925	*72*	*51,1*	*19*	*46,1*	*51,1*	*32,3*	*1*	*25,5*	*15,3*	*0,655*		*0,55*	
	2.8346	1.53	0.75	1.82	2.01	1.16	0.04	5 740	3 440	150	5 300	1.05	**YET 207-106**
	72	*38,9*	*19*	*46,1*	*51,1*	*29,4*	*1*	*25,5*	*15,3*	*0,655*		*0,47*	

Dimensions								Basic load ratings		Fatigue load limit	Limiting speed	Mass	Designation
d	D	B_1	C	d_1	d_2	s_1	$r_{1,2}$ min	dynamic C	static C_0	P_u	with shaft tolerance h6		
in/*mm*								lbf/*kN*		lbf/*kN*	r/min	lb/*kg*	–
1 7/16	2.8346	2.01	0.75	1.82	2.01	1.27	0.04	5 740	3 440	150	5 300	1.15	**YEL 207-107-2F**
36,513	*72*	*51,1*	*19*	*46,1*	*51,1*	*32,3*	*1*	*25,5*	*15,3*	*0,655*		*0,53*	
	2.8346	1.53	0.75	1.82	2.01	1.16	0.04	5 740	3 440	150	5 300	1.97	**YET 207-107**
	72	*38,9*	*19*	*46,1*	*51,1*	*29,4*	*1*	*25,5*	*15,3*	*0,655*		*0,44*	
1 1/2	3.1496	1.72	0.83	2.04	2.22	1.29	0.04	6 910	4 280	180	4 800	1.40	**YET 208-108**
38,1	*80*	*43,7*	*21*	*51,8*	*56,5*	*32,7*	*1*	*30,7*	*19*	*0,8*		*0,63*	
	3.1496	2.22	0.83	2.04	2.22	1.37	0.04	6 910	4 280	180	4 800	1.70	**YEL 208-108-2F**
	80	*56,3*	*21*	*51,8*	*56,5*	*34,9*	*1*	*30,7*	*19*	*0,8*		*0,77*	
1 11/16	3.3465	2.22	0.87	2.24	2.44	1.37	0.04	7 470	4 860	210	4 300	1.95	**YEL 209-111-2F**
42,863	*85*	*56,3*	*22*	*56,8*	*62*	*34,9*	*1*	*33,2*	*21,6*	*0,915*		*0,88*	
	3.3465	1.72	0.87	2.24	2.44	1.29	0.04	7 470	4 860	210	4 300	1.65	**YET 209-111**
	85	*43,7*	*22*	*56,8*	*62*	*32,7*	*1*	*33,2*	*21,6*	*0,915*		*0,74*	
1 3/4	3.3465	2.22	0.87	2.24	2.44	1.37	0.04	7 470	4 860	210	4 300	1.75	**YEL 209-112-2F**
44,45	*85*	*56,3*	*22*	*56,8*	*62*	*34,9*	*1*	*33,2*	*21,6*	*0,915*		*0,80*	
	3.3465	1.72	0.87	2.24	2.44	1.29	0.04	7 470	4 860	210	4 300	1.55	**YET 209-112**
	85	*43,7*	*22*	*56,8*	*62*	*32,7*	*1*	*33,2*	*21,6*	*0,915*		*0,70*	
1 15/16	3.5433	2.47	0.87	2.46	2.65	1.50	0.04	7 900	5 220	220	4 000	2.05	**YEL 210-115-2F**
49,213	*90*	*62,7*	*22*	*62,5*	*67,2*	*38,1*	*1*	*35,1*	*23,2*	*0,98*		*0,94*	
2	3.9370	2.81	0.98	2.72	2.93	1.72	0.04	9 810	6 530	280	3 600	3.30	**YEL 211-200-2F**
50,8	*100*	*71,4*	*25*	*69,1*	*74,5*	*43,6*	*1*	*43,6*	*29*	*1,25*		*1,50*	
2 3/16	3.9370	2.81	0.98	2.72	2.93	1.72	0.04	9 810	6 530	280	3 600	2.85	**YEL 211-203-2F**
55,563	*100*	*71,4*	*25*	*69,1*	*74,5*	*43,6*	*1*	*43,6*	*29*	*1,25*		*1,30*	
2 7/16	4.3307	3.06	1.02	2.98	3.23	1.84	0.06	11 860	8 100	340	3 400	3.75	**YEL 212-207-2F**
61,913	*110*	*77,8*	*26*	*75,6*	*82*	*46,8*	*1,5*	*52,7*	*36*	*1,53*		*1,70*	
	4.3307	2.09	1.02	2.98	3.23	1.84	0.06	11 860	8 100	340	3 400	2.65	**YET 212-207**
	110	*53,1*	*26*	*75,6*	*82*	*46,8*	*1,5*	*52,7*	*36*	*1,53*		*1,20*	

Y-bearings with a tapered bore on an adapter sleeve, metric shafts
d **20 – 60** mm

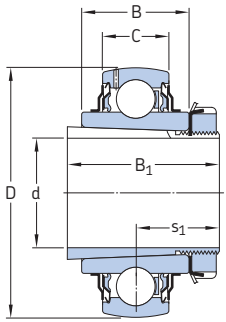

Dimensions						Basic load ratings dynamic	static	Fatigue load limit	Limiting speed with shaft tolerance h6	Mass Bearing + sleeve	Designations Bearing	Adapter sleeve
d	D	B	B_1	C	s_1	C	C_0	P_u				
mm						kN		kN	r/min	kg	–	
20	52	24	35	15	20	14	7,8	0,335	7 000	0,22	**YSA 205-2FK**	**H 2305**
25	62	28	38	18	22	19,5	11,2	0,475	6 300	0,33	**YSA 206-2FK**	**H 2306**
30	72	30,5	43	19	24,3	25,5	15,3	0,655	5 300	0,47	**YSA 207-2FK**	**H 2307**
35	80	33,9	46	21	27	30,7	19	0,8	4 800	0,69	**YSA 208-2FK**	**H 2308**
40	85	35	50	22	28,5	33,2	21,6	0,915	4 300	0,77	**YSA 209-2FK**	**H 2309**
45	90	37	55	22	30,5	35,1	23,2	0,98	4 000	0,88	**YSA 210-2FK**	**H 2310**
50	100	40	59	25	32,5	43,6	29	1,25	3 600	1,10	**YSA 211-2FK**	**H 2311**
55	110	42,5	62	26	34,3	52,7	36	1,53	3 400	1,40	**YSA 212-2FK**	**H 2312**
60	120	43,5	65	27	35,8	57,2	40	1,7	3 000	1,70	**YSA 213-2FK**	**H 2313**

Y-bearings with a tapered bore on an adapter sleeve, inch shafts
d **3/4 – 2 3/8** in

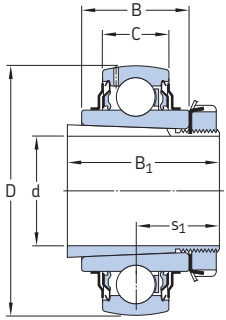

Dimensions						**Basic load ratings**		**Fatigue load limit**	**Limiting speed**	**Mass**	**Designations**	
d	D	B	B_1	C	s_1	dyn. C	stat C_0	P_u	with shaft tolerance h6	Bearing + sleeve	Bearing	Adapter sleeve
in/*mm*						lbf/*kN*		lbf/*kN*	r/min	lb/*kg*	–	
3/4	2.0472	0.95	1.38	0.59	0.79	3 150	1 760	80	7 000	0.49	**YSA 205-2FK**	**HE 2305**
19,05	*52*	*24*	*35*	*15*	*20*	*14*	*7,8*	*0,335*		*0,22*		
15/16	2.4409	1.10	1.50	0.71	0.87	4 390	2 520	110	6 300	0.77	**YSA 206-2FK**	**HA 2306**
23,813	*62*	*28*	*38*	*18*	*22*	*20*	*11,2*	*0,475*		*0,35*		
1	2.4409	1.10	1.50	0.71	0.87	4 390	2 520	110	6 300	0.73	**YSA 206-2FK**	**HE 2306**
25,4	*62*	*28*	*38*	*18*	*22*	*20*	*11,2*	*0,475*		*0,33*		
1 3/16	2.8346	1.20	1.69	0.75	0.96	5 740	3 440	150	5 300	1.05	**YSA 207-2FK**	**HA 2307**
30,163	*72*	*30,5*	*43*	*19*	*24,3*	*26*	*15,3*	*0,655*		*0,47*		
1 1/4	3.1496	1.34	1.81	0.83	1.06	6 910	4 280	180	4 800	1.50	**YSA 208-2FK**	**HE 2308**
31,75	*80*	*33,9*	*46*	*21*	*27*	*31*	*19*	*0,8*		*0,69*		
1 7/16	3.3465	1.38	1.97	0.87	1.12	7 470	4 860	210	4 300	1.80	**YSA 209-2FK**	**HA 2309**
36,513	*85*	*35*	*50*	*22*	*28,5*	*33*	*21,6*	*0,915*		*0,81*		
1 1/2	3.3465	1.38	1.97	0.87	1.12	7 470	4 860	210	4 300	1.70	**YSA 209-2FK**	**HE 2309**
38,1	*85*	*35*	*50*	*22*	*28,5*	*33*	*21,6*	*0,915*		*0,77*		
1 5/8	3.5433	1.46	2.17	0.87	1.20	7 900	5 220	220	4 000	2.05	**YSA 210-2FK**	**HS 2310**
41,275	*90*	*37*	*55*	*22*	*30,5*	*35*	*23,2*	*0,98*		*0,94*		
1 11/16	3.5433	1.46	2.17	0.87	1.20	7 900	5 220	220	4 000	2	**YSA 210-2FK**	**HA 2310**
42,863	*90*	*37*	*55*	*22*	*30,5*	*35*	*23,2*	*0,98*		*0,91*		
1 3/4	3.5433	1.46	2.17	0.87	1.20	7 900	5 220	220	4 000	1.95	**YSA 210-2FK**	**HE 2310**
44,45	*90*	*37*	*55*	*22*	*30,5*	*35*	*23,2*	*0,98*		*0,88*		
1 15/16	3.937	1.58	2.32	0.98	1.28	9 810	6 530	280	3 600	2.45	**YSA 211-2FK**	**HA 2311**
49,213	*100*	*40*	*59*	*25*	*32,5*	*44*	*29*	*1,25*		*1,10*		
2	3.937	1.58	2.32	0.98	1.28	9 810	6 530	280	3 600	2.45	**YSA 211-2FK**	**HE 2311 B**
50,800	*100*	*40*	*59*	*25*	*32,5*	*44*	*29*	*1,25*		*1,10*		
2 1/8	4.3307	1.67	2.44	1.02	1.35	11 860	8 100	340	3 400	3.10	**YSA 212-2FK**	**HS 2312**
53,975	*110*	*42,5*	*62*	*26*	*34,3*	*53*	*36*	*1,53*		*1,40*		
2 3/16	4.7244	1.71	2.56	1.06	1.41	12 870	9 000	380	3 000	4.20	**YSA 213-2FK**	**HA 2313**
55,563	*120*	*43,5*	*65*	*27*	*35,8*	*57*	*40*	*1,7*		*1,90*		

Dimensions						**Basic load ratings**		**Fatigue load limit**	**Limiting speed**	**Mass**	**Designations**	
d	D	B	B_1	C	s_1	dyn. C	stat C_0	P_u	with shaft tolerance h6	Bearing + sleeve	Bearing	Adapter sleeve
in/*mm*						lbf/*kN*		lbf/*kN*	r/min	lb/*kg*	–	
2 1/4 *57,15*	4.7244 *120*	1.71 *43,5*	2.56 *65*	1.06 *27*	1.41 *35,8*	12 870 *57*	9 000 *40*	380 *1,7*	3 000	3.95 *1,80*	**YSA 213-2FK**	**HE 2313**
2 3/8 *60,325*	4.7244 *120*	1.71 *43,5*	2.56 *65*	1.06 *27*	1.41 *35,8*	12 870 *57*	9 000 *40*	380 *1,7*	3 000	3.75 *1,70*	**YSA 213-2FK**	**HS 2313**

Y-bearings with a standard inner ring, metric shafts
d **17 – 60** mm

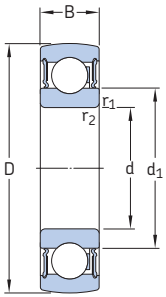

Dimensions					Basic load ratings dynamic	static	Fatigue load limit	Limiting speed	Mass	Designation
d	D	B	d_1	$r_{1,2}$ min	C	C_0	P_u			
mm					kN		kN	r/min	kg	–
17	40	12	24,2	0,6	9,56	4,75	0,2	12 000	0,056	**1726203-2RS1**
20	47	14	28,5	1	12,7	6,55	0,28	10 000	0,095	**1726204-2RS1**
25	52	15	34	1	14	7,8	0,335	8 500	0,11	**1726205-2RS1**
	62	17	36,6	1.1	22,5	11,6	0,49	7 500	0,20	**1726305-2RS1**
30	62	16	40,3	1	19,5	11,2	0,475	7 500	0,18	**1726206-2RS1**
	72	19	44,6	1,1	28,1	16	0,67	6 300	0,30	**1726306-2RS1**
35	72	17	46,9	1,1	25,5	15,3	0,655	6 300	0,25	**1726207-2RS1**
	80	21	49,6	1,5	33,2	19	0,815	6 000	0,40	**1726307-2RS1**
40	80	18	52,6	1,1	30,7	19	0,8	5 600	0,32	**1726208-2RS1**
	90	23	56,1	1,5	41	24	1	5 000	0,55	**1726308-2RS1**
45	85	19	57,6	1,1	33,2	21,6	0,915	5 000	0,37	**1726209-2RS1**
	100	25	62,1	1,5	52,7	31,5	1,34	4 500	0,73	**1726309-2RS1**
50	90	20	62,5	1,1	35,1	23,2	0,98	4 800	0,41	**1726210-2RS1**
	110	27	68,7	2	61,8	38	1,6	4 300	0,95	**1726310-2RS1**
55	100	21	69	1,5	43,6	29	1,25	4 300	0,54	**1726211-2RS1**
60	110	22	75,5	1,5	52,7	36	1,53	4 000	0,70	**1726212-2RS1**


SKF

Y-bearing plummer block units

Designs **112**

Y-TECH plummer block units **113**

Y-bearing plummer block units with a cast housing **113**

Y-bearing plummer block units with a pressed steel housing **116**

Data – general **116**
Dimensions 116
Tolerances 117
Radial internal clearance 117
Materials 117
Load carrying ability of the housings 117
End covers 118
Attaching to a support surface 118
Grease fills 118
Mounting 118

Product tables **120**
3.1 Y-TECH plummer block units with grub screws, metric shafts 120
3.2 Y-bearing plummer block units with a cast housing and grub screws,
metric shafts 122
inch shafts 126
3.3 Y-bearing plummer block units with a cast housing and an eccentric locking collar
metric shafts 134
inch shafts 136
3.4 Y-bearing plummer block units with a cast housing and an adapter sleeve,
metric shafts 142
inch shafts 144
3.5 Y-bearing plummer block units with a shortened cast housing and grub screws,
metric shafts 148
3.6 Y-bearing plummer block units with a shortened cast housing and an eccentric locking collar,
metric shafts 150
3.7 Y-bearing plummer block units with a pressed steel housing and grub screws,
metric shafts 152
inch shafts 156
3.8 Y-bearing plummer block units with a pressed steel housing and an eccentric locking collar,
metric shafts 158
inch shafts 160

Designs

SKF Y aring plummer (pillow) block units are available as standard in a wide variety of designs. The standard assortment includes plummer block units with housings made of:

- composite material (→ **fig. 1**) referred to as Y-TECH plummer block units
- grey cast iron (→ **fig. 2**)
- pressed sheet steel (→ **fig. 3**)

They are located on the shaft via the inner ring of the insert bearing with either:

- grub (set) screws
- an eccentric locking collar
- an adapter sleeve

The Y-bearing can be sealed with either:

- the standard integral seal
- the standard integral seal and an additional flinger
- the highly efficient multiple seal

Additional information about Y-bearings can be found in the section *Y-bearings*, starting on **page 79**.

Y-bearing plummer block units available from stock are listed in the product tables. Other units can be composed by ordering the parts separately. The table on **pages 114** and **115** shows the wide variety of combinations of Y-bearings and Y-bearing housings.

Fig. 1



Fig. 2



Fig. 3



Y-TECH plummer block units

Y-TECH plummer block units have housings made of composite material. They were developed for bearing arrangements that must operate reliably in difficult environments for extended periods without maintenance.

Y-TECH plummer block units in the SYK series are fitted with Y-bearings in the YAR 2-2F or YAR 2-2RF series and are attached to the shaft with grub screws (→ **fig. 4**). These units are part of the standard SKF product range.

For additional information about Y-TECH plummer block units for the food industry, refer to **page 274**.

Fig. 4



Y-bearing plummer block units with a cast housing

Y-bearing plummer block units with a grey cast iron housing can be relubricated through a grease fitting in the housing. This makes them especially suitable for bearing arrangements that operate under any of the following conditions:

- high levels of contamination
- high speeds
- high temperatures
- relatively heavy loads

Four different housing designs are available:

- SY(J) series with two oblong holes for the attachment bolts in the base of the housing (→ **fig. 5**)
- SYH series, which is similar to the SY series, but with a lower centre height
- SYM series, which is similar to the SY series, but accommodates a larger bearing for a given shaft size, resulting in a greater load carrying capacity
- SYF(J) series with a shortened base that contains two threaded holes in the support base (→ **fig. 6**)

Fig. 5



Fig. 6



Y-bearing plummer block units

Y-bearing unit	Y-bearing housings					
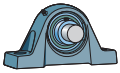						
Y-bearings	**SYK 5(00)**	**SY 5(00)**	**SYJ 5(00)**	**SYH 5(00)**	**SYM 5(00)**	**SYF 5(00)**
YAR 2-2F 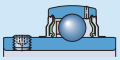	**SYK .. TF** 20–40 mm	**SY .. TF** 12–65 mm 1/2–2 15/16 in.	**SYJ .. TF** 20–100 mm 3/4–2 1/2 in.	**SYH .. TF** 1/2–2 7/16 in.	**SYM .. TF** 1 7/16–3 in.	**SYF .. TF** 20–50 mm 3/4–1 3/4 in.[1]
YAR 2-2RF 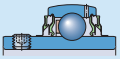	**SYK .. TR** 20–40 mm	**SY .. TR** 20–60 mm 3/4–2 1/2 in.[1]	20–65 mm[1] 3/4–2 1/2 in.[1]	–	–	20–50 mm[1] 3/4–1 3/4 in.[1]
YAR 2-2RF/HV 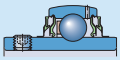	20–40 mm[1] 3/4–1 1/2 in.[1]	20–50 mm 3/4–1 15/16 in.	20–50 mm 3/4–1 15/16 in.	–	–	20–50 mm 3/4–1 15/16 in.
YAR 2-2RF/ VE495 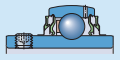	20–40 mm[1]	20–50 mm	20–50 mm	–	–	20–50 mm
YAT 2 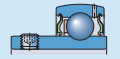	20–40 mm[1]	17–50 mm[1]	20–50 mm[1]	–	–	20–50 mm[1]
YEL 2-2F 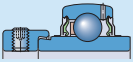	20–40 mm[1]	**SY .. WF** 20–60 mm 1 7/16–1 15/16 in.	20–60 mm[1]	**SYH .. WF** 3/4–2 7/16 in.	–	20–50 mm[1]
YEL 2-2RF/ VL065 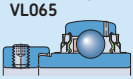	20–40 mm[1]	20–40 mm[1]	20–40 mm[1]	–	–	20–40 mm[1]
YET 2 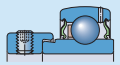	20–40 mm[1]	**SY .. FM** 15–60 mm 3/4–1 1/2 in.[1]	20–60 mm[1] 3/4–1 1/2 in.[1]	**SYH .. FM** 1–2 in.	–	**SYF .. FM** 20–50 mm 3/4–1 1/2 in.[1]
YSA 2-2FK on adapter sleeve 	20– 35 mm[1] 3/4–1 1/4 in.[1]	20–60 mm[1] 3/4–2 3/8 in.[1]	**SYJ .. KF** 20–60 mm 3/4–2 3/8 in.	–	–	20–45 mm[1] 3/4–1 3/4 in.[1]
17262(00) 	20–40 mm[1]	17–60 mm[1]	20–60 mm[1]	–	–	20–50 mm[1]

[1] Parts must be ordered separately.

Y-bearing unit 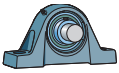	Y-bearing housings	
		
Y-bearings	**SYFJ 5(00)**	**P 40 – P 85**
YAR 2-2F 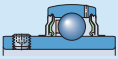	**SYFJ .. TF** 20–50 mm 3/4–1 3/4 in.[1]	12–45 mm[1] 1/2–1 3/4 in.[1]
YAR 2-2RF 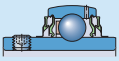	20–50 mm[1] 3/4–1 3/4 in.[1]	12–45 mm[1] 3/4–1 3/4 in.[1]
YAR 2-2RF/HV 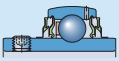	20–50 mm 3/4–1 15/16 in.	20–40 mm[1] 3/4–1 1/2 in.[1]
YAR 2-2RF/ VE495 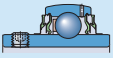	20–50 mm	20–40 mm[1]
YAT 2 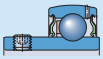	20–50 mm[1]	17–45 mm[1] 5/8–1 3/4 in.[1]
YEL 2-2F 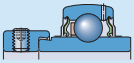	20–50 mm[1]	12–45 mm[1] 1/2–1 3/4 in.[1]
YEL 2-2RF/ VL065 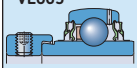	20–40 mm[1]	20–40 mm[1]
YET 2 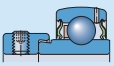	**SYFJ .. FM** 20–50 mm 3/4–1 1/2 in.[1]	15–45 mm[1] 1/2–1 3/4 in.[1]
YSA 2-2FK on adapter sleeve 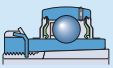	12–45 mm[1] 3/4–1 3/4 in.[1]	20–40 mm[1] 3/4–1 1/2 in.[1]
17262(00) 	20–50 mm[1]	17–45 mm[1]

[1] Parts must be ordered separately.

Y-bearing plummer block units with a pressed steel housing

Y-bearing plummer block units (→ **fig. 7**) with a pressed steel housing are designed for simple applications with limited loads and speeds. The two-part housing, which has no provision for relubrication, is ordered separately from the insert bearing. The individual items that make up a Y-bearing unit are:

- the two-part housing
- the Y-bearing
- the rubber seating ring, if needed

The advantage of ordering individual components is that a large number of combinations are possible.

Rubber seating rings made of acrylonitrile-butadiene rubber in the RIS 2 series (→ **fig. 8**) are available for these Y-bearing plummer blocks and are meant to reduce running noise and dampen vibration. The rubber seating rings also enable the bearings to be displaced slightly in their housings, for example, to accommodate shaft elongation.

Y-bearing units with a rubber seating ring are also listed in the product tables. Detailed information about rubber seating rings can be found in the section *Design of Y-bearing arrangements* on **pages 45** and **46**.

Fig. 7



Fig. 8



Data – general

Dimensions

The boundary dimensions of most Y-bearing plummer block housings are in accordance with the following standards:

- Housings in the SY 5(00) M series are in accordance with ISO 3228:1993.
- Housings in the SY 5(00) U series are in accordance with ISO 3228:1993, except the centre height H_1, which deviates for several housing sizes.
- Housings in the SYH series are in accordance with ISO 3228:1993, except the centre height H_1, which is lower than the standard.
- Housings in the SYJ series are in accordance with JIS B 1559-1995.
- Housings in the P series are in accordance with ISO 3228:1993, except the centre height H_1, which deviates slightly.

Y-bearing plummer block housings in the SYF, SYFJ and SYM series have not been standardized either nationally or internationally, but are common in the marketplace.

Tolerances

The tolerance for the shaft centre height H_1 (→ **fig. 9**) is

- ±0,25 mm for plummer block units with a bearing bore diameter ≤ 40 mm, except for units in the SYK series, where the tolerance is +/– 0,31 mm
- ±0,30 mm for the larger plummer block units.

For Y-bearing plummer block units with composite or cast housings, the outside diameter of the bearing is matched to the diameter of the housing bore so that the outer ring is prevented from turning in its seat, but still able to compensate for misalignment.

Additional information about tolerances for the inner ring bore are listed in the section *Y-bearings* on **page 89**.

Radial internal clearance

The Y-bearing used in a Y-bearing plummer block unit has the same radial internal clearance as a similarly sized individual Y-bearing.

Additional information about the radial internal clearance can be found in the section *Y-bearings* on **page 90**.

Materials

Composite housings

Y-housings in the SYK series are made of injection moulded glass fibre reinforced polyamide 6. A steel coil embedded in the housing adds greater stability to the form of the housing, even if operating temperatures are elevated.

The housing bolt holes are reinforced with zinc-plated sheet steel inserts. The standard housing colour is black.

Cast housings

Housings in the SY(J), SYH, SYM and SYF(J) series are manufactured from grey cast iron EN-GJL HB195 in accordance with EN 1561:1997.

Pressed steel housings

Pressed steel housings in the P series are made from cold-rolled sheet steel and are zinc-coated for corrosion protection.

Fig. 9

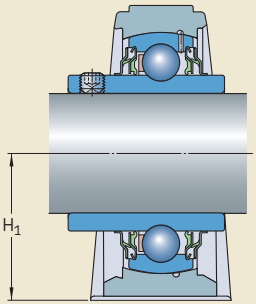

Load carrying ability of the housings

Housings made of composite material or grey cast iron are able to withstand the same dynamic and static loads as the Y-bearings they incorporate. These Y-bearing units can also be used in applications where shock loads or variable axial loads occur.

If SKF Y-bearing units are to be used in an application where health, safety, or the environment is at risk, contact the SKF application engineering service during the design phase.

Pressed steel housings have a lower load carrying capacity than their insert bearings. Permissible radial loads are specified in the product tables. The axial load should not exceed 20% of the permissible radial load.

If the bearing arrangement will be subjected to shock loads or variable axial loads, Y-bearing units with a cast or Y-TECH housing should always be used.

End covers

To protect the shaft ends and avoid contact to rotating shaft ends, end covers are available for composite and cast Y-bearing plummer block units (→ **fig. 10**).

In the product tables, end covers in the ECY 2 series are shown together with the appropriate bearing unit. The designation of the end cover is listed together with the distance that the end cover protrudes from the housing.

For additional information about end covers, refer to the section *Design of Y-bearing arrangements* on **page 47**.

Attaching to a support surface

Plummer block units have two bolt holes in the housing base through which they can be attached to their support surface with threaded fasteners. The bolt holes vary for different housings. Housings made of:

- composite material have oblong bolt holes, reinforced with zinc-coated sheet steel or stainless steel inserts
- grey cast iron – SY(J), SYH and SYM series – have cast oblong bolt holes
- grey cast iron – SYF and SYFJ series – have threaded holes in the support base
- pressed steel have round bolt holes

If the loads acting on a housing are between 55° and 120° (→ **fig. 11**), Y-TECH bearing units and SY(J), SYH and SYM plummer block units should be doweled to the support surface or stops should be provided in the direction of the load.

Recommendations for the position and size of the dowel pin holes for SY, SYJ and SYH series housings are provided in **table 1**.

Grease fills

With the exception of SKF Y-bearing units for the food industry, all standard SKF Y-bearing plummer block units are filled with a high-quality, long-lasting grease containing a lithium-calcium thickener that has a consistency of 2 on the NLGI scale.

For additional information about lubricants and lubrication, refer to the section *Lubrication and maintenance*, starting on **page 48**.

Fig. 10

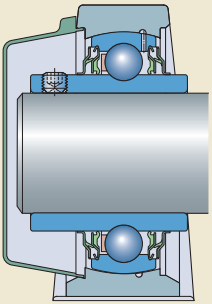

Fig. 11

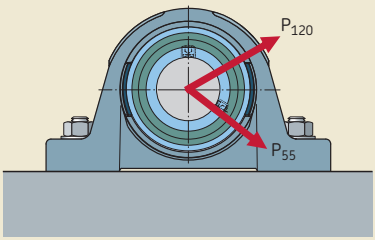

Mounting

The procedure for mounting a Y-bearing plummer block unit depends on:

- the design of the housing
- the method used to attach the unit to the shaft

These methods are described in detail in the section *Mounting instructions*, starting on **page 52**.

Table 1

Position and size of dowel pin holes for Y-bearing plummer block housings made of grey cast iron

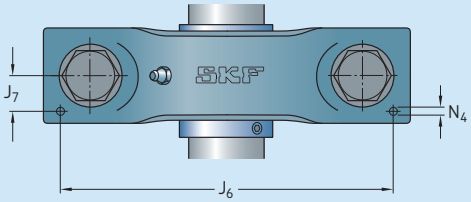

Housing size	Dimensions for housings in the SYJ series			SY, SYH series		
	J_6	J_7	N_4	J_6	J_7	N_4
–	mm					
503	–	–	–	118	11,5	2
504	118	12,5	2	118	11,5	2
505	130	14	2	120	13	2
506	155	15	2	140	14	2
507	153	16	4	146	15,5	4
508	170	17,5	4	161	17	4
509	174	18	4	173	17	4
510	190	21	5	187	19	5
511	201	21	5	201	21	5
512	223	23,5	5	222	21	5
513	241	23	5	238	22,5	5
514	246	26	6	240	22,5	6
515	255	27	6	–	–	–
516	270	28	6	285	29	6
518	303	32	8	–	–	–
520	352	33,5	8	–	–	–

Y-TECH plummer block units with grub screws, metric shafts
d **20 – 40** mm

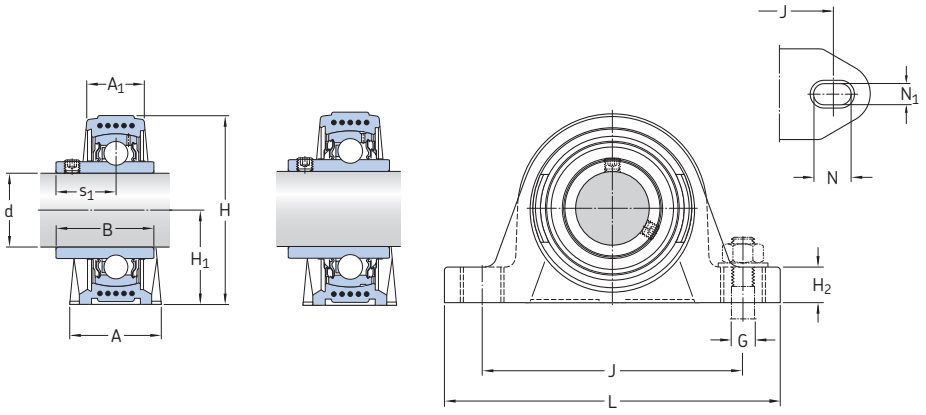

TF TR

Dimensions													Basic load ratings		Fatigue load limit	Limiting speed	Designation
													dynamic	static		with shaft tolerance	Bearing unit
d	A	A_1	B	H	H_1	H_2	J	L	N	N_1	G	s_1	C	C_0	P_u	h6	
mm													kN		kN	r/min	–
20	32	21	31	64	33,3	16	96	126	17,5	12	10	18,3	12,7	6,55	0,28	8 500	**SYK 20 TF**
	32	21	31	64	33,3	16	96	126	17,5	12	10	18,3	12,7	6,55	0,28	5 000	**SYK 20 TR**
25	32	22	34,1	70,5	36,5	16	105	134	17,5	12	10	19,8	14	7,8	0,335	7 000	**SYK 25 TF**
	32	22	34,1	70,5	36,5	16	105	134	17,5	12	10	19,8	14	7,8	0,335	4 300	**SYK 25 TR**
30	40	25	38,1	82	42,9	19	121	159	21,5	14,5	12	22,2	19,5	11,2	0,475	6 300	**SYK 30 TF**
	40	25	38,1	82	42,9	19	121	159	21,5	14,5	12	22,2	19,5	11,2	0,475	3 800	**SYK 30 TR**
35	45	27	42,9	93	47,6	19	126	164	21,5	14,5	12	25,4	25,5	15,3	0,655	5 300	**SYK 35 TF**
	45	27	42,9	93	47,6	19	126	164	21,5	14,5	12	25,4	25,5	15,3	0,655	3 200	**SYK 35 TR**
40	48	30	49,2	99	49,2	19	136	176	21,5	14,5	12	30,2	30,7	19	0,8	4 800	**SYK 40 TF**
	48	30	49,2	99	49,2	19	136	176	21,5	14,5	12	30,2	30,7	19	0,8	2 800	**SYK 40 TR**

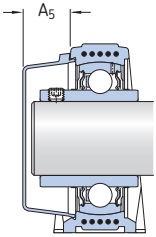

Designations			Mass	Appropriate end cover	
Bearing unit	Separate components		Bearing unit	Designation	Dimension
	Housing	Bearing			A_5
–			kg	–	mm
SYK 20 TF	SYK 504	YAR 204-2F	0,24	ECY 204	18,5
SYK 20 TR	SYK 504	YAR 204-2RF	0,24	ECY 204	18,5
SYK 25 TF	SYK 505	YAR 205-2F	0,29	ECY 205	18
SYK 25 TR	SYK 505	YAR 205-2RF	0,29	ECY 205	18
SYK 30 TF	SYK 506	YAR 206-2F	0,49	ECY 206	20
SYK 30 TR	SYK 506	YAR 206-2RF	0,49	ECY 206	20
SYK 35 TF	SYK 507	YAR 207-2F	0,66	ECY 207	22
SYK 35 TR	SYK 507	YAR 207-2RF	0,66	ECY 207	22
SYK 40 TF	SYK 508	YAR 208-2F	0,86	ECY 208	23,5
SYK 40 TR	SYK 508	YAR 208-2RF	0,86	ECY 208	23,5

Y-bearing plummer block units with a cast housing and grub screws, metric shafts
d **12 – 60** mm

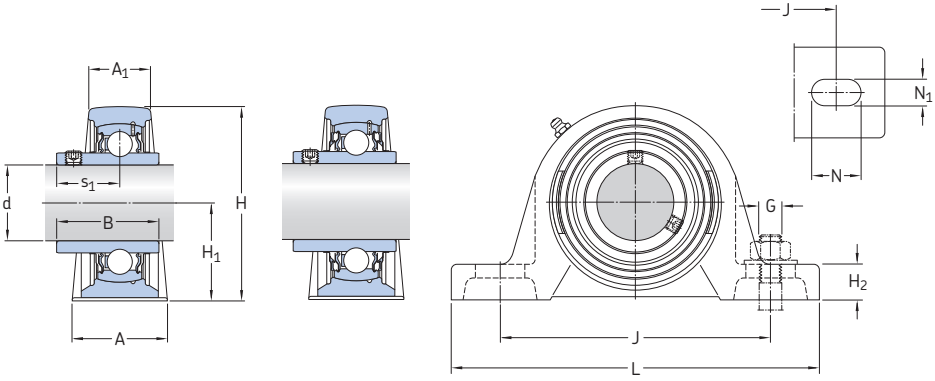

TF TR

Dimensions													Basic load ratings		Fatigue load limit	Limiting speed	Designation
													dynamic	static		with shaft tolerance	Bearing unit
d	A	A_1	B	H	H_1	H_2	J	L	N	N_1	G	s_1	C	C_0	P_u	h6	
mm													kN		kN	r/min	–
12	32	18	27,4	57	30,2	14	97	127	20,5	11,5	10	15,9	9,56	4,75	0,2	9 500	**SY 12 TF**
15	32	18	27,4	57	30,2	14	97	127	20,5	11,5	10	15,9	9,56	4,75	0,2	9 500	**SY 15 TF**
17	32	18	27,4	57	30,2	14	97	127	20,5	11,5	10	15,9	9,56	4,75	0,2	9 500	**SY 17 TF**
20	32	21	31	65	33,3	14	97	127	20,5	11,5	10	18,3	12,7	6,55	0,28	8 500	**SY 20 TF**
	34	23	31	65	33,3	14	97	127	20,7	13	10	18,3	12,7	6,55	0,28	8 500	**SYJ 20 TF**
	32	21	31	65	33,3	14	97	127	20,5	11,5	10	18,3	12,7	6,55	0,28	5 000	**SY 20 TR**
25	36	22	34,1	70,5	36,5	16	102	130	19,5	11,5	10	19,8	14	7,8	0,335	7 000	**SY 25 TF**
	38	24	34,1	70,5	36,5	16	102,5	140	21,5	13	10	19,8	14	7,8	0,335	7 000	**SYJ 25 TF**
	36	22	34,1	70,5	36,5	16	102	130	19,5	11,5	10	19,8	14	7,8	0,335	4 300	**SY 25 TR**
30	40	25	38,1	82,5	42,9	17	117,5	152	23,5	14	12	22,2	19,5	11,2	0,475	6 300	**SY 30 TF**
	42	27	38,1	82,5	42,9	16	118	165	24	17	14	22,2	19,5	11,2	0,475	6 300	**SYJ 30 TF**
	40	25	38,1	82,5	42,9	17	117,5	152	23,5	14	12	22,2	19,5	11,2	0,475	3 800	**SY 30 TR**
35	45	27	42,9	93	47,6	19	126	160	21	14	12	25,4	25,5	15,3	0,655	5 300	**SY 35 TF**
	46	28	42,9	93	47,6	17	129	167	24	17	14	25,4	25,5	15,3	0,655	5 300	**SYJ 35 TF**
	45	27	42,9	93	47,6	19	126	160	21	14	12	25,4	25,5	15,3	0,655	3 200	**SY 35 TR**
40	48	30	49,2	99	49,2	19	135,5	175	24,5	14	12	30,2	30,7	19	0,8	4 800	**SY 40 TF**
	49	31	49,2	99	49,2	18	136,5	184	25,5	17	14	30,2	30,7	19	0,8	4 800	**SYJ 40 TF**
	48	30	49,2	99	49,2	19	135,5	175	24,5	14	12	30,2	30,7	19	0,8	2 800	**SY 40 TR**
45	48	32	49,2	107,5	54	21	143,5	187	22,5	14	12	30,2	33,2	21,6	0,915	4 300	**SY 45 TF**
	52	36	49,2	107,5	54	20	143,5	190	23,5	17	14	30,2	33,2	21,6	0,915	4 300	**SYJ 45 TF**
	48	32	49,2	107,5	54	21	143,5	187	22,5	14	12	30,2	33,2	21,6	0,915	2 400	**SY 45 TR**
50	54	34	51,6	114,5	57,2	22	157	203	26	18	16	32,6	35,1	23,2	0,98	4 000	**SY 50 TF**
	58	38	51,6	114,5	57,2	22	157,5	206	26,5	20	16	32,6	35,1	23,2	0,98	4 000	**SYJ 50 TF**
	54	34	51,6	114,5	57,2	22	157	203	26	18	16	32,6	35,1	23,2	0,98	2 200	**SY 50 TR**
55	60	40	55,6	126	63,5	24	171,5	219	27,5	18	16	33,4	43,6	29	1,25	3 600	**SY 55 TF**
	60	40	55,6	126	63,5	24	171,5	219	27,5	20	16	33,4	43,6	29	1,25	3 600	**SYJ 55 TF**
	60	40	55,6	126	63,5	24	171,5	219	27,5	18	16	33,4	43,6	29	1,25	1 900	**SY 55 TR**
60	60	42	65,1	138	69,8	26,5	190,5	240	29,5	18	16	39,7	52,7	36	1,53	3 400	**SY 60 TF**
	65	47	65,1	138	69,8	26,5	188,5	241	29,5	20	16	39,7	52,7	36	1,53	3 400	**SYJ 60 TF**
	60	42	65,1	138	69,8	26,5	190,5	240	29,5	18	16	39,7	52,7	36	1,53	1 800	**SY 60 TR**

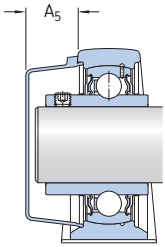

Designations			Mass	Appropriate end cover	
Bearing unit	Separate components		Bearing unit	Designation	Dimension
	Housing	Bearing			A_5
–			kg	–	mm
SY 12 TF	SY 503 M	YAR 203/12-2F	0,52	–	–
SY 15 TF	SY 503 M	YAR 203/15-2F	0,51	–	–
SY 17 TF	SY 503 M	YAR 203-2F	0,50	–	–
SY 20 TF	SY 504 M	YAR 204-2F	0,57	ECY 204	18,5
SYJ 20 TF	SYJ 504	YAR 204-2F	0,55	–	–
SY 20 TR	SY 504 M	YAR 204-2RF	0,57	ECY 204	18,5
SY 25 TF	SY 505 M	YAR 205-2F	0,72	ECY 205	18
SYJ 25 TF	SYJ 505	YAR 205-2F	0,73	–	–
SY 25 TR	SY 505 M	YAR 205-2RF	0,72	ECY 205	18
SY 30 TF	SY 506 M	YAR 206-2F	1,10	ECY 206	20
SYJ 30 TF	SYJ 506	YAR 206-2F	1,05	–	–
SY 30 TR	SY 506 M	YAR 206-2RF	1,10	ECY 206	20
SY 35 TF	SY 507 M	YAR 207-2F	1,45	ECY 207	22
SYJ 35 TF	SYJ 507	YAR 207-2F	1,50	–	–
SY 35 TR	SY 507 M	YAR 207-2RF	1,45	ECY 207	22
SY 40 TF	SY 508 M	YAR 208-2F	1,80	ECY 208	23,5
SYJ 40 TF	SYJ 508	YAR 208-2F	1,85	–	–
SY 40 TR	SY 508 M	YAR 208-2RF	1,80	ECY 208	23,5
SY 45 TF	SY 509 M	YAR 209-2F	2,20	ECY 209	23
SYJ 45 TF	SYJ 509	YAR 209-2F	2,40	–	–
SY 45 TR	SY 509 M	YAR 209-2RF	2,20	ECY 209	23
SY 50 TF	SY 510 M	YAR 210-2F	2,70	ECY 210	29,5
SYJ 50 TF	SYJ 510	YAR 210-2F	2,95	–	–
SY 50 TR	SY 510 M	YAR 210-2RF	2,70	ECY 210	29,5
SY 55 TF	SY 511 M	YAR 211-2F	3,60	ECY 211	34
SYJ 55 TF	SYJ 511	YAR 211-2F	3,70	–	–
SY 55 TR	SY 511 M	YAR 211-2RF	3,60	ECY 211	34
SY 60 TF	SY 512 M	YAR 212-2F	4,45	ECY 212	35,5
SYJ 60 TF	SYJ 512	YAR 212-2F	4,85	–	–
SY 60 TR	SY 512 M	YAR 212-2RF	4,45	ECY 212	35,5

Y-bearing plummer block units with a cast housing and grub screws, metric shafts
d **65 – 100** mm

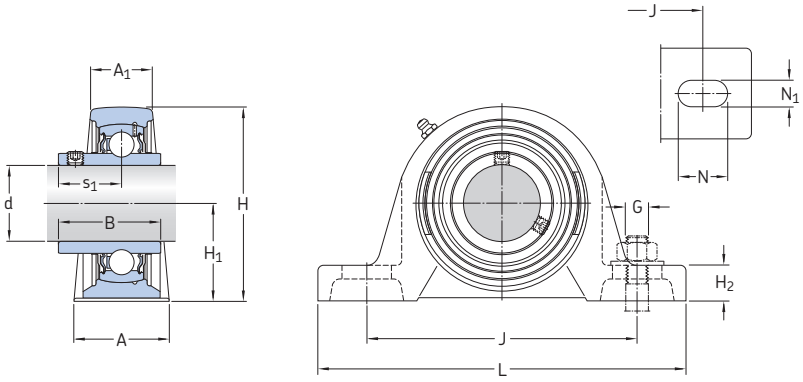

TF

Dimensions													Basic load ratings		Fatigue load limit	Limiting speed	Designation
													dynamic	static		with shaft tolerance	Bearing unit
d	A	A_1	B	H	H_1	H_2	J	L	N	N_1	G	s_1	C	C_0	P_u	h6	
mm													kN		kN	r/min	–
65	65	44	68,3	151	76,2	29	203	257	35	22	20	42,9	57,2	40	1,7	3 000	**SY 65 TF**
	70	49	68,3	151	76,2	27	203	265	35	25	20	42,9	57,2	40	1,7	3 000	**SYJ 65 TF**
70	72	46	69,9	156	79,4	27	210	266	30	25	20	39,7	62,4	45	1,86	2 800	**SYJ 70 TF**
75	74	54	73,1	166	82,5	28	217	275	30	25	20	46,1	66,3	49	2,04	2 600	**SYJ 75 TF**
80	78	50	77,9	176	88,9	30	232	292	35	25	20	47,7	72,8	53	2,16	2 400	**SYJ 80 TF**
90	88	54	89	201	101,6	33	262	327	35	27	22	54	95,6	72	2,7	2 000	**SYJ 90 TF**
100	95	57	98,4	226	115	38	308	380	48	26	24	63,4	124	93	3,35	1 900	**SYJ 100 TF**

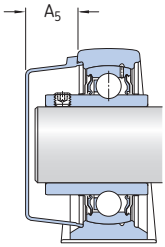

Designations Bearing unit	Separate components Housing	Bearing	**Mass** Bearing unit	**Appropriate end cover** Designation	Dimension A_5
–			kg	–	mm
SY 65 TF	SY 513 M	YAR 213-2F	5,70	ECY 213	35,5
SYJ 65 TF	SYJ 513	YAR 213-2F	6,15	–	–
SYJ 70 TF	SYJ 514	YAR 214-2F	6,20	–	–
SYJ 75 TF	SYJ 515	YAR 215-2F	7,30	–	–
SYJ 80 TF	SYJ 516	YAR 216-2F	9,70	–	–
SYJ 90 TF	SYJ 518	YAR 218-2F	14,0	–	–
SYJ 100 TF	SYJ 520	YAR 220-2F	19,0	–	–

Y-bearing plummer block units with a cast housing and grub screws, inch shafts
d **1/2 – 1 3/16** in

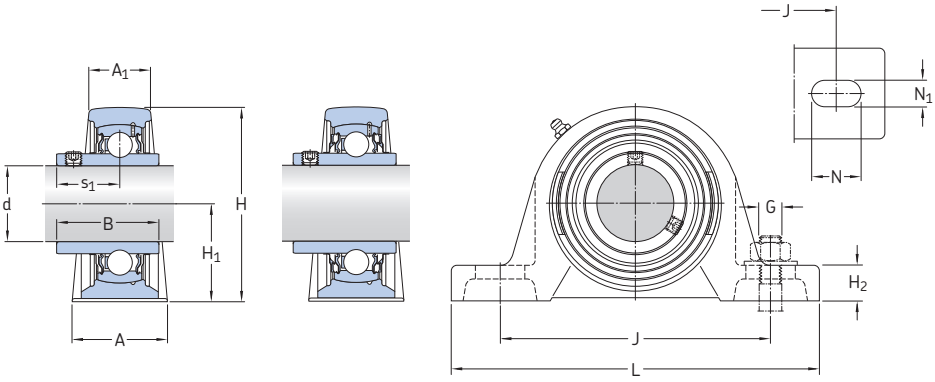

TF TR

Dimensions													Designation Bearing unit
d	A	A_1	B	H	H_1	H_2	J	L	N	N_1	G	s_1	
in/*mm*													–
1/2	1.26	0.71	1.08	2.21	1.19	0.55	3.82	5.00	0.81	0.45	3/8	0.63	**SY 1/2 TF**
12,7	*32*	*18*	*27,4*	*56*	*30,2*	*14*	*97*	*127*	*20,5*	*11,5*	*10*	*15,9*	
	1.26	0.71	1.08	2.09	1.06	0.43	3.82	5.00	0.81	0.45	3/8	0.63	**SYH 1/2 TF**
	32	*18*	*27,4*	*53*	*27*	*10,8*	*97*	*127*	*20,5*	*11,5*	*10*	*15,9*	
3/4	1.26	0.83	1.22	2.56	1.31	0.55	3.82	5.00	0.81	0.45	3/8	0.72	**SY 3/4 TF**
19,05	*32*	*21*	*31*	*65*	*33,3*	*14*	*97*	*127*	*20,5*	*11,5*	*10*	*18,3*	
	1.34	0.91	1.22	2.56	1.31	0.55	3.82	5.00	0.81	0.51	3/8	0.72	**SYJ 3/4 TF**
	34	*23*	*31*	*65*	*33,3*	*14*	*97*	*127*	*20,7*	*13*	*10*	*18,3*	
5/8	1.26	0.71	1.08	2.21	1.19	0.55	3.82	5.00	0.81	0.45	3/8	0.63	**SY 5/8 TF**
15,875	*32*	*18*	*27,4*	*56*	*30,2*	*14*	*97*	*127*	*20,5*	*11,5*	*10*	*15,9*	
13/16	1.42	0.87	1.34	2.76	1.44	0.63	4.02	5.12	0.77	0.45	3/8	0.78	**SY 13/16 TF**
20,637	*36*	*22*	*34,1*	*70*	*36,5*	*16*	*102*	*130*	*19,5*	*11,5*	*10*	*19,8*	
7/8	1.42	0.87	1.34	2.76	1.44	0.63	4.02	5.12	0.77	0.45	3/8	0.78	**SY 7/8 TF**
22,225	*36*	*22*	*34,1*	*70*	*36,5*	*16*	*102*	*130*	*19,5*	*11,5*	*10*	*19,8*	
15/16	1.42	0.87	1.34	2.76	1.44	0.63	4.02	5.12	0.77	0.45	3/8	0.78	**SY 15/16 TF**
23,813	*36*	*22*	*34,1*	*70*	*36,5*	*16*	*102*	*130*	*19,5*	*11,5*	*10*	*19,8*	
1	1.42	0.87	1.34	2.78	1.44	0.63	4.02	5.12	0.77	0.45	3/8	0.78	**SY 1. TF**
25,4	*36*	*22*	*34,1*	*70,5*	*36,5*	*16*	*102*	*130*	*19,5*	*11,5*	*10*	*19,8*	
	1.42	0.87	1.34	2.76	1.44	0.63	4.02	5.12	0.77	0.45	3/8	0.78	**SY 1. TF/AH**
	36	*22*	*34,1*	*70*	*36,5*	*16*	*102*	*130*	*19,5*	*11,5*	*10*	*19,8*	
	1.50	0.94	1.34	2.78	1.44	0.63	4.02	5.51	0.85	0.51	1/2	0.78	**SYJ 1. TF**
	38	*24*	*34,1*	*70,5*	*36,5*	*16*	*102*	*140*	*21,5*	*13*	*12*	*19,8*	
	1.42	0.87	1.34	2.78	1.44	0.63	4.02	5.12	0.77	0.45	3/8	0.78	**SY 1. TR**
	36	*22*	*34,1*	*70,5*	*36,5*	*16*	*102*	*130*	*19,5*	*11,5*	*10*	*19,8*	
1 1/16	1.57	0.98	1.50	3.23	1.69	0.65	4.63	5.98	0.93	0.55	1/2	0.87	**SY 1.1/16 TF**
26,988	*40*	*25*	*38,1*	*82*	*42,9*	*16,5*	*117,5*	*152*	*23,5*	*14*	*12*	*22,2*	
1 1/8	1.57	0.98	1.50	3.23	1.94	0.65	4.63	5.98	0.93	0.55	1/2	0.87	**SY 1.1/8 TF**
28,575	*40*	*25*	*38,1*	*82*	*49,2*	*16,5*	*117,5*	*152*	*23,5*	*14*	*12*	*22,2*	
1 3/16	1.57	0.98	1.50	3.23	1.69	0.65	4.63	5.98	0.93	0.55	1/2	0.87	**SY 1.3/16 TF**
30,163	*40*	*25*	*38,1*	*82*	*42,9*	*16,5*	*117,5*	*152*	*23,5*	*14*	*12*	*22,2*	
	1.57	0.98	1.50	3.23	1.69	0.65	4.63	5.98	0.93	0.55	1/2	0.87	**SY 1.3/16 TF/AH**
	40	*25*	*38,1*	*82*	*42,9*	*16,5*	*117,5*	*152*	*23,5*	*14*	*12*	*22,2*	

Designations Bearing unit	Separate components Housing	Bearing	**Basic load ratings** dynamic C	static C_0	**Fatigue load limit** P_u	**Limiting speed** with shaft tolerance h6	**Mass** Bearing unit
–			lbf/*kN*		lbf/*kN*	r/min	lb/*kg*
SY 1/2 TF	SY 503 U	YAR 203-008-2F	2 150 *9,56*	1 070 *4,75*	50 *0,2*	9 500	1.21 *0,55*
SYH 1/2 TF	SYH 503 U	YAR 203-008-2F	2 150 *9,56*	1 070 *4,75*	50 *0,2*	9 500	1.21 *0,55*
SY 3/4 TF	SY 504 M	YAR 204-012-2F	2 860 *12,7*	1 470 *6,55*	60 *0,28*	8 500	1.23 *0,56*
SYJ 3/4 TF	SYJ 504	YAR 204-012-2F	2 860 *12,7*	1 470 *6,55*	60 *0,28*	8 500	1.19 *0,54*
SY 5/8 TF	SY 503 U	YAR 203-010-2F	2 150 *9,56*	1 070 *4,75*	50 *0,2*	9 500	1.12 *0,51*
SY 13/16 TF	SY 505 U	YAR 205-013-2F	3 150 *14*	1 760 *7,8*	80 *0,335*	7 000	1.85 *0,84*
SY 7/8 TF	SY 505 U	YAR 205-014-2F	3 150 *14*	1 760 *7,8*	80 *0,335*	7 000	1.78 *0,81*
SY 15/16 TF	SY 505 U	YAR 205-015-2F	3 150 *14*	1 760 *7,8*	80 *0,335*	7 000	1.71 *0,78*
SY 1. TF	SY 505 M	YAR 205-100-2F	3 150 *14*	1 760 *7,8*	80 *0,335*	7 000	1.57 *0,71*
SY 1. TF/AH	SY 505 U/AH	YAR 205-100-2F/AH	3 150 *14*	1 760 *7,8*	80 *0,335*	7 000	1.59 *0,72*
SYJ 1. TF	SYJ 505	YAR 205-100-2F	3 150 *14*	1 760 *7,8*	80 *0,335*	7 000	1.61 *0,73*
SY 1. TR	SY 505 M	YAR 205-100-2RF	3 150 *14*	1 760 *7,8*	80 *0,335*	4 300	1.59 *0,72*
SY 1.1/16 TF	SY 506 U	YAR 206-101-2F	4 390 *19,5*	2 520 *11,2*	110 *0,475*	6 300	2.65 *1,20*
SY 1.1/8 TF	SY 506 U	YAR 206-102-2F	4 390 *19,5*	2 520 *11,2*	110 *0,475*	6 300	2.60 *1,20*
SY 1.3/16 TF	SY 506 U	YAR 206-103-2F	4 390 *19,5*	2 520 *11,2*	110 *0,475*	6 300	2.60 *1,20*
SY 1.3/16 TF/AH	SY 506 U/AH	YAR 206-103-2F/AH	4 390 *19,5*	2 520 *11,2*	110 *0,475*	6 300	2.60 *1,20*

Y-bearing plummer block units with a cast housing and grub screws, inch shafts
d **1 1/4 – 1 5/8** in

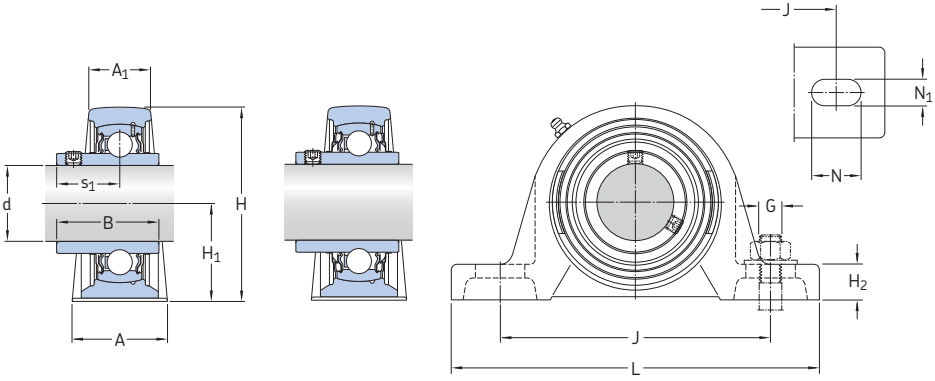

TF TR

Dimensions													Designation Bearing unit
d	A	A_1	B	H	H_1	H_2	J	L	N	N_1	G	s_1	
in/*mm*													–
1 1/4	1.77	1.06	1.69	3.66	1.87	0.75	4.96	6.30	0.83	0.55	1/2	1.00	**SY 1.1/4 TF**
31,75	*45*	*27*	*42,9*	*93*	*47,6*	*19*	*126*	*160*	*21*	*14*	*12*	*25,4*	
	1.81	1.10	1.69	3.66	1.87	0.67	5.08	6.57	0.94	0.67	5/8	1.00	**SYJ 1.1/4 TF**
	46	*28*	*42,9*	*93*	*47,6*	*17*	*129*	*167*	*24*	*17*	*14*	*25,4*	
	1.77	1.06	1.69	3.66	1.87	0.75	4.96	6.30	0.83	0.55	1/2	1.00	**SY 1.1/4 TR**
	45	*27*	*42,9*	*93*	*47,6*	*19*	*126*	*160*	*21*	*14*	*12*	*25,4*	
1 5/16	1.77	1.06	1.69	3.66	1.87	0.75	4.96	6.30	0.83	0.55	1/2	1.00	**SY 1.5/16 TF**
33,337	*45*	*27*	*42,9*	*93*	*47,6*	*19*	*126*	*160*	*21*	*14*	*12*	*25,4*	
1 3/8	1.77	1.06	1.69	3.66	1.87	0.75	4.96	6.30	0.83	0.55	1/2	1.00	**SY 1.3/8 TF**
34,925	*45*	*27*	*42,9*	*93*	*47,6*	*19*	*126*	*160*	*21*	*14*	*12*	*25,4*	
1 7/16	1.77	1.06	1.69	3.66	1.87	0.75	4.96	6.30	0.83	0.55	1/2	1.00	**SY 1.7/16 TF**
36,513	*45*	*27*	*42,9*	*93*	*47,6*	*19*	*126*	*160*	*21*	*14*	*12*	*25,4*	
	1.87	1.12	1.94	4.25	2.12	0.81	5.66	7.37	0.96	0.55	1/2	1.19	**SYM 1.7/16 TF**
	47,6	*28,6*	*49,2*	*108*	*54*	*20,6*	*143,7*	*187,5*	*24,5*	*14*	*12*	*30,2*	
1 1/2	1.89	1.18	1.94	3.90	1.94	0.75	5.33	6.89	0.96	0.55	1/2	1.19	**SY 1.1/2 TF**
38,1	*48*	*30*	*49,2*	*99*	*49,2*	*19*	*135,5*	*175*	*24,5*	*14*	*12*	*30,2*	
	1.89	1.18	1.94	3.90	1.94	0.75	5.33	6.89	0.96	0.55	1/2	1.19	**SY 1.1/2 TF/AH**
	48	*30*	*49,2*	*99*	*49,2*	*19*	*135,5*	*175*	*24,5*	*14*	*12*	*30,2*	
	1.93	1.22	1.94	3.90	1.94	0.71	5.37	7.24	1.00	0.67	9/16	1.19	**SYJ 1.1/2 TF**
	49	*31*	*49,2*	*99*	*49,2*	*18*	*136,5*	*184*	*25,5*	*17*	*14*	*30,2*	
	1.87	1.26	1.94	4.25	2.12	0.81	5.66	7.37	0.89	0.55	1/2	1.19	**SYM 1.1/2 TF**
	47,6	*32*	*49,2*	*108*	*54*	*20,6*	*143,7*	*187,5*	*22,7*	*14*	*12*	*30,2*	
	1.89	1.18	1.94	3.90	1.94	0.75	5.33	6.89	0.96	0.55	1/2	1.19	**SY 1.1/2 TR**
	48	*30*	*49,2*	*99*	*49,2*	*19*	*135,5*	*175*	*24,5*	*14*	*12*	*30,2*	
1 9/16	1.89	1.18	1.94	3.90	1.94	0.75	5.33	6.89	0.96	0.55	1/2	1.19	**SY 1.9/16 TF**
39,688	*48*	*30*	*49,2*	*99*	*49,2*	*19*	*135,5*	*175*	*24,5*	*14*	*12*	*30,2*	
1 5/8	1.90	1.26	1.94	4.22	2.12	0.81	5.66	7.36	0.89	0.55	1/2	1.19	**SY 1.5/8 TF**
41,275	*48,3*	*32*	*49,2*	*107*	*54*	*20,6*	*143,7*	*187*	*22,7*	*14*	*12*	*30,2*	

Designations Bearing unit	Separate components Housing	Bearing	**Basic load ratings** dynamic C	static C_0	**Fatigue load limit** P_u	**Limiting speed** with shaft tolerance h6	**Mass** Bearing unit
–			lbf/*kN*		lbf/*kN*	r/min	lb/*kg*
SY 1.1/4 TF	SY 507 M	YAR 207-104-2F	5 740 *25,5*	3 440 *15,3*	150 *0,655*	5 300	3.35 *1,50*
SYJ 1.1/4 TF	SYJ 507	YAR 207-104-2F	5 740 *25,5*	3 440 *15,3*	150 *0,655*	5 300	3.45 *1,55*
SY 1.1/4 TR	SY 507 M	YAR 207-104-2RF	5 740 *25,5*	3 440 *15,3*	150 *0,655*	3 200	3.35 *1,50*
SY 1.5/16 TF	SY 507 U	YAR 207-105-2F	5 740 *25,5*	3 440 *15,3*	150 *0,655*	5 300	3.65 *1,65*
SY 1.3/8 TF	SY 507 U	YAR 207-106-2F	5 740 *25,5*	3 440 *15,3*	150 *0,655*	5 300	3.35 *1,50*
SY 1.7/16 TF	SY 507 U	YAR 207-107-2F	5 740 *25,5*	3 440 *15,3*	150 *0,655*	5 300	3.50 *1,60*
SYM 1.7/16 TF	SYM 508 U	YAR 208-107-2F	6 910 *30,7*	4 280 *19*	180 *0,8*	4 800	5.35 *2,40*
SY 1.1/2 TF	SY 508 M	YAR 208-108-2F	6 910 *30,7*	4 280 *19*	180 *0,8*	4 800	4.10 *1,85*
SY 1.1/2 TF/AH	SY 508 U/AH	YAR 208-108-2F/AH	6 910 *30,7*	4 280 *19*	180 *0,8*	4 800	3.95 *1,80*
SYJ 1.1/2 TF	SYJ 508	YAR 208-108-2F	6 910 *30,7*	4 280 *19*	180 *0,8*	4 800	4.20 *1,90*
SYM 1.1/2 TF	SYM 509 U	YAR 209-108-2F	7 470 *33,2*	4 860 *21,6*	210 *0,915*	4 300	2.50 *2,55*
SY 1.1/2 TR	SY 508 M	YAR 208-108-2RF	6 910 *30,7*	4 280 *19*	180 *0,8*	2 800	4.10 *1,85*
SY 1.9/16 TF	SY 508 U	YAR 208-109-2F	6 910 *30,7*	4 280 *19*	180 *0,8*	4 300	4.25 *1,95*
SY 1.5/8 TF	SY 509 U	YAR 209-110-2F	7 470 *33,2*	4 860 *21,6*	210 *0,915*	4 300	5.45 *2,45*

Y-bearing plummer block units with a cast housing and grub screws, inch shafts
d **1 11/16 – 2 1/4** in

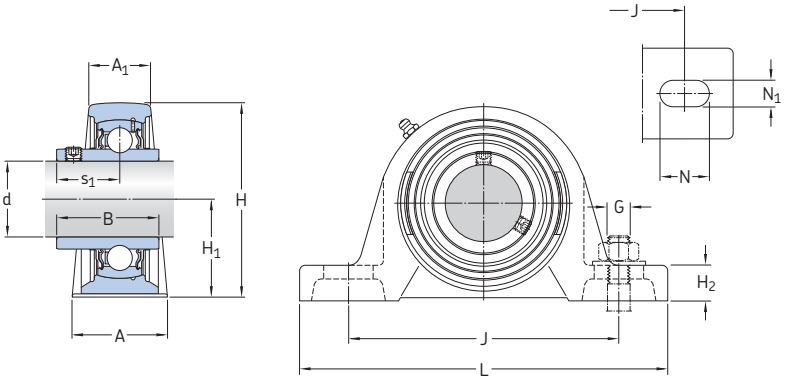

TF

Dimensions													Designation Bearing unit
d	A	A_1	B	H	H_1	H_2	J	L	N	N_1	G	s_1	
in/*mm*													–
1 11/16	1.90	1.26	1.94	4.22	2.12	0.81	5.66	7.36	0.89	0.55	1/2	1.19	**SY 1.11/16 TF**
42,862	*48,3*	*32*	*49,2*	*107*	*54*	*20,6*	*143,7*	*187*	*22,7*	*14*	*12*	*30,2*	
	1.90	1.26	1.94	4.22	2.12	0.81	5.66	7.36	0.89	0.55	1/2	1.19	**SY 1.11/16 TF/AH**
	48,3	*32*	*49,2*	*107*	*54*	*20,6*	*143,7*	*187*	*22,7*	*14*	*12*	*30,2*	
	2.12	1.38	2.03	4.50	2.25	0.87	6.19	7.99	1.02	0.71	5/8	1.28	**SYM 1.11/16 TF**
	54	*35*	*51,6*	*114,5*	*57,2*	*22,2*	*157,2*	*203*	*26*	*18*	*16*	*32,6*	
1 3/4	1.89	1.26	1.94	4.23	2.13	0.83	5.65	7.36	0.89	0.55	1/2	1.19	**SY 1.3/4 TF**
44,45	*48*	*32*	*49,2*	*107,5*	*54*	*21*	*143,5*	*187*	*22,5*	*14*	*12*	*30,2*	
	2.05	1.42	1.94	4.23	2.13	0.79	5.65	7.48	0.93	0.67	9/16	1.19	**SYJ 1.3/4 TF**
	52	*36*	*49,2*	*107,5*	*54*	*20*	*143,5*	*190*	*23,5*	*17*	*14*	*30,2*	
	2.13	1.34	2.03	4.49	2.25	0.87	6.18	7.99	1.02	0.71	5/8	1.28	**SYM 1.3/4 TF**
	54	*34*	*51,6*	*114*	*57,2*	*22*	*157*	*203*	*26*	*18*	*16*	*32,6*	
1 15/16	2.13	1.34	2.03	4.49	2.25	0.87	6.18	7.99	1.02	0.71	5/8	1.28	**SY 1.15/16 TF**
49,212	*54*	*34*	*51,6*	*114*	*57,2*	*22*	*157*	*203*	*26*	*18*	*16*	*32,6*	
	2.13	1.34	2.03	4.49	2.25	0.87	6.18	7.99	1.02	0.71	5/8	1.28	**SY 1.15/16 TF/AH**
	54	*34*	*51,6*	*114*	*57,2*	*22*	*157*	*203*	*26*	*18*	*16*	*32,6*	
	2.13	1.34	2.03	4.46	2.19	0.84	6.18	7.99	1.02	0.71	5/8	1.28	**SYH 1.15/16 TF**
	54	*34*	*51,6*	*113,5*	*55,6*	*21,4*	*157*	*203*	*26*	*18*	*16*	*32,6*	
	2.38	1.57	2.19	5.00	2.50	0.94	6.75	8.62	1.08	0.71	5/8	1.31	**SYM 1.15/16 TF**
	60,4	*40*	*55,6*	*127*	*63,5*	*23,8*	*171,5*	*219*	*27,5*	*18*	*16*	*33,4*	
2	2.36	1.57	2.19	4.96	2.50	0.94	6.75	8.62	1.08	0.71	5/8	1.31	**SY 2. TF**
50,8	*60*	*40*	*55,6*	*126*	*63,5*	*24*	*171,5*	*219*	*27,5*	*18*	*16*	*33,4*	
	2.36	1.57	2.19	4.96	2.50	0.94	6.75	8.62	1.08	0.79	5/8	1.31	**SYJ 2. TF**
	60	*40*	*55,6*	*126*	*63,5*	*24*	*171,5*	*219*	*27,5*	*20*	*16*	*33,4*	
	2.38	1.57	2.19	5.00	2.50	0.94	6.75	8.62	1.08	0.71	5/8	1.31	**SY 2. TF/AH**
	60,4	*40*	*55,6*	*127*	*63,5*	*23,8*	*171,5*	*219*	*27,5*	*18*	*16*	*33,4*	
2 3/16	2.38	1.57	2.19	5.00	2.50	0.94	6.75	8.62	1.08	0.71	5/8	1.31	**SY 2.3/16 TF**
55,563	*60,4*	*40*	*55,6*	*127*	*63,5*	*23,8*	*171,5*	*219*	*27,5*	*18*	*16*	*33,4*	
	2.38	1.57	2.19	5.00	2.50	0.94	6.75	8.62	1.08	0.71	5/8	1.31	**SY 2.3/16 TF/AH**
	60,4	*40*	*55,6*	*127*	*63,5*	*23,8*	*171,5*	*219*	*27,5*	*18*	*16*	*33,4*	
	2.36	1.65	2.56	5.50	2.75	1.02	7.50	9.45	1.16	0.71	5/8	1.56	**SYM 2.3/16 TF**
	60	*42*	*65,1*	*139,5*	*69,9*	*26*	*190,5*	*240*	*29,5*	*18*	*16*	*39,7*	
2 1/4	2.36	1.65	2.56	5.50	2.75	1.02	7.50	9.45	1.16	0.71	5/8	1.56	**SY 2.1/4 TF**
57,15	*60*	*42*	*65,1*	*139,5*	*69,9*	*26*	*190,5*	*240*	*29,5*	*18*	*16*	*39,7*	
	2.36	1.65	2.56	5.44	2.69	1.00	7.50	9.45	1.16	0.71	5/8	1.56	**SYH 2.1/4 TF**
	60	*42*	*65,1*	*138*	*68,3*	*25,4*	*190,5*	*240*	*29,5*	*18*	*16*	*39,7*	

Designations Bearing unit	Separate components Housing	Bearing	**Basic load ratings** dynamic C	static C_0	**Fatigue load limit** P_u	**Limiting speed** with shaft tolerance h6	**Mass** Bearing unit
–			lbf/*kN*		lbf/*kN*	r/min	lb/*kg*
SY 1.11/16 TF	SY 509 U	YAR 209-111-2F	7 470 *33,2*	4 860 *21,6*	210 *0,915*	4 300	5.30 *2,40*
SY 1.11/16 TF/AH	SY 509 U/AH	YAR 209-111-2F/AH	7 470 *33,2*	4 860 *21,6*	210 *0,915*	4 300	5.30 *2,40*
SYM 1.11/16 TF	SYM 510 U	YAR 210-111-2F	7 900 *35,1*	5 220 *23,2*	220 *0,98*	4 000	6.60 *3,00*
SY 1.3/4 TF	SY 509 M	YAR 209-112-2F	7 470 *33,2*	4 860 *21,6*	210 *0,915*	4 300	4.85 *2,20*
SYJ 1.3/4 TF	SYJ 509	YAR 209-112-2F	7 470 *33,2*	4 860 *21,6*	210 *0,915*	4 300	5.30 *2,40*
SYM 1.3/4 TF	SY 510 U	YAR 210-112-2F	7 900 *35,1*	5 220 *23,2*	220 *0,98*	4 000	6.75 *3,05*
SY 1.15/16 TF	SY 510 U	YAR 210-115-2F	7 900 *35,1*	5 220 *23,2*	220 *0,98*	4 000	6.30 *2,85*
SY 1.15/16 TF/AH	SY 510 U/AH	YAR 210-115-2F/AH	7 900 *35,1*	5 220 *23,2*	220 *0,98*	4 000	6.30 *2,85*
SYH 1.15/16 TF	SYH 510 U	YAR 210-115-2F	7 900 *35,1*	5 220 *23,2*	220 *0,98*	4 000	6.45 *2,90*
SYM 1.15/16 TF	SY 511 U	YAR 211-115-2F	9 810 *43,6*	6 530 *29*	280 *1,25*	3 600	8.80 *4,00*
SY 2. TF	SY 511 M	YAR 211-200-2F	9 810 *43,6*	6 530 *29*	280 *1,25*	3 600	8.25 *3,75*
SYJ 2. TF	SYJ 511	YAR 211-200-2F	9 810 *43,6*	6 530 *29*	280 *1,25*	3 600	8.50 *3,85*
SY 2. TF/AH	SY 511 U/AH	YAR 211-200-2F/AH	9 810 *43,6*	6 530 *29*	280 *1,25*	3 600	8.80 *4,00*
SY 2.3/16 TF	SY 511 U	YAR 211-203-2F	9 810 *43,6*	6 530 *29*	280 *1,25*	3 600	7.95 *3,60*
SY 2.3/16 TF/AH	SY 511 U/AH	YAR 211-203-2F/AH	9 810 *43,6*	6 530 *29*	280 *1,25*	3 600	8.40 *3,80*
SYM 2.3/16 TF	SY 512 U	YAR 212-203-2F	11 860 *52,7*	8 100 *36*	340 *1,53*	3 400	12.0 *5,45*
SY 2.1/4 TF	SY 512 U	YAR 212-204-2F	11 860 *52,7*	8 100 *36*	340 *1,53*	3 400	12.0 *5,45*
SYH 2.1/4 TF	SYH 512 U	YAR 212-204-2F	11 860 *52,7*	8 100 *36*	340 *1,53*	3 400	10.4 *4,70*

Y-bearing plummer block units with a cast housing and grub screws, inch shafts
d **2 7/16 – 3** in

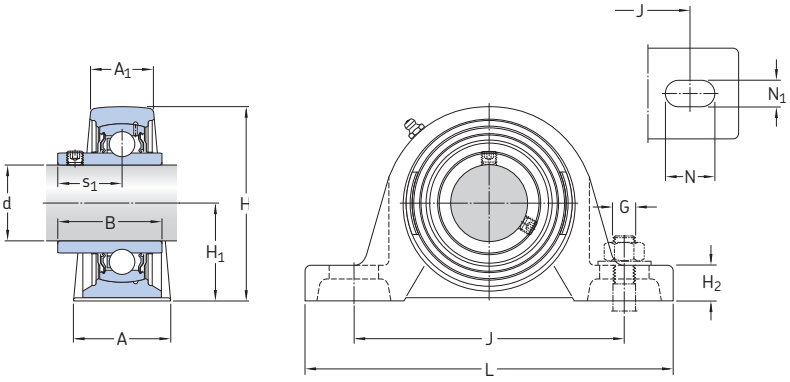

TF

Dimensions													Designation Bearing unit
d	A	A_1	B	H	H_1	H_2	J	L	N	N_1	G	s_1	
in/*mm*													–
2 7/16	2.36	1.65	2.56	5.50	2.75	1.02	7.50	9.45	1.16	0.71	5/8	1.56	**SY 2.7/16 TF**
61,913	*60*	*42*	*65,1*	*139,5*	*69,9*	*26*	*190,5*	*240*	*29,5*	*18*	*16*	*39,7*	
	2.36	1.65	2.56	5.44	2.69	1.00	7.50	9.45	1.16	0.71	5/8	1.56	**SYH 2.7/16 TF**
	60	*42*	*65,1*	*138*	*68,3*	*25,4*	*190,5*	*240*	*29,5*	*18*	*16*	*39,7*	
	2.56	1.73	2.75	6.04	3.00	1.50	8.00	10.24	1.16	0.87	3/4	1.56	**SYM 2.7/16 TF**
	65	*44*	*69,9*	*153,5*	*76,2*	*38,1*	*203,2*	*260*	*29,5*	*22*	*20*	*39,7*	
2 1/2	2.56	1.73	2.69	5.94	3.00	1.14	7.99	10.12	1.38	0.87	3/4	1.69	**SY 2.1/2 TF**
63,5	*65*	*44*	*68,3*	*151*	*76,2*	*29*	*203*	*257*	*35*	*22*	*20*	*42,9*	
	2.76	1.93	2.69	5.94	3.00	1.06	7.99	10.43	1.38	0.98	3/4	1.69	**SYJ 2.1/2 TF**
	70	*49*	*68,3*	*151*	*76,2*	*27*	*203*	*265*	*35*	*25*	*20*	*42,9*	
	2.56	1.73	2.75	6.04	3.00	1.54	8.00	10.24	1.16	0.87	3/4	1.56	**SYM 2.1/2 TF**
	65	*44*	*69,9*	*153,5*	*76,2*	*39,1*	*203,2*	*260*	*29,5*	*22*	*20*	*39,7*	
2 11/16	2.56	1.73	2.69	5.87	3.00	1.14	7.99	10.12	1.38	0.87	3/4	1.69	**SY 2.11/16 TF**
68,263	*65*	*44*	*68,3*	*149*	*76,2*	*29*	*203*	*257*	*35*	*22*	*20*	*42,9*	
	3.00	1.89	2.88	6.97	3.50	1.86	9.00	12	1.38	0.88	3/4	1.81	**SYM 2.11/16 TF**
	76,2	*48*	*73,1*	*177*	*88,9*	*47,2*	*228,6*	*305*	*35*	*22,2*	*20*	*46,1*	
2 3/4	2.82	1.89	2.88	6.54	3.25	1.29	8.50	10.98	1.38	0.88	3/4	1.81	**SY 2.3/4 TF**
69,85	*71,6*	*48*	*73,1*	*166*	*82,6*	*32,8*	*215,9*	*279*	*35*	*22,2*	*20*	*46,1*	
2 15/16	2.82	1.89	3.07	6.54	3.25	1.29	8.50	10.98	1.38	0.88	3/4	1.81	**SY 2.15/16 TF**
74,613	*71,6*	*48*	*77,9*	*166*	*82,6*	*32,8*	*215,9*	*279*	*35*	*22,2*	*20*	*46,1*	
	3.07	2.05	3.07	6.97	3.50	1.87	9.00	12	1.38	0.88	3/4	1.88	**SYM 2.15/16 TF**
	78	*52*	*77,9*	*177*	*88,9*	*47,6*	*228,6*	*305*	*35*	*22,2*	*20*	*47,7*	
3	3.07	2.05	3.07	6.97	3.50	1.87	9.00	12	1.38	0.88	3/4	1.88	**SYM 3. TF**
76,2	*78*	*52*	*77,9*	*177*	*88,9*	*47,6*	*228,6*	*305*	*35*	*22,2*	*20*	*47,7*	

Designations Bearing unit	Separate components Housing	Bearing	**Basic load ratings** dynamic C	static C_0	**Fatigue load limit** P_u	**Limiting speed** with shaft tolerance h6	**Mass** Bearing unit
–			lbf/*kN*		lbf/*kN*	r/min	lb/*kg*
SY 2.7/16 TF	SY 512 U	YAR 212-207-2F	11 860 *52,7*	8 100 *36*	340 *1,53*	3 400	10.0 *4,55*
SYH 2.7/16 TF	SYH 512 U	YAR 212-207-2F	11 860 *52,7*	8 100 *36*	340 *1,53*	3 400	10.3 *4,65*
SYM 2.7/16 TF	SY 514 U	YAR 214-207-2F	14 040 *62,4*	9 900 *44*	420 *1,86*	2 800	16.0 *7,25*
SY 2.1/2 TF	SY 513 M	YAR 213-208-2F	12 870 *57,2*	9 000 *40*	380 *1,7*	3 000	12.8 *5,80*
SYJ 2.1/2 TF	SYJ 513	YAR 213-208-2F	12 870 *57,2*	9 000 *40*	380 *1,7*	3 000	13.8 *6,25*
SYM 2.1/2 TF	SY 514 U	YAR 214-208-2F	14 040 *62,4*	9 900 *44*	420 *1,86*	2 800	15.4 *7,00*
SY 2.11/16 TF	SY 513 U	YAR 213-211-2F	12 870 *57,2*	9 000 *40*	380 *1,7*	3 000	12.5 *5,70*
SYM 2.11/16 TF	SYM 515 U	YAR 215-211-2F	14 920 *66,3*	11 030 *49*	460 *2,04*	2 600	23.8 *10,8*
SY 2.3/4 TF	SY 515 U	YAR 215-212-2F	14 920 *66,3*	11 030 *49*	460 *2,04*	2 600	17.7 *8,00*
SY 2.15/16 TF	SY 515 U	YAR 215-215-2F	16 380 *72,8*	11 930 *53*	460 *2,04*	2 400	16.6 *7,55*
SYM 2.15/16 TF	SY 516 U	YAR 216-215-2F	16 380 *72,8*	11 930 *53*	490 *2,16*	2 400	22.8 *10,3*
SYM 3. TF	SY 516 U	YAR 216-300-2F	16 380 *72,8*	11 930 *53*	490 *2,16*	2 400	22.4 *10,2*

Y-bearing plummer block units with a cast housing and an eccentric locking collar, metric shafts

d **15 – 60** mm

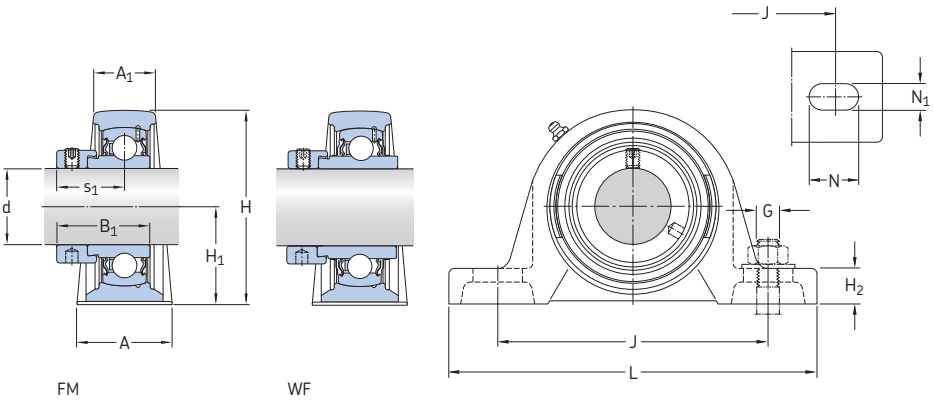

FM WF

Dimensions													Basic load ratings dynamic	static	Fatigue load limit	Limiting speed with shaft tolerance h6	Designation Bearing unit
d	A	A_1	B_1	H	H_1	H_2	J	L	N	N_1	G	s_1	C	C_0	P_u		
mm													kN		kN	r/min	–
15	32	18	28,6	57	30,2	14	97	127	20,5	11,5	10	22,1	9,56	4,75	0,2	9 500	**SY 15 FM**
17	32	18	28,6	57	30,2	14	97	127	20,5	11,5	10	22,1	9,56	4,75	0,2	9 500	**SY 17 FM**
20	32	21	31	65	33,3	14	97	127	20,5	11,5	10	23,5	12,7	6,55	0,28	8 500	**SY 20 FM**
	32	21	43,7	65	33,3	14	97	127	20,5	11,5	10	26,6	12,7	6,55	0,28	8 500	**SY 20 WF**
25	36	22	31	70,5	36,5	16	102	130	19,5	11,5	10	23,5	14	7,8	0,335	7 000	**SY 25 FM**
	36	22	44,4	70,5	36,5	16	102	130	19,5	11,5	10	26,9	14	7,8	0,335	7 000	**SY 25 WF**
30	40	25	35,7	82,5	42,9	17	117,5	152	23,5	14	12	26,7	19,5	11,2	0,475	6 300	**SY 30 FM**
	40	25	48,4	82,5	42,9	17	117,5	152	23,5	14	12	30,1	19,5	11,2	0,475	6 300	**SY 30 WF**
35	45	27	38,9	93	47,6	19	126	160	21	14	12	29,4	25,5	15,3	0,655	5 300	**SY 35 FM**
	45	27	51,1	93	47,6	19	126	160	21	14	12	32,3	25,5	15,3	0,655	5 300	**SY 35 WF**
40	48	30	43,7	99	49,2	19	135,5	175	24,5	14	12	32,7	30,7	19	0,8	4 800	**SY 40 FM**
	48	30	56,3	99	49,2	19	135,5	175	24,5	14	12	34,9	30,7	19	0,8	4 800	**SY 40 WF**
45	48	32	43,7	107,5	54	21	143,5	187	22,5	14	12	32,7	33,2	21,6	0,915	4 300	**SY 45 FM**
	48	32	56,3	107,5	54	21	143,5	187	22,5	14	12	34,9	33,2	21,6	0,915	4 300	**SY 45 WF**
50	54	34	43,7	114,5	57,2	22	157	203	26	18	16	32,7	35,1	23,2	0,98	4 000	**SY 50 FM**
	54	34	62,7	114,5	57,2	22	157	203	26	18	16	38,1	35,1	23,2	0,98	4 000	**SY 50 WF**
55	60	40	48,4	126	63,5	24	171,5	219	27,5	18	16	36,4	43,6	29	1,25	3 600	**SY 55 FM**
	60	40	71,4	126	63,5	24	171,5	219	27,5	18	16	43,6	43,6	29	1,25	3 600	**SY 55 WF**
60	60	42	53,1	138	69,9	26,5	190,5	240	29,5	18	16	39,6	52,7	36	1,53	3 400	**SY 60 FM**
	60	42	77,8	138	69,9	26,5	190,5	240	29,5	18	16	46,8	52,7	36	1,53	3 400	**SY 60 WF**

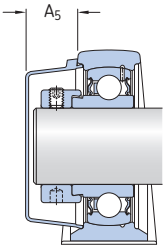

Designations Bearing unit	Separate components Housing	Bearing	**Mass** Bearing unit	**Appropriate end cover** Designation	Dimension A_5
–			kg	–	mm
SY 15 FM	SY 503 M	YET 203/15	0,53	–	–
SY 17 FM	SY 503 M	YET 203	0,52	–	–
SY 20 FM	SY 504 M	YET 204	0,59	ECY 204	18,5
SY 20 WF	SY 504 M	YEL 204-2F	0,62	ECY 204	18,5
SY 25 FM	SY 505 M	YET 205	0,73	ECY 205	18
SY 25 WF	SY 505 M	YEL 205-2F	0,78	ECY 205	18
SY 30 FM	SY 506 M	YET 206	1,10	ECY 206	20
SY 30 WF	SY 506 M	YEL 206-2F	1,20	ECY 206	20
SY 35 FM	SY 507 M	YET 207	1,55	ECY 207	22
SY 35 WF	SY 507 M	YEL 207-2F	1,60	ECY 207	22
SY 40 FM	SY 508 M	YET 208	1,85	ECY 208	23,5
SY 40 WF	SY 508 M	YEL 208-2F	1,95	ECY 208	23,5
SY 45 FM	SY 509 M	YET 209	2,25	ECY 209	23
SY 45 WF	SY 509 M	YEL 209-2F	2,35	ECY 209	23
SY 50 FM	SY 510 M	YET 210	2,75	ECY 210	29,5
SY 50 WF	SY 510 M	YEL 210-2F	2,90	ECY 210	29,5
SY 55 FM	SY 511 M	YET 211	3,65	ECY 211	34
SY 55 WF	SY 511 M	YEL 211-2F	3,90	ECY 211	34
SY 60 FM	SY 512 M	YET 212	4,45	ECY 212	35,5
SY 60 WF	SY 512 M	YEL 212-2F	4,75	ECY 212	35,5

Y-bearing plummer block units with a cast housing and an eccentric locking collar, inch shafts

d **1/2 – 1 5/16** in

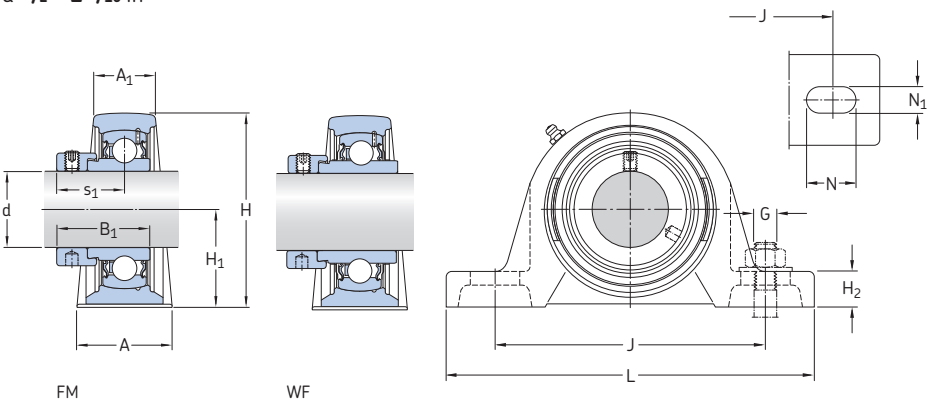

Dimensions													Designation Bearing unit
d	A	A_1	B_1	H	H_1	H_2	J	L	N	N_1	G	s_1	
in/*mm*													–
1/2	1.26	0.71	1.13	2.21	1.19	0.55	3.82	5.00	0.81	0.45	3/8	0.87	**SY 1/2 FM**
12,7	*32*	*18*	*28,6*	*56*	*30,2*	*14*	*97*	*127*	*20,5*	*11,5*	*10*	*22,1*	
3/4	1.26	0.83	1.22	2.52	1.31	0.55	3.82	5.00	0.81	0.45	3/8	0.94	**SY 3/4 FM**
19,05	*32*	*21*	*31*	*64*	*33,3*	*14*	*97*	*127*	*20,5*	*11,5*	*10*	*24*	
	1.26	0.83	1.72	2.46	1.25	0.49	3.82	5.00	0.81	0.45	3/8	1.05	**SYH 3/4 WF**
	32	*21*	*43,7*	*62,5*	*31,8*	*12,5*	*97*	*127*	*20,5*	*11,5*	*10*	*26,6*	
15/16	1.42	0.87	1.22	2.76	1.44	0.63	4.02	5.12	0.77	0.45	3/8	0.93	**SY 15/16 FM**
23,813	*36*	*22*	*31*	*70*	*36,5*	*16*	*102*	*130*	*19,5*	*11,5*	*10*	*23,5*	
1	1.42	0.87	1.22	2.63	1.31	0.51	4.02	5.12	0.77	0.45	3/8	0.93	**SYH 1. FM**
25,4	*36*	*22*	*31*	*67*	*33,4*	*12,9*	*102*	*130*	*19,5*	*11,5*	*10*	*23,5*	
	1.42	0.87	1,75	2.63	1.31	0.51	4.02	5.12	0.77	0.45	3/8	1.06	**SYH 1. WF**
	36	*22*	*44,4*	*67*	*33,4*	*12,9*	*102*	*130*	*19,5*	*11,5*	*10*	*26,9*	
1 1/8	1.57	0.98	1.41	3.23	1.69	0.65	4.63	5.98	0.93	0.55	1/2	1.05	**SY 1.1/8 FM**
28,575	*40*	*25*	*35,7*	*82*	*42,9*	*16,5*	*117,5*	*152*	*23,5*	*14*	*12*	*26,7*	
	1.57	0.98	1.91	3.14	1.56	0.58	4.63	5.98	0.93	0.55	1/2	1.19	**SYH 1.1/8 WF**
	40	*25*	*48,4*	*80*	*39,7*	*14,8*	*117,5*	*152*	*23,5*	*14*	*12*	*30,1*	
1 3/16	1.57	0.98	1.41	3.23	1.69	0.65	4.63	5.98	0.93	0.55	1/2	1.05	**SY 1.3/16 FM**
30,163	*40*	*25*	*35,7*	*82*	*42,9*	*16,5*	*117,5*	*152*	*23,5*	*14*	*12*	*26,7*	
	1.57	0.98	1.41	3.14	1.56	0.58	4.63	5.98	0.93	0.55	1/2	1.05	**SYH 1.3/16 FM**
	40	*25*	*35,7*	*80*	*39,7*	*14,8*	*117,5*	*152*	*23,5*	*14*	*12*	*26,7*	
	1.57	0.98	1.91	3.14	1.56	0.58	4.63	5.98	0.93	0.55	1/2	1.19	**SYH 1.3/16 WF**
	40	*25*	*48,4*	*80*	*39,7*	*14,8*	*117,5*	*152*	*23,5*	*14*	*12*	*30,1*	
1 1/4	1.77	1.06	1.53	3.66	1.87	0.75	4.96	6.30	0.83	0.55	1/2	1.16	**SY 1.1/4 FM**
31,75	*45*	*27*	*38,9*	*93*	*47,6*	*19*	*126*	*160*	*21*	*14*	*12*	*29,4*	
	1.77	1.06	1.53	3.60	1.81	0.69	4.96	6.30	0.83	0.55	1/2	1.16	**SYH 1.1/4 FM**
	45	*27*	*38,9*	*91,5*	*46,1*	*17,5*	*126*	*160*	*21*	*14*	*12*	*29,4*	
	1.77	1.06	2.01	3.60	1.81	0.69	4.96	6.30	0.83	0.55	1/2	1.27	**SYH 1.1/4 WF**
	45	*27*	*51,1*	*91,5*	*46,1*	*17,5*	*126*	*160*	*21*	*14*	*12*	*32,3*	
1 5/16	1.77	1.06	1.53	3.66	1.87	0.75	4.96	6.30	0.83	0.55	1/2	1.16	**SY 1.5/16 FM**
33,338	*45*	*27*	*38,9*	*93*	*47,6*	*19*	*126*	*160*	*21*	*14*	*12*	*29,4*	

Designations Bearing unit	Separate components Housing	Bearing	**Basic load ratings** dynamic C	static C_0	**Fatigue load limit** P_u	**Limiting speed** with shaft tolerance h6	**Mass** Bearing unit
–			lbf/*kN*		lbf/*kN*	r/min	lb/*kg*
SY 1/2 FM	SY 503 U	YET 203-008	2 150 *9,56*	1 070 *4,75*	50 *0,2*	9 500	1.32 *0,60*
SY 3/4 FM	SY 504 U	YET 204-012	2 860 *12,7*	1 470 *6,55*	60 *0,28*	8 500	1.37 *0,62*
SYH 3/4 WF	SYH 504 U	YEL 204-012-2F	2 860 *12,7*	1 470 *6,55*	60 *0,28*	8 500	1.45 *0,66*
SY 15/16 FM	SY 505 U	YET 205-015	3 150 *14*	1 760 *7,8*	80 *0,335*	7 000	1.65 *0,75*
SYH 1. FM	SYH 505 U	YET 205-100	3 150 *14*	1 760 *7,8*	80 *0,335*	7 000	1.63 *0,74*
SYH 1. WF	SYH 505 U	YEL 205-100-2F	3 150 *14*	1 760 *7,8*	80 *0,335*	7 000	1.73 *0,79*
SY 1.1/8 FM	SY 506 U	YET 206-102	4 390 *19,5*	2 520 *11,2*	110 *0,475*	6 300	2.45 *1,10*
SYH 1.1/8 WF	SYH 506 U	YEL 206-102-2F	4 390 *19,5*	2 520 *11,2*	110 *0,475*	6 300	3.20 *1,45*
SY 1.3/16 FM	SY 506 U	YET 206-103	4 390 *19,5*	2 520 *11,2*	110 *0,475*	6 300	2.45 *1,10*
SYH 1.3/16 FM	SYH 506 U	YET 206-103	4 390 *19,5*	2 520 *11,2*	110 *0,475*	6 300	2.55 *1,15*
SYH 1.3/16 WF	SYH 506 U	YEL 206-103-2F	4 390 *19,5*	2 520 *11,2*	110 *0,475*	6 300	2.65 *1,20*
SY 1.1/4 FM	SY 507 U	YET 207-104	5 740 *25,5*	3 440 *15,3*	150 *0,655*	5 300	3.75 *1,70*
SYH 1.1/4 FM	SYH 507 U	YET 207-104	5 740 *25,5*	3 440 *15,3*	150 *0,655*	5 300	3.55 *1,60*
SYH 1.1/4 WF	SYH 507 U	YEL 207-104-2F	5 740 *25,5*	3 440 *15,3*	150 *0,655*	5 300	4.10 *1,85*
SY 1.5/16 FM	SY 507 U	YET 207-105	5 740 *25,5*	3 440 *15,3*	150 *0,655*	5 300	3.65 *1,65*

Y-bearing plummer block units with a cast housing and an eccentric locking collar, inch shafts

d **1 3/8 – 2** in

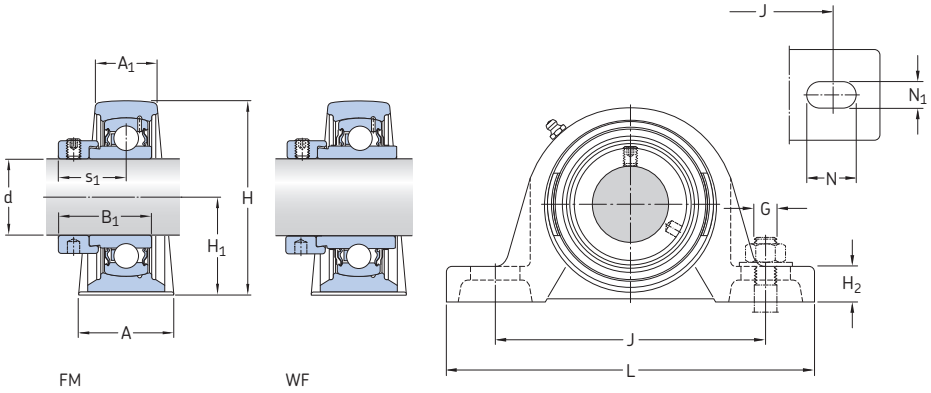

Dimensions													Designation Bearing unit
d	A	A_1	B_1	H	H_1	H_2	J	L	N	N_1	G	s_1	
in/*mm*													–
1 3/8	1.77	1.06	1.53	3.66	1.87	0.75	4.96	6.30	0.83	0.55	1/2	1.16	**SY 1.3/8 FM**
34,925	*45*	*27*	*38,9*	*93*	*47,6*	*19*	*126*	*160*	*21*	*14*	*12*	*29,4*	
	1.77	1.06	2.01	3.60	1.81	0.69	4.96	6.30	0.83	0.55	1/2	1.27	**SYH 1.3/8 WF**
	45	*27*	*51,1*	*91,5*	*46,1*	*17,5*	*126*	*160*	*21*	*14*	*12*	*32,3*	
1 7/16	1.77	1.06	1.53	3.66	1.87	0.75	4.96	6.30	0.83	0.55	1/2	1.16	**SY 1.7/16 FM**
36,513	*45*	*27*	*38,9*	*93*	*47,6*	*19*	*126*	*160*	*21*	*14*	*12*	*29,4*	
	1.77	1.06	2.01	3.66	1.87	0.75	4.96	6.30	0.83	0.55	1/2	1.27	**SY 1.7/16 WF**
	45	*27*	*51,1*	*93*	*47,6*	*19*	*126*	*160*	*21*	*14*	*12*	*32,3*	
	1.77	1.06	1.53	3.60	1.81	0.69	4.96	6.30	0.83	0.55	1/2	1.16	**SYH 1.7/16 FM**
	45	*27*	*38,9*	*91,5*	*46,1*	*17,5*	*126*	*160*	*21*	*14*	*12*	*29,4*	
	1.77	1.06	2.01	3.60	1.81	0.69	4.96	6.30	0.83	0.55	1/2	1.27	**SYH 1.7/16 WF**
	45	*27*	*51,1*	*91,5*	*46,1*	*17,5*	*126*	*160*	*21*	*14*	*12*	*32,3*	
1 1/2	1.89	1.18	1.72	3.90	1.94	0.75	5.33	6.89	0.96	0.55	1/2	1.31	**SY 1.1/2 FM**
38,1	*48*	*30*	*43,7*	*99*	*49,2*	*19*	*135,5*	*175*	*24,5*	*14*	*12*	*33,2*	
	1.89	1.18	2.22	3.90	1.94	0.75	5.33	6.89	0.96	0.55	1/2	1.37	**SYH 1.1/2 WF**
	48	*30*	*56,3*	*99*	*49,2*	*19*	*135,5*	*175*	*24,5*	*14*	*12*	*34,9*	
1 11/16	1.90	1.26	1.72	4.22	2.12	0.81	5.66	7.36	0.89	0.55	1/2	1.29	**SY 1.11/16 FM**
42,863	*48,3*	*32*	*43,7*	*107*	*54*	*20,6*	*143,7*	*187*	*22,7*	*14*	*12*	*32,7*	
	1.90	1.26	2.22	4.16	2.06	0.79	5.66	7.36	0.89	0.55	1/2	1.37	**SYH 1.11/16 WF**
	48,3	*32*	*56,3*	*105,5*	*52,4*	*20*	*143,7*	*187*	*22,7*	*14*	*12*	*34,9*	
1 3/4	1.90	1.26	1.72	4.22	2.12	0.81	5.66	7.36	0.89	0.55	1/2	1.29	**SY 1.3/4 FM**
44,45	*48,3*	*32*	*43,7*	*107*	*54*	*20,6*	*143,7*	*187*	*22,7*	*14*	*12*	*32,7*	
	1.90	1.26	2.22	4.16	2.06	0.79	5.66	7.36	0.89	0.55	1/2	1.37	**SYH 1.3/4 WF**
	48,3	*32*	*56,3*	*105,5*	*52,4*	*20*	*143,7*	*187*	*22,7*	*14*	*12*	*34,9*	
1 15/16	2.13	1.34	1.72	4.49	2.25	0.87	6.18	7.99	1.02	0.71	5/8	1.29	**SY 1.15/16 FM**
49,213	*54*	*34*	*43,7*	*114*	*57,2*	*22*	*157*	*203*	*26*	*18*	*16*	*32,7*	
	2.13	1.34	2.47	4.49	2.25	0.87	6.18	7.99	1.02	0.71	5/8	1.50	**SY 1.15/16 WF**
	54	*34*	*62,7*	*114*	*57,2*	*22*	*157*	*203*	*26*	*18*	*16*	*38,1*	
	2.13	1.34	2.47	4.46	2.19	0.84	6.18	7.99	1.02	0.71	5/8	1.50	**SYH 1.15/16 WF**
	54	*34*	*62,7*	*113,5*	*55,6*	*21,4*	*157*	*203*	*26*	*18*	*16*	*38,1*	
2	2.38	1.57	1.91	5.00	2.50	0.94	6.75	8.63	1.08	0.71	5/8	1.41	**SY 2. FM**
50,8	*60,4*	*40*	*48,4*	*127*	*63,5*	*23,8*	*171,5*	*219*	*27,5*	*18*	*16*	*35,9*	
	2.38	1.57	1.91	4.98	2.44	0.92	6.75	8.63	1.08	0.71	5/8	1.41	**SYH 2. FM**
	60,4	*40*	*48,4*	*126,5*	*61,9*	*23,3*	*171,5*	*219*	*27,5*	*18*	*16*	*35,9*	
	2.38	1.57	2.81	4.98	2.44	0.92	6.75	8.63	1.08	0.71	5/8	1.72	**SYH 2. WF**
	60,4	*40*	*71,4*	*126,5*	*61,9*	*23,3*	*171,5*	*219*	*27,5*	*18*	*16*	*43,6*	

Designations Bearing unit	Separate components Housing	Bearing	**Basic load ratings** dynamic C	static C_0	**Fatigue load limit** P_u	**Limiting speed** with shaft tolerance h6	**Mass** Bearing unit
–			lbf/*kN*		lbf/*kN*	r/min	lb/*kg*
SY 1.3/8 FM	SY 507 U	YET 207-106	5 740 *25,5*	3 440 *15,3*	150 *0,655*	5 300	3.65 *1,65*
SYH 1.3/8 WF	SYH 507 U	YEL 207-106-2F	5 740 *25,5*	3 440 *15,3*	150 *0,655*	5 300	3.95 *1,80*
SY 1.7/16 FM	SY 507 U	YET 207-107	5 740 *25,5*	3 440 *15,3*	150 *0,655*	5 300	3.60 *1,63*
SY 1.7/16 WF	SY 507 U	YEL 207-107-2F	5 740 *25,5*	3 440 *15,3*	150 *0,655*	5 300	3.75 *1,70*
SYH 1.7/16 FM	SYH 507 U	YET 207-107	5 740 *25,5*	3 440 *15,3*	150 *0,655*	5 300	3.40 *1,55*
SYH 1.7/16 WF	SYH 507 U	YEL 207-107-2F	5 740 *25,5*	3 440 *15,3*	150 *0,655*	5 300	3.65 *1,65*
SY 1.1/2 FM	SY 508 U	YET 208-108	6 910 *30,7*	4 280 *19*	180 *0,8*	4 800	3.95 *1,80*
SYH 1.1/2 WF	SYH 508 U	YEL 208-108-2F	6 910 *30,7*	4 280 *19*	180 *0,8*	4 800	4.50 *2,05*
SY 1.11/16 FM	SY 509 U	YET 209-111	7 470 *33,2*	4 860 *21,6*	210 *0,915*	4 300	5.05 *2,30*
SYH 1.11/16 WF	SYH 509 U	YEL 209-111-2F	7 470 *33,2*	4 860 *21,6*	210 *0,915*	4 300	5.85 *2,65*
SY 1.3/4 FM	SY 509 U	YET 209-112	7 470 *33,2*	4 860 *21,6*	210 *0,915*	4 300	4.95 *2,25*
SYH 1.3/4 WF	SYH 509 U	YEL 209-112-2F	7 470 *33,2*	4 860 *21,6*	210 *0,915*	4 300	5.30 *2,40*
SY 1.15/16 FM	SY 510 U	YET 210-115	7 900 *35,1*	5 220 *23,2*	220 *0,98*	4 000	6.05 *2,75*
SY 1.15/16 WF	SY 510 U	YEL 210-115-2F	7 900 *35,1*	5 220 *23,2*	220 *0,98*	4 000	6.50 *2,95*
SYH 1.15/16 WF	SYH 510 U	YEL 210-115-2F	7 900 *35,1*	5 220 *23,2*	220 *0,98*	4 000	6.50 *2,95*
SY 2. FM	SY 511 U	YET 211-200	9 810 *43,6*	6 530 *29*	280 *1,25*	3 600	8.40 *3,80*
SYH 2. FM	SYH 511 U	YET 211-200	9 810 *43,6*	6 530 *29*	280 *1,25*	3 600	8.80 *4,00*
SYH 2. WF	SYH 511 U	YEL 211-200-2F	9 810 *43,6*	6 530 *29*	280 *1,25*	3 600	9.25 *4,20*

Y-bearing plummer block units with a cast housing and an eccentric locking collar, inch shafts

d **2 3/16 – 2 7/16** in

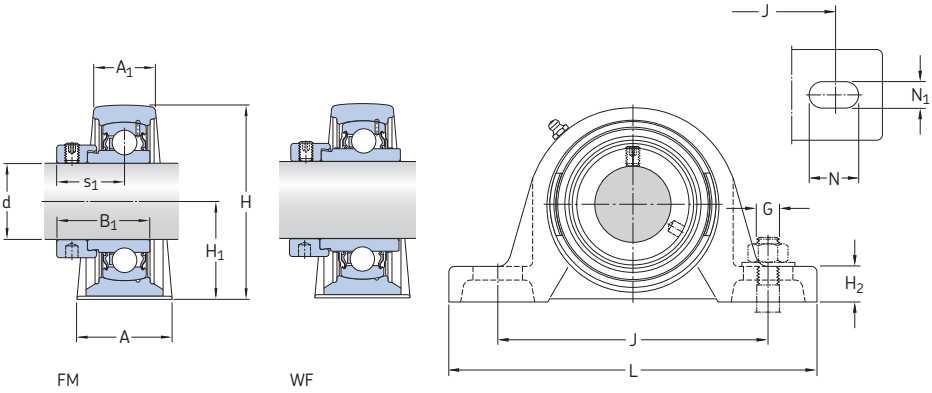

Dimensions													Designation Bearing unit
d	A	A_1	B_1	H	H_1	H_2	J	L	N	N_1	G	s_1	
in/*mm*													–
2 3/16	2.38	1.57	1.91	5.00	2.50	0.94	6.75	8.63	1.08	0.71	5/8	1.41	**SY 2.3/16 FM**
55,563	*60,4*	*40*	*48,4*	*127*	*63,5*	*23,8*	*171,5*	*219*	*27,5*	*18*	*16*	*35,9*	
	2.38	1.57	2.81	4.98	2.44	0.92	6.75	8.63	1.08	0.71	5/8	1.72	**SYH 2.3/16 WF**
	60,4	*40*	*71,4*	*126,5*	*61,9*	*23,3*	*171,5*	*219*	*27,5*	*18*	*16*	*43,6*	
2 7/16	2.36	1.65	3.06	5.50	2.75	1.02	7.50	9.45	1.15	0.71	5/8	1.84	**SYH 2.7/16 WF**
61,913	*60*	*42*	*77,8*	*139,5*	*69,9*	*26*	*190,5*	*240*	*29,1*	*18*	*16*	*46,7*	

Designations Bearing unit	Separate components Housing	 Bearing	**Basic load ratings** dynamic C	 static C_0	**Fatigue load limit** P_u	**Limiting speed** with shaft tolerance h6	**Mass** Bearing unit
–			lbf/*kN*		lbf/*kN*	r/min	lb/*kg*
SY 2.3/16 FM	SY 511 U	YET 211-203	9 810 *43,6*	6 530 *29*	280 *1,25*	3 600	8.05 *3,65*
SYH 2.3/16 WF	SYH 511 U	YEL 211-203-2F	9 810 *43,6*	6 530 *29*	280 *1,25*	3 600	8.70 *3,95*
SYH 2.7/16 WF	SYH 512 U	YEL 212-207-2F	11 860 *52,7*	8 100 *36*	340 *1,53*	3 400	10.8 *4,90*

Y-bearing plummer block units with a cast housing and an adapter sleeve, metric shafts
d **20 – 60** mm

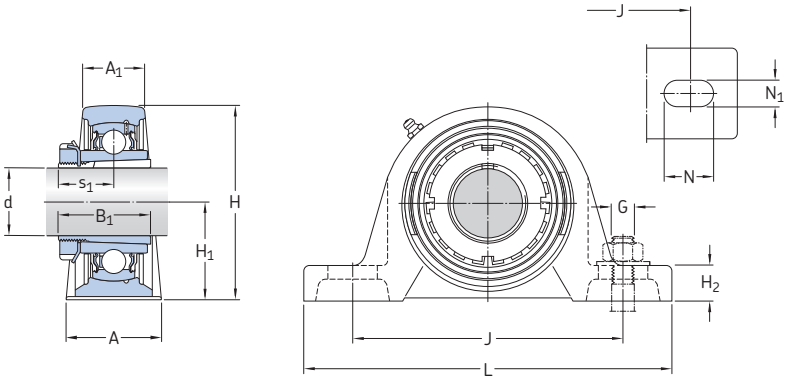

Dimensions													Basic load ratings		Fatigue load limit	Designations[1]	
													dynamic	static		Bearing unit	Adapter sleeve
d	A	A_1	B_1	H	H_1	H_2	J	L	N	N_1	G	s_1	C	C_0	P_u		
mm													kN		kN	–	
20	38	24	35	70,5	36,5	16	102	140	21,5	13	12	20	14	7,8	0,335	**SYJ 25 KF**	**H 2305**
25	42	27	38	82,5	42,9	16	118	165	24	17	14	22	19,5	11,2	0,475	**SYJ 30 KF**	**H 2306**
30	46	28	43	93	47,6	17	129	167	24	17	14	24,3	25,5	15,3	0,655	**SYJ 35 KF**	**H 2307**
35	49	31	46	99	49,2	18	136,5	184	25,5	17	14	27	30,7	19	0,8	**SYJ 40 KF**	**H 2308**
40	52	36	50	107,5	54	20	143,5	190	23,5	17	14	28,5	33,2	21,6	0,915	**SYJ 45 KF**	**H 2309**
45	58	38	55	114,5	57,2	22	157,5	206	26,5	20	16	30,5	35,1	23,2	0,98	**SYJ 50 KF**	**H 2310**
50	60	40	59	126	63,5	24	171,5	219	27,5	20	16	32,5	43,6	29	1,25	**SYJ 55 KF**	**H 2311**
55	65	47	62	138	69,8	26,5	188,5	241	29,5	20	16	34,3	52,7	36	1,53	**SYJ 60 KF**	**H 2312**
60	70	49	65	151	76,2	27	203	265	35	25	20	35,8	57,2	40	1,7	**SYJ 65 KF**	**H 2313**

[1] Bearing unit and adapter sleeve to be ordered separately

Designations Bearing unit without adapter sleeve	Separate components of the bearing unit Housing	Bearing	**Limiting speed**	**Mass** Bearing unit + sleeve
–			r/min	kg
SYJ 25 KF	SYJ 505	YSA 205-2FK	7 000	0,63
SYJ 30 KF	SYJ 506	YSA 206-2FK	6 300	0,90
SYJ 35 KF	SYJ 507	YSA 207-2FK	5 300	1,25
SYJ 40 KF	SYJ 508	YSA 208-2FK	4 800	1,80
SYJ 45 KF	SYJ 509	YSA 209-2FK	4 300	2,10
SYJ 50 KF	SYJ 510	YSA 210-2FK	4 000	2,75
SYJ 55 KF	SYJ 511	YSA 211-2FK	3 600	3,85
SYJ 60 KF	SYJ 512	YSA 212-2FK	3 400	5,00
SYJ 65 KF	SYJ 513	YSA 213-2FK	3 000	6,35

Y-bearing plummer block units with a cast housing and an adapter sleeve, inch shafts
d **3/4 – 2 1/8** in

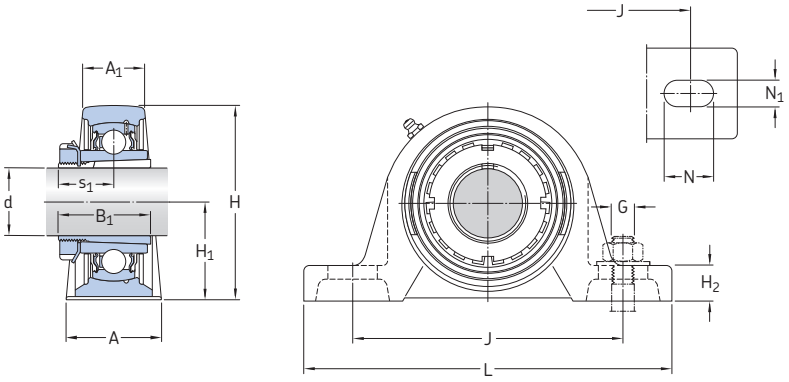

Dimensions													Designations[1]	
													Bearing unit	Adapter sleeve
d	A	A_1	B_1	H	H_1	H_2	J	L	N	N_1	G	s_1		
in/*mm*													–	
3/4 *19,05*	1.50 *38*	0.94 *24*	1.38 *35*	2.78 *70,5*	1.44 *36,5*	0.63 *16*	4.02 *102*	5.51 *140*	0.85 *21,5*	0.51 *13*	1/2 *12*	0.79 *20*	**SYJ 25 KF**	**HE 2305**
15/16 *23,813*	1.65 *42*	1.06 *27*	1.50 *38*	3.25 *82,5*	1.69 *42,9*	0.63 *16*	4.65 *118*	6.50 *165*	0.94 *24*	0.67 *17*	9/16 *14*	0.87 *22*	**SYJ 30 KF**	**HA 2306**
1 *25,4*	1.65 *42*	1.06 *27*	1.50 *38*	3.25 *82,5*	1.69 *42,9*	0.63 *16*	4.65 *118*	6.50 *165*	0.94 *24*	0.67 *17*	9/16 *14*	0.87 *22*	**SYJ 30 KF**	**HE 2306**
1 3/16 *30,163*	1.81 *46*	1.1 *28*	1.69 *43*	3.66 *93*	1.87 *47,6*	0.67 *17*	5.08 *129*	6.57 *167*	0.94 *24*	0.67 *17*	9/16 *14*	0.96 *24,3*	**SYJ 35 KF**	**HA 2307**
1 1/4 *31,75*	1.93 *49*	1.22 *31*	1.81 *46*	3.90 *99*	1.94 *49,2*	0.71 *18*	5.37 *136,5*	7.24 *184*	1.00 *25,5*	0.67 *17*	9/16 *14*	1.06 *27*	**SYJ 40 KF**	**HE 2308**
1 7/16 *36,513*	2.05 *52*	1.42 *36*	1.97 *50*	4.23 *107,5*	2.13 *54*	0.79 *20*	5.65 *143,5*	7.48 *190*	0.93 *23,5*	0.67 *17*	9/16 *14*	1.12 *28,5*	**SYJ 45 KF**	**HA 2309**
1 1/2 *38,1*	2.05 *52*	1.42 *36*	1.97 *50*	4.23 *107,5*	2.13 *54*	0.79 *20*	5.65 *143,5*	7.48 *190*	0.93 *23,5*	0.67 *17*	9/16 *14*	1.12 *28,5*	**SYJ 45 KF**	**HE 2309**
1 5/8 *41,275*	2.28 *58*	1.5 *38*	2.17 *55*	4.51 *114,5*	2.25 *57,2*	0.87 *22*	6.20 *157,5*	8.11 *206*	1.04 *26,5*	0.79 *20*	5/8 *16*	1.20 *30,5*	**SYJ 50 KF**	**HS 2310**
1 11/16 *42,863*	2.28 *58*	1.5 *38*	2.17 *55*	4.51 *114,5*	2.25 *57,2*	0.87 *22*	6.20 *157,5*	8.11 *206*	1.04 *26,5*	0.79 *20*	5/8 *16*	1.20 *30,5*	**SYJ 50 KF**	**HA 2310**
1 3/4 *44,45*	2.28 *58*	1.5 *38*	2.17 *55*	4.51 *114,5*	2.25 *57,2*	0.87 *22*	6.20 *157,5*	8.11 *206*	1.04 *26,5*	0.79 *20*	5/8 *16*	1.20 *30,5*	**SYJ 50 KF**	**HE 2310**
1 15/16 *49,213*	2.36 *60*	1.57 *40*	2.32 *59*	4.96 *126*	2.50 *63,5*	0.94 *24*	6.75 *171,5*	8.62 *219*	1.08 *27,5*	0.79 *20*	5/8 *16*	1.28 *32,5*	**SYJ 55 KF**	**HA 2311**
2 *50,8*	2.36 *60*	1.57 *40*	2.32 *59*	4.96 *126*	2.50 *63,5*	0.94 *24*	6.75 *171,5*	8.62 *219*	1.08 *27,5*	0.79 *20*	5/8 *16*	1.28 *32,5*	**SYJ 55 KF**	**HE 2311 B**
2 1/8 *53,975*	2.56 *65*	1.85 *47*	2.44 *62*	5.43 *138*	2.75 *69,8*	1.04 *26,5*	7.42 *188,5*	9.49 *241*	1.16 *29,5*	0.79 *20*	5/8 *16*	1.35 *34,3*	**SYJ 60 KF**	**HS 2312**

[1] Bearing unit and adapter sleeve to be ordered separately

Designations Bearing unit without adapter sleeve	Separate components of the bearing unit Housing	Bearing	**Basic load ratings** dynamic C	static C_0	**Fatigue load limit** P_u	**Limiting speed**	**Mass** Bearing unit + sleeve
–			lbf/*kN*		lbf/*kN*	r/min	lb/*kg*
SYJ 25 KF	SYJ 505	YSA 205-2FK	3 150 *14*	1 760 *7,8*	80 *0,335*	7 000	1.40 *0,63*
SYJ 30 KF	SYJ 506	YSA 206-2FK	4 390 *19,5*	2 520 *11,2*	110 *0,475*	6 300	2.00 *0,90*
SYJ 30 KF	SYJ 506	YSA 206-2FK	4 390 *19,5*	2 520 *11,2*	110 *0,475*	6 300	2.00 *0,90*
SYJ 35 KF	SYJ 507	YSA 207-2FK	5 740 *25,5*	3 440 *15,3*	150 *0,655*	5 300	2.75 *1,25*
SYJ 40 KF	SYJ 508	YSA 208-2FK	6 910 *30,7*	4 280 *19*	180 *0,8*	4 800	3.95 *1,80*
SYJ 45 KF	SYJ 509	YSA 209-2FK	7 470 *33,2*	4 860 *21,6*	210 *0,915*	4 300	4.70 *2,15*
SYJ 45 KF	SYJ 509	YSA 209-2FK	7 470 *33,2*	4 860 *21,6*	210 *0,915*	4 300	4.65 *2,10*
SYJ 50 KF	SYJ 510	YSA 210-2FK	7 900 *35,1*	5 220 *23,2*	220 *0,98*	4 000	6.05 *2,75*
SYJ 50 KF	SYJ 510	YSA 210-2FK	7 900 *35,1*	5 220 *23,2*	220 *0,98*	4 000	6.05 *2,75*
SYJ 50 KF	SYJ 510	YSA 210-2FK	7 900 *35,1*	5 220 *23,2*	220 *0,98*	4 000	6.05 *2,75*
SYJ 55 KF	SYJ 511	YSA 211-2FK	9 810 *43,6*	6 530 *29*	280 *1,25*	3 600	8.50 *3,85*
SYJ 55 KF	SYJ 511	YSA 211-2FK	9 810 *43,6*	6 530 *29*	280 *1,25*	3 600	8.50 *3,85*
SYJ 60 KF	SYJ 512	YSA 212-2FK	11 860 *52,7*	8 100 *36*	340 *1,53*	3 400	11.0 *5,00*

Y-bearing plummer block units with a cast housing and an adapter sleeve, inch shafts
d **2 3/16 – 2 3/8** in

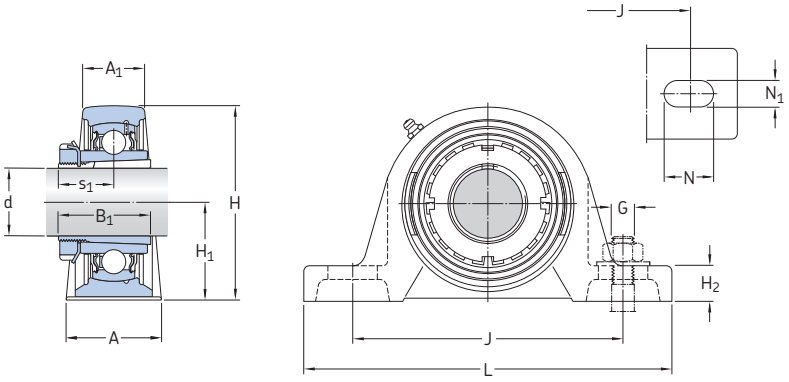

Dimensions													Designations[1]	
													Bearing unit	Adapter sleeve
d	A	A_1	B_1	H	H_1	H_2	J	L	N	N_1	G	s_1		
in/*mm*													–	
2 3/16	2.76	1.93	2.56	5.94	3.00	1.06	7.99	10.43	1.38	0.98	3/4	1.41	**SYJ 65 KF**	**HA 2313**
55,563	*70*	*49*	*65*	*151*	*76,2*	*27*	*203*	*265*	*35*	*25*	*20*	*35,8*		
2 1/4	2.76	1.93	2.56	5.94	3.00	1.06	7.99	10.43	1.38	0.98	3/4	1.41	**SYJ 65 KF**	**HE 2313**
57,15	*70*	*49*	*65*	*151*	*76,2*	*27*	*203*	*265*	*35*	*25*	*20*	*35,8*		
2 3/8	2.76	1.93	2.56	5.94	3.00	1.06	7.99	10.43	1.38	0.98	3/4	1.41	**SYJ 65 KF**	**HS 2313**
60,325	*70*	*49*	*65*	*151*	*76,2*	*27*	*203*	*265*	*35*	*25*	*20*	*35,8*		

[1] Bearing unit and adapter sleeve to be ordered separately

Designations Bearing unit without adapter sleeve	Separate components of the bearing unit Housing	Bearing	**Basic load ratings** dynamic C	static C_0	**Fatigue load limit** P_u	**Limiting speed**	**Mass** Bearing unit + sleeve
–			lbf/*kN*		lbf/*kN*	r/min	lb/*kg*
SYJ 65 KF	SYJ 513	YSA 213-2FK	12 870 *57,2*	9 000 *40*	380 *1,7*	3 000	14.5 *6,55*
SYJ 65 KF	SYJ 513	YSA 213-2FK	12 870 *57,2*	9 000 *40*	380 *1,7*	3 000	14.5 *6,55*
SYJ 65 KF	SYJ 513	YSA 213-2FK	12 870 *57,2*	9 000 *40*	380 *1,7*	3 000	14.0 *6,35*

Y-bearing plummer block units with a shortened cast housing and grub screws, metric shafts

d **20 – 50** mm

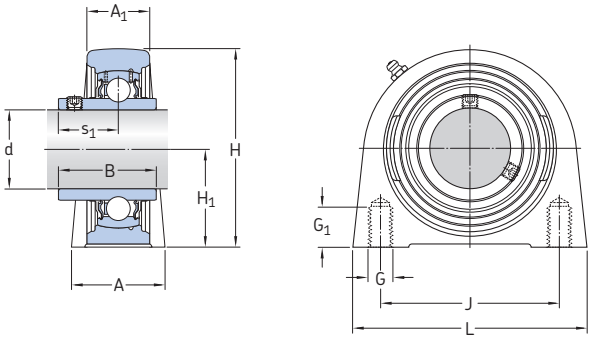

SYF

Dimensions												Basic load ratings		Fatigue load limit	Limiting speed	Designation
d	A	A_1	B	H	H_1	H_2	J	L	G	G_1	s_1	dynamic C	static C_0	P_u	with shaft tolerance h6	Bearing unit
mm												kN		kN	r/min	–
20	32	21	31	65	33,3	–	50,8	65	M 8	14	18,3	12,7	6,55	0,28	8 500	**SYF 20 TF**
	38	24	31	63	30,2	8	52	76	M 10	12	18,3	12,7	6,55	0,28	8 500	**SYFJ 20 TF**
25	36	22	34,1	70,5	36,5	–	50,8	70	M 10	15	19,8	14	7,8	0,335	7 000	**SYF 25 TF**
	38	25	34,1	73	36,5	10	56	84	M 10	15	19,8	14	7,8	0,335	7 000	**SYFJ 25 TF**
30	40	25	38,1	83	42,9	–	76,2	98	M 10	15	22,2	19,5	11,2	0,475	6 300	**SYF 30 TF**
	48	28,5	38,1	85	42,9	10	66	94	M 14	18	22,2	19,5	11,2	0,475	6 300	**SYFJ 30 TF**
35	45	27	42,9	93	47,6	–	82,6	103	M 10	15	25,4	25,5	15,3	0,655	5 300	**SYF 35 TF**
	48	30,5	42,9	96	47,6	12	80	110	M 14	20	25,4	25,5	15,3	0,655	5 300	**SYFJ 35 TF**
40	48	30	49,2	99	49,2	–	88,9	116	M 12	20	30,2	30,7	19	0,8	4 800	**SYF 40 TF**
	54	31,5	49,2	101	49,2	12	84	116	M 14	20	30,2	30,7	19	0,8	4 800	**SYFJ 40 TF**
45	48	32	49,2	107,5	54	–	95,3	120	M 12	22	30,2	33,2	21,6	0,915	4 300	**SYF 45 TF**
	54	33,5	49,2	109	54,2	12	90	120	M 14	25	30,2	33,2	21,6	0,915	4 300	**SYFJ 45 TF**
50	54	34	51,6	114,5	57,2	–	101,6	135	M 16	25,5	32,6	35,1	23,2	0,98	4 000	**SYF 50 TF**
	60	35,5	51,6	117	57,2	14	94	130	M 16	25	32,6	35,1	23,2	0,98	4 000	**SYFJ 50 TF**

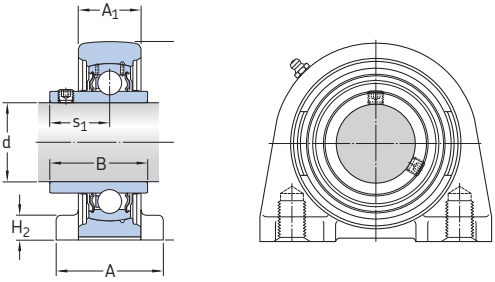

SYFJ

Designations Bearing unit	Separate components Housing	 Bearing	Mass Bearing unit
–			kg
SYF 20 TF	SYF 504	YAR 204-2F	0,43
SYFJ 20 TF	SYFJ 504	YAR 204-2F	0,54
SYF 25 TF	SYF 505	YAR 205-2F	0,52
SYFJ 25 TF	SYFJ 505	YAR 205-2F	0,67
SYF 30 TF	SYF 506	YAR 206-2F	0,90
SYFJ 30 TF	SYFJ 506	YAR 206-2F	1,00
SYF 35 TF	SYF 507	YAR 207-2F	1,20
SYFJ 35 TF	SYFJ 507	YAR 207-2F	1,40
SYF 40 TF	SYF 508	YAR 208-2F	1,50
SYFJ 40 TF	SYFJ 508	YAR 208-2F	1,60
SYF 45 TF	SYF 509	YAR 209-2F	1,80
SYFJ 45 TF	SYFJ 509	YAR 209-2F	1,85
SYF 50 TF	SYF 510	YAR 210-2F	2,20
SYFJ 50 TF	SYFJ 510	YAR 210-2F	2,30

Y-bearing plummer block units with a shortened cast housing and an eccentric locking collar, metric shafts

d **20 – 50** mm

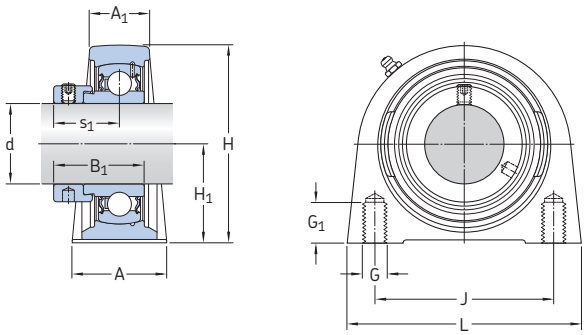

Dimensions											**Basic load ratings** dynamic	static	**Fatigue load limit**	**Limiting speed** with shaft tolerance	**Designation** Bearing unit
d	A	A_1	B_1	H	H_1	J	L	G	G_1	s_1	C	C_0	P_u		h6
mm											kN		kN	r/min	–
20	32	21	31	65	33,3	50,8	65	M 8	14	23,5	12,7	6,55	0,28	8 500	**SYF 20 FM**
25	36	22	31	70,5	36,5	50,8	70	M 10	15	23,5	14	7,8	0,335	7 000	**SYF 25 FM**
30	40	25	35,7	83	42,9	76,2	98	M 10	15	26,7	19,5	11,2	0,475	6 300	**SYF 30 FM**
35	45	27	38,9	93	47,6	82,6	103	M 10	15	29,4	25,5	15,3	0,655	5 300	**SYF 35 FM**
40	48	30	43,7	99	49,2	88,9	116	M 12	20	32,7	30,7	19	0,8	4 800	**SYF 40 FM**
45	48	32	43,7	107,5	54	95,3	120	M 12	22	32,7	33,2	21,6	0,915	4 300	**SYF 45 FM**
50	54	34	43,7	114,5	57,2	101,6	135	M 16	25,5	32,7	35,1	23,2	0,98	4 000	**SYF 50 FM**

Designations			Mass
Bearing unit	Separate components		Bearing unit
	Housing	Bearing	
–			kg
SYF 20 FM	SYF 504	YET 204	0,43
SYF 25 FM	SYF 505	YET 205	0,52
SYF 30 FM	SYF 506	YET 206	0,90
SYF 35 FM	SYF 507	YET 207	1,20
SYF 40 FM	SYF 508	YET 208	1,50
SYF 45 FM	SYF 509	YET 209	1,80
SYF 50 FM	SYF 510	YET 210	2,20

Y-bearing plummer block units with a pressed steel housing and grub screws, metric shafts

d **12 – 35** mm

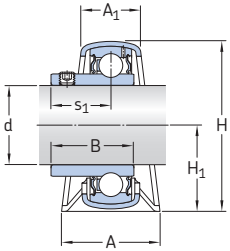

P + YAT

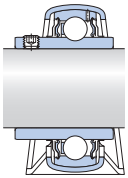

P + YAR-2F

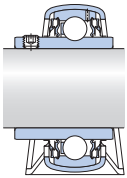

P + YAR-2RF

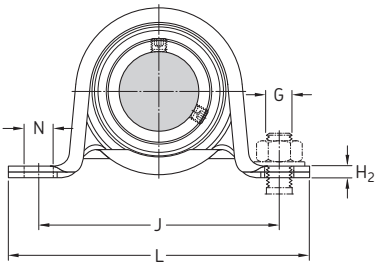

Dimensions												Basic load ratings dynamic	static	Fatigue load limit	Permissible housing load	Designation Bearing unit No order
d	A	A_1	B	H	H_1	H_2	J	L	N	G	s_1	C	C_0	P_u	radial	designation
mm												kN		kN	kN	–
12	26	18	27,4	44	22	3	68	86	9,6	8	15,9	9,56	4,75	0,2	1,25	P 12 TF
	32	21	27,4	50	25,2	3	76	99	9,6	8	15,9	9,56	4,75	0,2	1,7	P 47 R-12 TF
15	26	18	27,4	44	22	3	68	86	9,6	8	15,9	9,56	4,75	0,2	1,25	P 15 TF
	32	21	27,4	50	25,2	3	76	99	9,6	8	15,9	9,56	4,75	0,2	1,7	P 47 R-15 TF
17	26	18	22,1	44	22	3	68	86	9,6	8	15,9	9,56	4,75	0,2	1,25	P 17 RM
	26	18	27,4	44	22	3	68	86	9,6	8	15,9	9,56	4,75	0,2	1,25	P 17 TF
	32	21	22,1	50	25,2	3	76	99	9,6	8	15,9	9,56	4,75	0,2	1,7	P 47 R-17 RM
	32	21	27,4	50	25,2	3	76	99	9,6	8	15,9	9,56	4,75	0,2	1,7	P 47 R-17 TF
20	32	21	25,5	50	25,2	3	76	99	9,6	8	18,3	12,7	6,55	0,28	1,7	P 20 RM
	32	21	31	50	25,2	3	76	99	9,6	8	18,3	12,7	6,55	0,28	1,7	P 20 TF
	32	21	31	50	25,2	3	76	99	9,6	8	18,3	12,7	6,55	0,28	1,7	P 20 TR
	32	24	25,5	56	28,3	3,2	86	108	11,2	10	18,3	12,7	6,55	0,28	1,8	P 52 R-20 RM
	32	24	31	56	28,3	3,2	86	108	11,2	10	18,3	12,7	6,55	0,28	1,8	P 52 R-20 TF
25	32	24	27,2	56	28,3	3,2	86	108	11,2	10	19,5	14	7,8	0,335	1,8	P 25 RM
	32	24	34,1	56	28,3	3,2	86	108	11,2	10	19,8	14	7,8	0,335	1,8	P 25 TF
	32	24	34,1	56	28,3	3,2	86	108	11,2	10	19,8	14	7,8	0,335	1,8	P 25 TR
	38	25	27,2	66	32,9	4	95	119	11,2	10	19,5	14	7,8	0,335	2,6	P 62 R-25 RM
	38	25	34,1	66	32,9	4	95	119	11,2	10	19,8	14	7,8	0,335	2,6	P 62 R-25 TF
30	38	25	30,2	66	32,9	4	95	119	11,2	10	21	19,5	11,2	0,475	2,6	P 30 RM
	38	25	38,1	66	32,9	4	95	119	11,2	10	22,2	19,5	11,2	0,475	2,6	P 30 TF
	38	25	38,1	66	32,9	4	95	119	11,2	10	22,2	19,5	11,2	0,475	2,6	P 30 TR
	41	27	30,2	78	39,2	5	106	130	11,2	10	21	19,5	11,2	0,475	3,3	P 72 R-30 RM
	41	27	38,1	78	39,2	5	106	130	11,2	10	22,2	19,5	11,2	0,475	3,3	P 72 R-30 TF
35	41	27	33	78	39,2	5	106	130	11,2	10	23,3	25,5	15,3	0,655	3,3	P 35 RM
	41	27	42,9	78	39,2	5	106	130	11,2	10	25,4	25,5	15,3	0,655	3,3	P 35 TF
	41	27	42,9	78	39,2	5	106	130	11,2	10	25,4	25,5	15,3	0,655	3,3	P 35 TR
	43	29	33	86	43,5	5	120	148	14	12	23,3	25,5	15,3	0,655	3,8	P 80 R-35 RM
	43	29	42,9	86	43,5	5	120	148	14	12	25,4	25,5	15,3	0,655	3,8	P 80 R-35 TF

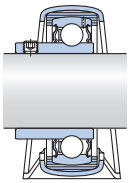

P + RIS + YAT

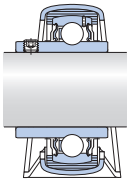

P + RIS + YAR-2F

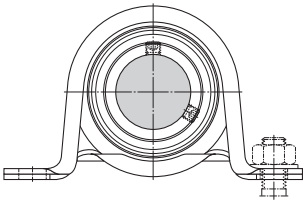

Designation Bearing unit No order designation	**Order designations** Housing	Bearing	Rubber seating ring	**Mass** Bearing unit
–	–			kg
P 12 TF	**P 40**	**YAR 203/12-2F**	**–**	0,18
P 47 R-12 TF	**P 47**	**YAR 203/12-2F**	**RIS 203**	0,22
P 15 TF	**P 40**	**YAR 203/15-2F**	**–**	0,17
P 47 R-15 TF	**P 47**	**YAR 203/15-2F**	**RIS 203**	0,21
P 17 RM	**P 40**	**YAT 203**	**–**	0,15
P 17 TF	**P 40**	**YAR 203-2F**	**–**	0,16
P 47 R-17 RM	**P 47**	**YAT 203**	**RIS 203**	0,19
P 47 R-17 TF	**P 47**	**YAR 203-2F**	**RIS 203**	0,20
P 20 RM	**P 47**	**YAT 204**	**–**	0,19
P 20 TF	**P 47**	**YAR 204-2F**	**–**	0,22
P 20 TR	**P 47**	**YAR 204-2RF**	**–**	0,22
P 52 R-20 RM	**P 52**	**YAT 204**	**RIS 204**	0,23
P 52 R-20 TF	**P 52**	**YAR 204-2F**	**RIS 204**	0,26
P 25 RM	**P 52**	**YAT 205**	**–**	0,24
P 25 TF	**P 52**	**YAR 205-2F**	**–**	0,27
P 25 TR	**P 52**	**YAR 205-2RF**	**–**	0,27
P 62 R-25 RM	**P 62**	**YAT 205**	**RIS 205**	0,35
P 62 R-25 TF	**P 62**	**YAR 205-2F**	**RIS 205**	0,38
P 30 RM	**P 62**	**YAT 206**	**–**	0,42
P 30 TF	**P 62**	**YAR 206-2F**	**–**	0,47
P 30 TR	**P 62**	**YAR 206-2RF**	**–**	0,47
P 72 R-30 RM	**P 72**	**YAT 206**	**RIS 206**	0,53
P 72 R-30 TF	**P 72**	**YAR 206-2F**	**RIS 206**	0,58
P 35 RM	**P 72**	**YAT 207**	**–**	0,57
P 35 TF	**P 72**	**YAR 207-2F**	**–**	0,67
P 35 TR	**P 72**	**YAR 207-2RF**	**–**	0,67
P 80 R-35 RM	**P 80**	**YAT 207**	**RIS 207**	0,64
P 80 R-35 TF	**P 80**	**YAR 207-2F**	**RIS 207**	0,74

Y-bearing plummer block units with a pressed steel housing and grub screws, metric shafts

d **40 – 45** mm

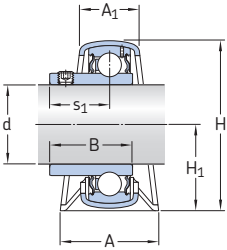

P + YAT

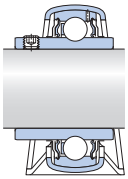

P + YAR-2F

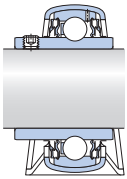

P + YAR-2RF

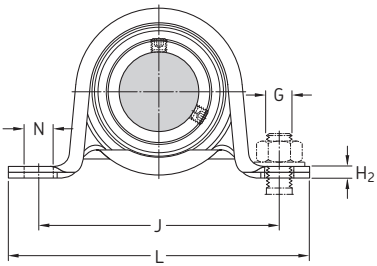

Dimensions												Basic load ratings		Fatigue load limit	Permissible housing load	Designation
												dynamic	static			Bearing unit
d	A	A_1	B	H	H_1	H_2	J	L	N	G	s_1	C	C_0	P_u	radial	No order designation
mm												kN		kN	kN	–
40	43	29	36	86	43,5	5	120	148	14	12	25,3	30,7	19	0,8	3,8	P 40 RM
	43	29	49,2	86	43,5	5	120	148	14	12	30,2	30,7	19	0,8	3,8	P 40 TF
	43	29	49,2	86	43,5	5	120	148	14	12	30,2	30,7	19	0,8	3,8	P 40 TR
	45	31	36	92	46,4	6	128	156	14	12	25,3	30,7	19	0,8	4,2	P 85 R-40 RM
	45	31	49,2	92	46,4	6	128	156	14	12	30,2	30,7	19	0,8	4,2	P 85 R-40 TF
45	45	31	37	92	46,4	6	128	156	14	12	25,8	33,2	21,6	0,915	4,2	P 45 RM
	45	31	49,2	92	46,4	6	128	156	14	12	30,2	33,2	21,6	0,915	4,2	P 45 TF
	45	31	49,2	92	46,4	6	128	156	14	12	30,2	33,2	21,6	0,915	4,2	P 45 TR

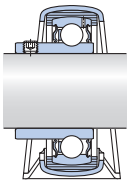

P + RIS + YAT

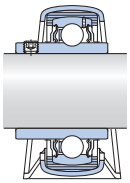

P + RIS + YAR-2F

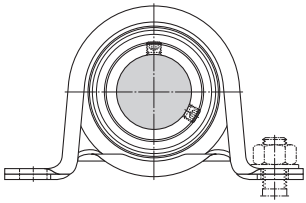

Designation Bearing unit No order designation	**Order designations** Housing	Bearing	Rubber seating ring	**Mass** Bearing unit
–	–			kg
P 40 RM	**P 80**	**YAT 208**	**–**	0,80
P 40 TF	**P 80**	**YAR 208-2F**	**–**	0,92
P 40 TR	**P 80**	**YAR 208-2RF**	**–**	0,92
P 85 R-40 RM	**P 85**	**YAT 208**	**RIS 208**	0,93
P 85 R-40 TF	**P 85**	**YAR 208-2F**	**RIS 208**	1,05
P 45 RM	**P 85**	**YAT 209**	**–**	0,88
P 45 TF	**P 85**	**YAR 209-2F**	**–**	1,00
P 45 TR	**P 85**	**YAR 209-2RF**	**–**	1,00

Y-bearing plummer block units with a pressed steel housing and grub screws, inch shafts
d **3/4 – 1 3/4** in

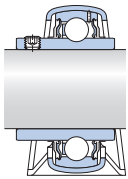

P + YAR-2F

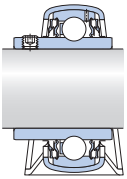

P + YAR-2RF

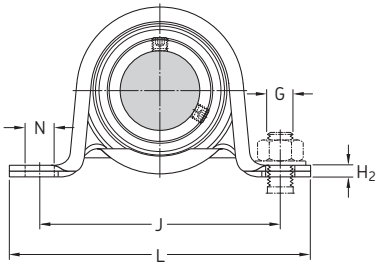

Dimensions												Designation Bearing unit No order designation
d	A	A_1	B	H	H_1	H_2	J	L	N	G	s_1	
in/*mm*												–
3/4	1.26	0.83	1.22	1.97	0.99	0.12	2.99	3.90	0.38	5/16	0.72	P 3/4 TF
19,05	*32*	*21*	*31*	*50*	*25,2*	*3*	*76*	*99*	*9,6*	*8*	*18,3*	
	1.26	0.83	1.22	1.97	0.99	0.12	2.99	3.90	0.38	5/16	0.72	P 3/4 TR
	32	*21*	*31*	*50*	*25,2*	*3*	*76*	*99*	*9,6*	*8*	*18,3*	
	1.26	0.94	1.22	2.20	1.11	0.13	3.39	4.25	0.44	3/8	0.72	P 52 R-3/4 TF
	32	*24*	*31*	*56*	*28,3*	*3,2*	*86*	*108*	*11,2*	*10*	*18,3*	
1	1.26	0.94	1.34	2.20	1.11	0.13	3.39	4.25	0.44	3/8	0.78	P 1. TF
25,4	*32*	*24*	*34,1*	*56*	*28,3*	*3,2*	*86*	*108*	*11,2*	*10*	*19,8*	
	1.26	0.94	1.34	2.20	1.11	0.13	3.39	4.25	0.44	3/8	0.78	P 1. TR
	32	*24*	*34,1*	*56*	*28,3*	*3,2*	*86*	*108*	*11,2*	*10*	*19,8*	
	1.50	0.98	1.34	2.60	1.30	0.16	3.74	4.69	0.44	3/8	0.78	P 62 R-1. TF
	38	*25*	*34,1*	*66*	*32,9*	*4*	*95*	*119*	*11,2*	*10*	*19,8*	
1 1/4	1.61	1.06	1.69	3.07	1.54	0.20	4.17	5.12	0.44	3/8	1.00	P 1.1/4 TF
31,75	*41*	*27*	*42,9*	*78*	*39,2*	*5*	*106*	*130*	*11,2*	*10*	*25,4*	
	1.61	1.06	1.69	3.07	1.54	0.20	4.17	5.12	0.44	3/8	1.00	P 1.1/4 TR
	41	*27*	*42,9*	*78*	*39,2*	*5*	*106*	*130*	*11,2*	*10*	*25,4*	
	1.69	1.14	1.69	3.39	1.71	0.20	4.72	5.83	0.55	1/2	1.00	P 80 R-1.1/4 TF
	43	*29*	*42,9*	*86*	*43,5*	*5*	*120*	*148*	*14*	*12*	*25,4*	
1 1/2	1.69	1.14	1.94	3.39	1.71	0.20	4.72	5.83	0.55	1/2	1.19	P 1.1/2 TF
38,1	*43*	*29*	*49,2*	*86*	*43,5*	*5*	*120*	*148*	*14*	*12*	*30,2*	
	1.69	1.14	1.94	3.39	1.71	0.20	4.72	5.83	0.55	1/2	1.19	P 1.1/2 TR
	43	*29*	*49,2*	*86*	*43,5*	*5*	*120*	*148*	*14*	*12*	*30,2*	
	1.77	1.22	1.94	3.62	1.83	0.24	5.04	6.14	0.55	1/2	1.19	P 85 R-1.1/2 TF
	45	*31*	*49,2*	*92*	*46,4*	*6*	*128*	*156*	*14*	*12*	*30,2*	
1 3/4	1.77	1.22	1.94	3.62	1.83	0.24	5.04	6.14	0.55	1/2	1.19	P 1.3/4 TF
44,45	*45*	*31*	*49,2*	*92*	*46,4*	*6*	*128*	*156*	*14*	*12*	*30,2*	
	1.77	1.22	1.94	3.62	1.83	0.24	5.04	6.14	0.55	1/2	1.19	P 1.3/4 TR
	45	*31*	*49,2*	*92*	*46,4*	*6*	*128*	*156*	*14*	*12*	*30,2*	

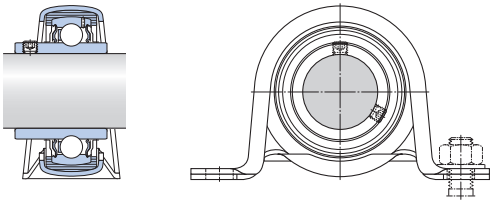

P + RIS + YAR-2F

Designation Bearing unit No order designation	**Order designations** Housing	Bearing	Rubber seating ring	**Basic load ratings** dynamic C	static C_0	**Fatigue load limit** P_u	**Permissible housing load** radial	**Mass** Bearing unit
–	–			lbf/*kN*		lbf/*kN*	lbf/*kN*	lb/*kg*
P 3/4 TF	**P 47**	**YAR 204-012-2F**	**–**	2 860 *12,7*	1 470 *6,55*	60 *0,28*	380 *1,7*	0.51 *0,23*
P 3/4 TR	**P 47**	**YAR 204-012-2RF**	**–**	2 860 *12,7*	1 470 *6,55*	60 *0,28*	380 *1,7*	0.51 *0,23*
P 52 R-3/4 TF	**P 52**	**YAR 204-012-2F**	**RIS 204**	2 860 *12,7*	1 470 *6,55*	60 *0,28*	410 *1,8*	0.60 *0,27*
P 1. TF	**P 52**	**YAR 205-100-2F**	**–**	3 150 *14*	1 760 *7,8*	80 *0,335*	410 *1,8*	0.60 *0,27*
P 1. TR	**P 52**	**YAR 205-100-2RF**	**–**	3 150 *14*	1 760 *7,8*	80 *0,335*	410 *1,8*	0.60 *0,27*
P 62 R-1. TF	**P 62**	**YAR 205-100-2F**	**RIS 205**	3 150 *14*	1 760 *7,8*	80 *0,335*	590 *2,6*	0.84 *0,38*
P 1.1/4 TF	**P 72**	**YAR 207-104-2F**	**–**	5 740 *25,5*	3 440 *15,3*	150 *0,655*	740 *3,3*	1.61 *0,73*
P 1.1/4 TR	**P 72**	**YAR 207-104-2RF**	**–**	5 740 *25,5*	3 440 *15,3*	150 *0,655*	740 *3,3*	1.61 *0,73*
P 80 R-1.1/4 TF	**P 80**	**YAR 207-104-2F**	**RIS 207**	5 740 *25,5*	3 440 *15,3*	150 *0,655*	860 *3,8*	1.92 *0,87*
P 1.1/2 TF	**P 80**	**YAR 208-108-2F**	**–**	6 910 *30,7*	4 280 *19*	180 *0,8*	860 *3,8*	2.14 *0,97*
P 1.1/2 TR	**P 80**	**YAR 208-108-2RF**	**–**	6 910 *30,7*	4 280 *19*	180 *0,8*	860 *3,8*	2.14 *0,97*
P 85 R-1.1/2 TF	**P 85**	**YAR 208-108-2F**	**RIS 208**	6 910 *30,7*	4 280 *19*	180 *0,8*	950 *4,2*	2.45 *1,10*
P 1.3/4 TF	**P 85**	**YAR 209-112-2F**	**–**	7 470 *33,2*	4 860 *21,6*	210 *0,915*	950 *4,2*	2.25 *1,00*
P 1.3/4 TR	**P 85**	**YAR 209-112-2RF**	**–**	7 470 *33,2*	4 860 *21,6*	210 *0,915*	950 *4,2*	2.25 *1,00*

Y-bearing plummer block units with a pressed steel housing and an eccentric locking collar, metric shafts

d **15 – 45** mm

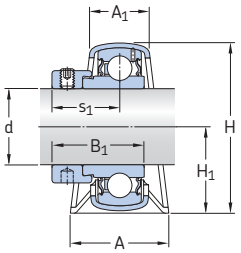

P + YET

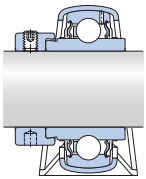

P + YEL-2F

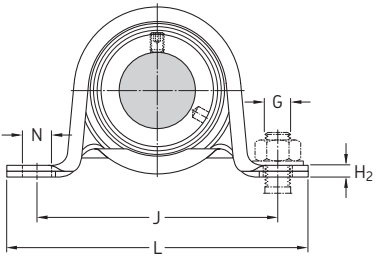

Dimensions												Basic load ratings		Fatigue load limit	Permissible housing load	Designation
												dynamic	static			Bearing unit
d	A	A_1	B_1	H	H_1	H_2	J	L	N	G	s_1	C	C_0	P_u	radial	No order designation
mm												kN		kN	kN	–
15	26	18	28,6	44	22	3	68	86	9,6	8	22,1	9,56	4,75	0,2	1,25	P 15 FM
	32	21	28,6	50	25,2	3	76	99	9,6	8	22,1	9,56	4,75	0,2	1,7	P 47 R-15 FM
17	26	18	28,6	44	22	3	68	86	9,6	8	22,1	9,56	4,75	0,2	1,25	P 17 FM
	32	21	28,6	50	25,2	3	76	99	9,6	8	22,1	9,56	4,75	0,2	1,7	P 47 R-17 FM
20	32	21	31	50	25,2	3	76	99	9,6	8	23,5	12,7	6,55	0,28	1,7	P 20 FM
	32	21	43,7	50	25,2	3	76	99	9,6	8	26,6	12,7	6,55	0,28	1,7	P 20 WF
	32	24	31	56	28,3	3,2	86	108	11,2	10	23,5	12,7	6,55	0,28	1,8	P 52 R-20 FM
	32	24	43,7	56	28,3	3,2	86	108	11,2	10	26,6	12,7	6,55	0,28	1,8	P 52 R-20 WF
25	32	24	31	56	28,3	3,2	86	108	11,2	10	23,5	14	7,8	0,335	1,8	P 25 FM
	32	24	44,4	56	28,3	3,2	86	108	11,2	10	26,9	14	7,8	0,335	1,8	P 25 WF
	38	25	31	66	32,9	4	95	119	11,2	10	23,5	14	7,8	0,335	2,6	P 62 R-25 FM
	38	25	44,4	66	32,9	4	95	119	11,2	10	26,9	14	7,8	0,335	2,6	P 62 R-25 WF
30	38	25	35,7	66	32,9	4	95	119	11,2	10	26,7	19,5	11,2	0,475	2,6	P 30 FM
	38	25	48,4	66	32,9	4	95	119	11,2	10	30,1	19,5	11,2	0,475	2,6	P 30 WF
	41	27	35,7	78	39,2	5	106	130	11,2	10	26,7	19,5	11,2	0,475	3,3	P 72 R-30 FM
	41	27	48,4	78	39,2	5	106	130	11,2	10	30,1	19,5	11,2	0,475	3,3	P 72 R-30 WF
35	41	27	38,9	78	39,2	5	106	130	11,2	10	29,4	25,5	15,3	0,655	3,3	P 35 FM
	41	27	51,1	78	39,2	5	106	130	11,2	10	32,3	25,5	15,3	0,655	3,3	P 35 WF
	43	29	38,9	86	43,5	5	120	148	14	12	29,4	25,5	15,3	0,655	3,8	P 80 R-35 FM
	43	29	51,1	86	43,5	5	120	148	14	12	32,3	25,5	15,3	0,655	3,8	P 80 R-35 WF
40	43	29	43,7	86	43,5	5	120	148	14	12	32,7	30,7	19	0,8	3,8	P 40 FM
	43	29	56,3	86	43,5	5	120	148	14	12	34,9	30,7	19	0,8	3,8	P 40 WF
	45	31	43,7	92	46,4	6	128	156	14	12	32,7	30,7	19	0,8	4,2	P 85 R-40 FM
	45	31	56,3	92	46,4	6	128	156	14	12	34,9	30,7	19	0,8	4,2	P 85 R-40 WF
45	45	31	43,7	92	46,4	6	128	156	14	12	32,7	33,2	21,6	0,915	4,2	P 45 FM
	45	31	56,3	92	46,4	6	128	156	14	12	34,9	33,2	21,6	0,915	4,2	P 45 WF

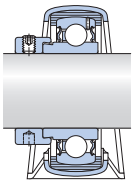

P + RIS + YET

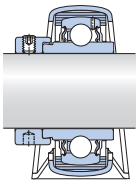

P + RIS + YEL-2F

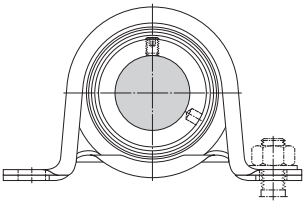

Designation Bearing unit No order designation	**Order designations** Housing	Bearing	Rubber seating ring	**Mass** Bearing unit
–	–			kg
P 15 FM	**P 40**	**YET 203/15**	**–**	0,18
P 47 R-15 FM	**P 47**	**YET 203/15**	**RIS 203**	0,23
P 17 FM	**P 40**	**YET 203**	**–**	0,18
P 47 R-17 FM	**P 47**	**YET 203**	**RIS 203**	0,22
P 20 FM	**P 47**	**YET 204**	**–**	0,24
P 20 WF	**P 47**	**YEL 204-2F**	**–**	0,27
P 52 R-20 FM	**P 52**	**YET 204**	**RIS 204**	0,28
P 52 R-20 WF	**P 52**	**YEL 204-2F**	**RIS 204**	0,31
P 25 FM	**P 52**	**YET 205**	**–**	0,28
P 25 WF	**P 52**	**YEL 205-2F**	**–**	0,33
P 62 R-25 FM	**P 62**	**YET 205**	**RIS 205**	0,39
P 62 R-25 WF	**P 62**	**YEL 205-2F**	**RIS 205**	0,44
P 30 FM	**P 62**	**YET 206**	**–**	0,45
P 30 WF	**P 62**	**YEL 206-2F**	**–**	0,41
P 72 R-30 FM	**P 72**	**YET 206**	**RIS 206 A**	0,60
P 72 R-30 WF	**P 72**	**YEL 206-2F**	**RIS 206 A**	0,66
P 35 FM	**P 72**	**YET 207**	**–**	0,75
P 35 WF	**P 72**	**YEL 207-2F**	**–**	0,83
P 80 R-35 FM	**P 80**	**YET 207**	**RIS 207 A**	0,82
P 80 R-35 WF	**P 80**	**YEL 207-2F**	**RIS 207 A**	0,90
P 40 FM	**P 80**	**YET 208**	**–**	0,99
P 40 WF	**P 80**	**YEL 208-2F**	**–**	1,05
P 85 R-40 FM	**P 85**	**YET 208**	**RIS 208 A**	1,10
P 85 R 40 WF	**P 85**	**YEL 208-2F**	**RIS 208 A**	1,20
P 45 FM	**P 85**	**YET 209**	**–**	1,05
P 45 WF	**P 85**	**YEL 209-2F**	**–**	1,15

Y-bearing plummer block units with a pressed steel housing and an eccentric locking collar, inch shafts

d **3/4 – 1 1/2** in

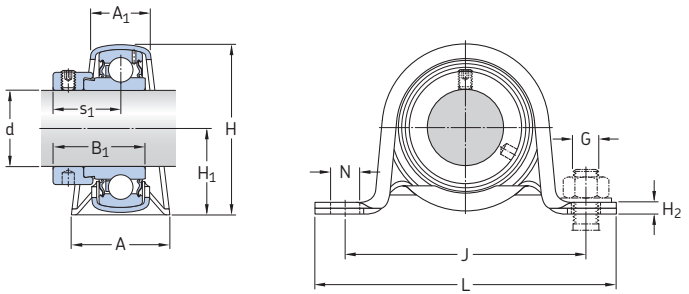

P + YET

Dimensions												Designation Bearing unit No order designation
d	A	A_1	B_1	H	H_1	H_2	J	L	N	G	s_1	
in/*mm*												–
3/4	1.26	0.83	1.22	1.97	0.99	0.12	2.99	3.90	0.38	5/16	0.93	P 3/4 FM
19,05	*32*	*21*	*31*	*50*	*25,2*	*3*	*76*	*99*	*9,6*	*8*	*23,5*	
	1.26	0.94	1.22	2.20	1.11	0.13	3.39	4.25	0.44	3/8	0.93	P 52 R-3/4 FM
	32	*24*	*31*	*56*	*28,3*	*3,2*	*86*	*108*	*11,2*	*10*	*23,5*	
1	1.26	0.94	1.22	2.20	1.11	0.13	3.39	4.25	0.44	3/8	0.93	P 1. FM
25,4	*32*	*24*	*31*	*56*	*28,3*	*3,2*	*86*	*108*	*11,2*	*10*	*23,5*	
	1.50	0.98	1.22	2.60	1.30	0.16	3.74	4.69	0.44	3/8	0.93	P 62 R-1. FM
	38	*25*	*31*	*66*	*32,9*	*4*	*95*	*119*	*11,2*	*10*	*23,5*	
1 1/2	1.69	1.14	1.72	3.39	1.71	0.20	4.72	5.83	0.55	1/2	1.29	P 1.1/2 FM
38,1	*43*	*29*	*43,7*	*86*	*43,5*	*5*	*120*	*148*	*14*	*12*	*32,7*	
	1.77	1.22	1.72	3.62	1.83	0.24	5.04	6.14	0.55	1/2	1.29	P 85 R-1.1/2 FM
	45	*31*	*43,7*	*92*	*46,4*	*6*	*128*	*156*	*14*	*12*	*32,7*	

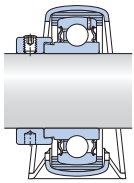

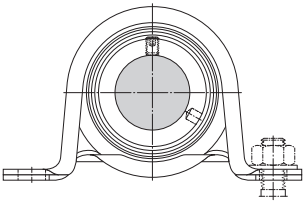

P + RIS + YET

Designation Bearing unit No order designation	**Order designations** Housing	 Bearing	 Rubber seating ring	**Basic load ratings** dynamic C	 static C_0	**Fatigue load limit** P_u	**Permissible housing load** radial	**Mass** Bearing unit
–	–			lbf/*kN*		lbf/*kN*	lbf/*kN*	lb/*kg*
P 3/4 FM	**P 47**	**YET 204-012**	**–**	2 860 *12,7*	1 470 *6,55*	60 *0,28*	380 *1,7*	0.57 *0,26*
P 52 R-3/4 FM	**P 52**	**YET 204-012**	**RIS 204**	2 860 *12,7*	1 470 *6,55*	60 *0,28*	410 *1,8*	0.66 *0,30*
P 1. FM	**P 52**	**YET 205-100**	**–**	3 150 *14*	1 760 *7,8*	80 *0,335*	410 *1,8*	0.62 *0,28*
P 62 R-1. FM	**P 62**	**YET 205-100**	**RIS 205**	3 150 *14*	1 760 *7,8*	80 *0,335*	590 *2,6*	0.86 *0,39*
P 1.1/2 FM	**P 80**	**YET 208-108**	**–**	6 910 *30,7*	4 280 *19*	180 *0,8*	860 *3,8*	2.25 *1,00*
P 85 R-1.1/2 FM	**P 85**	**YET 208-108**	**RIS 208 A**	6 910 *30,7*	4 280 *19*	180 *0,8*	950 *4,2*	2.55 *1,15*


SKF

Flanged Y-bearing units

Designs **164**

Flanged Y-TECH units **165**

Flanged Y-bearing units with a cast housing **166**

Flanged Y-bearing units with a pressed steel housing **167**

Data – general **170**
Dimensions 170
To erances 170
Radial internal clearance 170
Materials 170
Load carrying ability of the housings 170
Attaching to a support surface 171
End covers 173
Grease fills 173
Mounting 173

Product tables **174**
4.1 Flanged Y-TECH units with a housing with a square flange and grub screws, metric shafts 174
4.2 Flanged Y-TECH units with a housing with an oval flange and grub screws, metric shafts 176
4.3 Flanged Y-bearing units with a cast housing with a square flange and grub screws, metric shafts 178
inch shafts 182
4.4 Flanged Y-bearing units with a cast housing with a square flange and an eccentric locking collar, metric shafts 188
inch shafts 190
4.5 Flanged Y-bearing units with a cast housing with a square flange and an adapter sleeve, metric shafts 194
inch shafts 196
4.6 Flanged Y-bearing units with a cast housing with an oval flange and grub screws, metric shafts 200
inch shafts 202
4.7 Flanged Y-bearing units with a cast housing with an oval flange and an eccentric locking collar, metric shafts 208
inch shafts 210
4.8 Flanged Y-bearing units with a cast housing with an oval flange and an adapter sleeve, metric shafts 214
inch shafts 216
4.9 Flanged Y-bearing units with a cast housing with a round flange and grub screws, metric shafts 218
4.10 Flanged Y-bearing units with a pressed steel housing and grub screws, metric shafts 220
inch shafts 224
4.11 Flanged Y-bearing units with a pressed steel housing and an eccentric locking collar, metric shafts 228
inch shafts 232

Designs

SKF flanged Y-bearing units are available as standard in a wide variety of designs. The standard assortment includes flanged Y-bearing units with housings made of:

- composite material (→ **fig. 1**)
- grey cast iron (→ **fig. 2**)
- pressed sheet steel (→ **fig. 3**)

They are located on the shaft via the inner ring of the insert bearing with either:

- grub (set) screws
- an eccentric locking collar
- an adapter sleeve

The Y-bearing can be sealed with either:

- the standard integral seal
- the standard integral seal and an additional flinger
- the highly efficient multiple seal

For additional information about Y-bearings, refer to the section *Y-bearings*, starting on **page 79**.

Flanged Y-bearing units available from stock are listed in the product tables. Other units can be assembled by ordering the parts separately. The tables on **pages 168** to **169** show the wide variety of combinations of Y-bearings and flanged housings.

Fig. 1



Fig. 2



Fig. 3



Flanged Y-TECH units

Flanged Y-TECH units have housings made of composite material. They were developed for bearing arrangements that must operate reliably in difficult environments for extended periods without maintenance. There are two standard series available:

- FYK series (→ **fig. 4**) with a square flange and four bolt holes
- FYTBK series (→ **fig. 5**) with an oval flange and two bolt holes

For additional information about Y-TECH flanged units for the food industry, refer to **page 252**.

Flanged Y-TECH units in the FYK series are fitted with Y-bearings in the:

- YAR 2-2F series, unit designation suffix TF
- YAR 2-2RF series, unit designation suffix TR

These units, which are attached to the shaft with grub screws, are in the standard SKF assortment.

Fig. 4



Fig. 5



Fig. 6



Fig. 7



Fig. 8



Flanged Y-bearing units with a cast housing

Flanged Y-bearing units with a cast housing can be relubricated through a grease fitting in the housing. This makes them especially suitable for bearing arrangements that operate under any of the following conditions:

- high levels of contamination
- high speeds
- high temperatures
- relatively heavy loads

Three different housing designs are available:

- FY and FYJ series with a square flange and four holes for attachment bolts (→ **fig. 6**)
- FYC series with a round flange and four holes for attachment bolts (→ **fig. 7**)
- FYT, FYTB and FYTJ series with an oval flange and two holes for attachment bolts (→ **fig. 8**).

Flanged Y-bearing units with a pressed steel housing

Flanged Y-bearing units with a pressed steel housing are designed for simple applications with limited loads and speeds. The two-part housing, which has no provision for relubrication, is ordered separately from the insert bearing, making a large number of combinations possible.

The flanged housings made of pressed steel are available in three different series:

- PF series with a round flange and three or four square holes for attachment bolts (→ **fig. 9**)
- PFD series with a triangular flange and three square holes for attachment bolts (→ **fig. 10**)
- PFT series with an oval flange and two square holes for attachment bolts (→ **fig. 11**).

Fig. 9



Fig. 10



Fig. 11



Flanged Y-bearing units

Flanged Y-bearing unit	Housings of composite material		Cast housings			
						
Y-bearings	**FYK 5(00)**	**FYTBK 5(00)**	**FY 5(00)**	**FYJ 5(00)**	**FYM 5(00)**	**FYT 5(00)**
YAR 2-2F 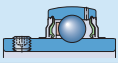	**FYK .. TF** 20–40 mm 3/4–1 1/2 in.[1]	**FYTBK .. TF** 20–35 mm 3/4–1 1/4 in.[1]	**FY .. TF** 12–65 mm 1/2–2 15/16 in.	**FYJ .. TF** 20–100 mm 3/4–2 1/2 in.[1]	**FYM .. TF** 1 7/16–3 in.	**FYT .. TF** 1/2–2 3/16 in.
YAR 2-2RF 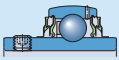	**FYK .. TR** 20–40 mm 3/4–1 1/2 in.[1]	**FYTBK .. TR** 20–35 mm 3/4–1 1/4 in.[1]	**FY .. TR** 20–60 mm 3/4–2 1/2 in.[1]	20–60 mm[1] 3/4–2 1/2 in.[1]	–	–
YAR 2-2RF/HV 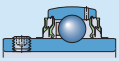	20–40 mm[1] 3/4–1 1/2 in.[1]	20–35 mm[1] 3/4–1 7/16 in.[1]	20–50 mm 3/4–1 15/16 in.	20–50 mm 3/4–1 15/16 in.	–	–
YAR 2-2RF/ VE495 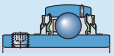	20–40 mm[1]	20–35 mm[1]	20–50 mm	20–50 mm	–	–
YAT 2 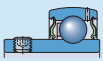	20–40 mm[1]	20–35 mm[1]	17–50 mm[1]	20–50 mm[1]	–	**FYT .. RM** 1/2–2 3/16 in.
YEL 2-2F 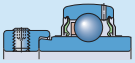	20–40 mm[1]	20–35 mm[1]	**FY .. WF** 20–60 mm 1 –2 7/16 in.	20–50 mm[1]	–	–
YEL 2-2RF/ VL065 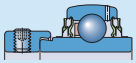	20–40 mm[1]	20–35 mm[1]	20–40 mm[1]	20–40 mm[1]	–	–
YET 2 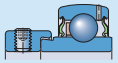	20–40 mm[1] 3/4–1 1/2 in.[1]	20–35 mm[1] 3/4–1 7/16 in.[1]	**FY .. FM** 15–60 mm 3/4–2 3/16 in.	20–60 mm[1] 3/4–1 1/2 in.[1]	–	**FYT .. FM** 1/2–2 3/16 in.
YSA 2-2FK on adapter sleeve 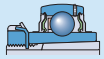	20–35 mm[1] 3/4–1 1/4 in.[1]	20–30 mm[1] 3/4–1 3/16 in.[1]	20–60 mm[1] 3/4–2 3/8 in.[1]	**FYJ .. KF** 20–60 mm 3/4–2 3/8 in.	–	–
17262(00) 	20–40 mm[1]	20–35 mm[1]	17–60 mm[1]	20–60 mm[1]	–	–

[1] Parts must be ordered separately.

Flanged Y-bearing unit 	Cast housings			Pressed steel housings		
						
Y-bearings	**FYTB 5(00)**	**FYTJ 5(00)**	**FYC 5(00)**	**PF**	**PFD**	**PFT**
YAR 2-2F 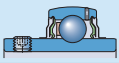	**FYTB .. TF** 12–50 mm 3/4–1 3/4 in.	**FYTJ .. TF** 20–50 mm 3/4–1 3/4 in.	**FYC .. TF** 20–65 mm 3/4–2 1/2 in.[1]	12–50 mm[1] 3/4–1 3/4 in.[1]	12–40 mm[1] 3/4–1 1/2 in.[1]	12–40 mm[1] 3/4–1 1/2 in.[1]
YAR 2-2RF 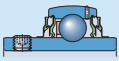	**FYTB .. TR** 20–50 mm 3/4–1 3/4 in.[1]	20–50 mm[1] 3/4–1 3/4 in.[1]	20–65 mm[1] 3/4–2 1/2 in.[1]	20–35 mm[1] 3/4–1 3/4 in.[1]	20–40 mm[1] 3/4–1 1/2 in.[1]	20–40 mm[1] 3/4–1 1/2 in.[1]
YAR 2-2RF/HV 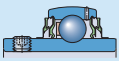	20–50 mm 3/4–1 15/16 in.	20–50 mm 3/4–1 15/16 in.	20–50 mm 3/4–1 15/16 in.	20–50 mm 3/4–1 15/16 in.	20–40 mm[1] 3/4–1 1/2 in.[1]	20–40 mm[1] 3/4–1 1/2 in.[1]
YAR 2-2RF/ VE495 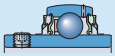	20–50 mm	20–50 mm	20–50 mm	20–50 mm	20–40 mm[1]	20–40 mm[1]
YAT 2 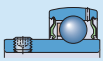	17–50 mm[1]	20–50 mm[1]	20–50 mm[1]	17–50 mm[1] 5/8–1 15/16 in.[1]	17–40 mm[1] 5/8–1 1/2 in.[1]	17–40 mm[1] 5/8–1 1/2 in.[1]
YEL 2-2F 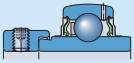	**FYTB .. WF** 20–50 mm	20–50 mm[1]	20–60 mm[1]	20–50 mm[1] 1/2–1 15/16 in.[1]	20–40 mm[1] 1/2–1 1/2 in.[1]	20–40 mm[1] 1/2–1 1/2 in.[1]
YEL 2-2RF/ VL065 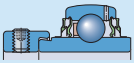	20–40 mm[1]	20–40 mm[1]	20–40 mm[1]	20–40 mm[1]	20–40 mm[1]	20–40 mm[1]
YET 2 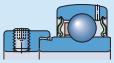	**FYTB .. FM** 15–50 mm 3/4–1 1/2 in.[1]	20–50 mm[1] 3/4–1 1/2 in.[1]	20–40 mm[1] 3/4–1 1/2 in.[1]	15–50 mm[1] 3/4–1 3/4 in.[1]	15–40 mm[1] 3/4–1 1/2 in.[1]	15–40 mm[1] 3/4–1 1/2 in.[1]
YSA 2-2FK on adapter sleeve 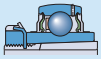	20–45 mm[1] 3/4–1 3/4 in.[1]	**FYTJ .. KF** 20–45 mm 3/4–1 3/4 in.	20–60 mm[1] 3/4–2 3/8 in.[1]	20–45 mm[1] 3/4–1 3/4 in.[1]	20–35 mm[1] 3/4–1 3/4 in.[1]	20–35 mm[1] 3/4–1 3/4 in.[1]
17262(00) 	17–50 mm[1]	20–50 mm[1]	20–60 mm[1]	17–50 mm[1]	17–40 mm[1]	17–40 mm[1]

[1] Parts must be ordered separately.

Data – general

Dimensions

The boundary dimensions for most flanged Y-bearing housings are in accordance with the following standards:

- Housings in the FY, FYT and FYTB series are in accordance with ISO 3228:1993.
- Housings in the FYJ, FYTJ and FYC series are in accordance with JIS B 1559-1995.
- Housings in the PF, PFD and PFT series are in accordance with ISO 3228:1993.

Tolerances

For flanged Y-bearing units with a cast housing, the tolerance for the total width T of the unit (→ **fig. 12**) is:

- ±0,5 mm for units up to and including 50 mm bore diameter
- ±0,6 mm for larger units

For flanged Y-bearing units with housings made of composite material or grey cast iron, the outside diameter of the bearing is matched to the diameter of the housing bore so that the outer ring is prevented from turning in its seat, but still able to compensate for misalignment.

Additional information about tolerances for the inner ring bore are listed in the section *Y-bearings* on **page 89**.

Radial internal clearance

The Y-bearing used in a flanged Y-bearing unit has the same radial internal clearance as a similarly sized individual Y-bearing.

Additional information about the radial internal clearance can be found in the section *Y-bearings* on **page 90**.

Fig. 12

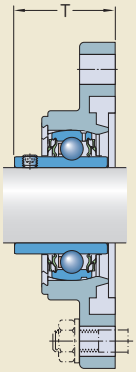

Materials

Composite housings
These housings are made of injection moulded glass fibre reinforced polyamide 6. A steel coil embedded in the housing adds greater stability to the form of the housing, even if temperatures are elevated.

The bolt holes for housings in the FYK and FYTBK series are reinforced with zinc-plated sheet steel inserts. The standard housing colour is black.

Cast housings
Cast housings are manufactured from grey cast iron EN-GJL HB195 in accordance with EN 1561:1997.

Pressed steel housings
Pressed steel housings are made from cold-rolled steel and are zinc-coated for corrosion protection.

Load carrying ability of the housings

Housings made of either composite material or grey cast iron are able to withstand the same dynamic and static loads as the Y-bearings they incorporate. These Y-bearing units can also be used for applications where shock loads or variable axial loads occur.

If SKF Y-bearing units are to be used in an application where health, safety, or the environment is at risk, contact the SKF application engineering service during the design phase.

Pressed steel housings have a lower load carrying capacity than their insert bearings. Permissible radial loads are specified in the product tables. The axial load should not exceed 20% of the permissible radial load.

If the Y-bearing units will be subjected to shock loads or variable axial loads, a grey cast iron or Y-TECH housing should always be used.

Flanged composite housings and most grey cast iron housings have a recess (→ **fig. 13a**), or shoulder (→ **fig. 13b**) at the back for accurate positioning, either on an appropriate shoulder or in a bore in the machine wall.

An appropriate shoulder can be provided by one of the following methods:

- machining the wall accordingly (→ **fig. 13c**)
- attaching an appropriate washer to the wall by several screws (→ **fig. 13d**)

Furthermore, these features relieve the attachment bolts of radial forces.

Attaching to a support surface

Flanged Y-bearing units have two, three or four bolt holes through which they can be attached to their support surface with threaded fasteners. These bolt holes are:

- round and reinforced with pressed steel inserts in composite housings
- drilled and round in cast housings
- square in pressed steel housings

In the absence of a centring shoulder and when heavy loads apply, SKF recommends doweling the housing to its support surface. Dimples for the dowel pin holes are cast into housings in the FY, FYJ, FYTB and FYTJ series. Information on the position and size of the holes for these dowel pins is provided in **table 1**, **page 172**.

Fig. 13

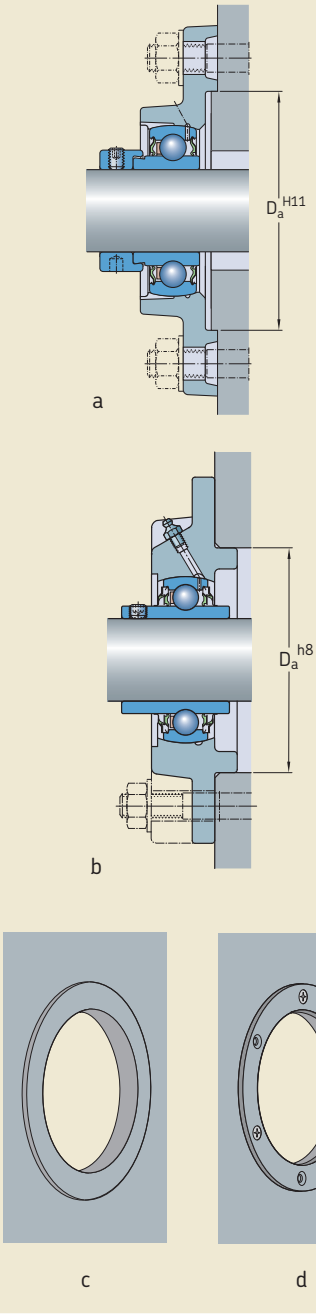

Table 1

Position and size of dowel pin holes for flanged Y-bearing housings made of grey cast iron

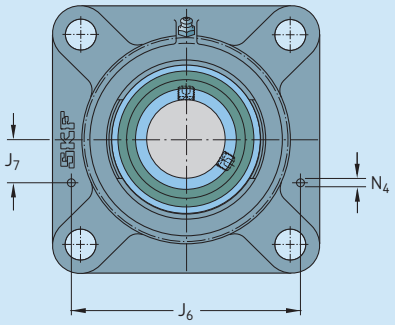

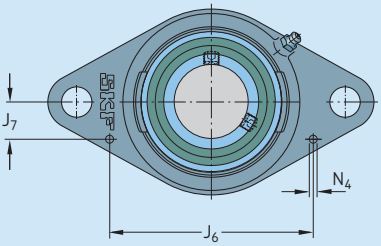

Housing size	Dimensions for housings in the FY, FYJ series			FYT, FYTB, FYTJ series		
	J_6	J_7	N_4	J_6	J_7	N_4
–	mm					
503	66	12	4	61,5	11	2
504	74	16	4	74	11,5	2
505	83	19	4	81	12	4
506	96	24,5	4	99	12,5	4
507	106	29	4	106	15	5
508	118	34	4	116	16	6
509	123	33,5	5	120	18	6
510	129	35,5	5	127	20	6
511	148	45	5	154	18	6
512	161	49,5	5	–	–	–
513	169	51	6	–	–	–
514	169	49	8	–	–	–
515	176	51,5	8	–	–	–
516	184	51,5	8	–	–	–
518	207	52,5	8	–	–	–
520	233	55	8	–	–	–

End covers

To protect the shaft ends and avoid any accidents, end covers are available for flanged Y-TECH units and most flanged Y-bearing units with a cast housing (→ **fig. 14**).

In the product tables, end covers in the ECY 2 series are shown together with the appropriate bearing unit. The designation of the end cover is listed together with the distance that the end cover protrudes from the housing.

For additional information about end covers, refer to the section *Design of Y-bearing arrangements*, on **page 47**.

Fig. 14

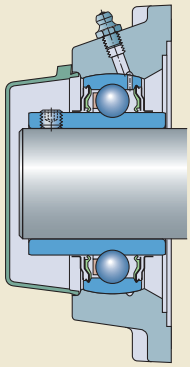

Grease fills

All standard SKF flanged Y-bearing units are filled with a high-quality long-lasting grease containing a lithium-calcium thickener that has a consistency of 2 on the NLGI scale.

For additional information about lubricants and lubrication, refer to the section *Lubrication and maintenance*, starting on **page 48**.

Mounting

The procedure for mounting a flanged Y-bearing unit depends on:

- the design of the housing
- the method used to attach the unit to the shaft

These methods are described in detail in the section *Mounting instructions*, starting on **page 52**.

Flanged Y-TECH units with a housing with a square flange and grub screws, metric shafts
d **20 – 40** mm

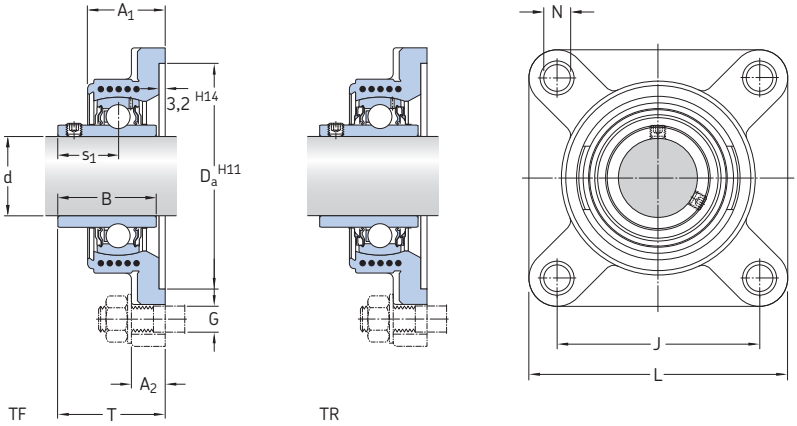

Dimensions											Basic load ratings		Fatigue load limit	Limiting speed	Designation
											dynamic	static		with shaft tolerance h6	Bearing unit
d	A_1	A_2	B	D_a	J	L	N	G	s_1	T	C	C_0	P_u		
mm											kN		kN	r/min	–
20	30	15	31	68,3	63,5	86	12	10	18,3	37,3	12,7	6,55	0,28	8 500	**FYK 20 TF**
	30	15	31	68,3	63,5	86	12	10	18,3	37,3	12,7	6,55	0,28	5 000	**FYK 20 TR**
25	31	15	34,1	74,6	70	95	12	10	19,8	38,8	14	7,8	0,335	7 000	**FYK 25 TF**
	31	15	34,1	74,6	70	95	12	10	19,8	38,8	14	7,8	0,335	4 300	**FYK 25 TR**
30	33	15,3	38,1	93,7	82,5	108	12	10	22,2	42,2	19,5	11,2	0,475	6 300	**FYK 30 TF**
	33	15,3	38,1	93,7	82,5	108	12	10	22,2	42,2	19,5	11,2	0,475	3 800	**FYK 30 TR**
35	35	17	42,9	106,4	92	118	14,5	12	25,4	46,4	25,5	15,3	0,655	5 300	**FYK 35 TF**
	35	17	42,9	106,4	92	118	14,5	12	25,4	46,4	25,5	15,3	0,655	3 200	**FYK 35 TR**
40	39	17	49,2	115,9	101,5	130	14,5	12	30,2	54,2	30,7	19	0,8	4 800	**FYK 40 TF**
	39	17	49,2	115,9	101,5	130	14,5	12	30,2	54,2	30,7	19	0,8	2 800	**FYK 40 TR**

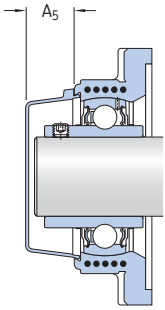

Designations			**Mass**	**Appropriate end cover**	
Bearing unit	Separate components		Bearing unit	Designation	Dimension
	Housing	Bearing			A_5
–			kg	–	mm
FYK 20 TF	FYK 504	YAR 204-2F	0,26	ECY 204	18,5
FYK 20 TR	FYK 504	YAR 204-2RF	0,26	ECY 204	18,5
FYK 25 TF	FYK 505	YAR 205-2F	0,33	ECY 205	18
FYK 25 TR	FYK 505	YAR 205-2RF	0,33	ECY 205	18
FYK 30 TF	FYK 506	YAR 206-2F	0,48	ECY 206	20
FYK 30 TR	FYK 506	YAR 206-2RF	0,48	ECY 206	20
FYK 35 TF	FYK 507	YAR 207-2F	0,66	ECY 207	22
FYK 35 TR	FYK 507	YAR 207-2RF	0,66	ECY 207	22
FYK 40 TF	FYK 508	YAR 208-2F	0,87	ECY 208	23,5
FYK 40 TR	FYK 508	YAR 208-2RF	0,87	ECY 208	23,5

Flanged Y-TECH units with a housing with an oval flange and grub screws, metric shafts
d **20 – 35** mm

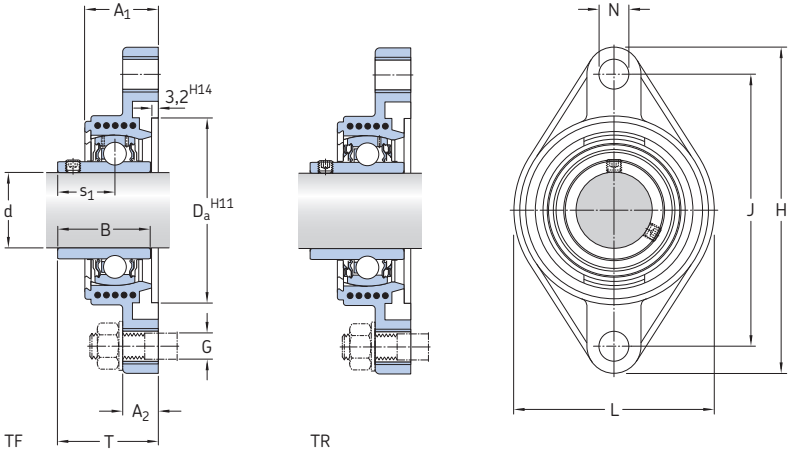

Dimensions												Basic load ratings		Fatigue load limit	Limiting speed	Designation
												dynamic	static		with shaft tolerance	Bearing unit
d	A_1	A_2	B	D_a	H	J	L	N	G	s_1	T	C	C_0	P_u	h6	
mm												kN		kN	r/min	–
20	29,5	15	31	50,8	112	90	60,5	12	10	18,3	37,3	12,7	6,55	0,28	8 500	**FYTBK 20 TF**
	29,5	15	31	50,8	112	90	60,5	12	10	18,3	37,3	12,7	6,55	0,28	5 000	**FYTBK 20 TR**
25	30	15	34,1	63,5	124	99	70	12	10	19,8	38,8	14	7,8	0,335	7 000	**FYTBK 25 TF**
	30	15	34,1	63,5	124	99	70	12	10	19,8	38,8	14	7,8	0,335	4 300	**FYTBK 25 TR**
30	33	15	38,1	76,2	142,5	116,5	83	12	10	22,2	42,2	19,5	11,2	0,475	6 300	**FYTBK 30 TF**
	33	15	38,1	76,2	142,5	116,5	83	12	10	22,2	42,2	19,5	11,2	0,475	3 800	**FYTBK 30 TR**
35	35	17	42,9	88,9	156	130	96	14,5	12	25,4	46,4	25,5	15,3	0,655	5 300	**FYTBK 35 TF**
	35	17	42,9	88,9	156	130	96	14,5	12	25,4	46,4	25,5	15,3	0,655	3 200	**FYTBK 35 TR**

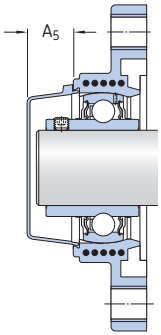

Designations Bearing unit	Separate components Housing	Bearing	**Mass** Bearing unit	**Appropriate end cover** Designation	Dimension A_5
–			kg	–	mm
FYTBK 20 TF	FYTBK 504	YAR 204-2F	0,24	ECY 204	18,5
FYTBK 20 TR	FYTBK 504	YAR 204-2RF	0,24	ECY 204	18,5
FYTBK 25 TF	FYTBK 505	YAR 205-2F	0,29	ECY 205	18
FYTBK 25 TR	FYTBK 505	YAR 205-2RF	0,29	ECY 205	18
FYTBK 30 TF	FYTBK 506	YAR 206-2F	0,44	ECY 206	20
FYTBK 30 TR	FYTBK 506	YAR 206-2RF	0,44	ECY 206	20
FYTBK 35 TF	FYTBK 507	YAR 207-2F	0,61	ECY 207	22
FYTBK 35 TR	FYTBK 507	YAR 207-2RF	0,61	ECY 207	22

Flanged Y-bearing units with a cast housing with a square flange and grub screws, metric shafts

d **12 – 60** mm

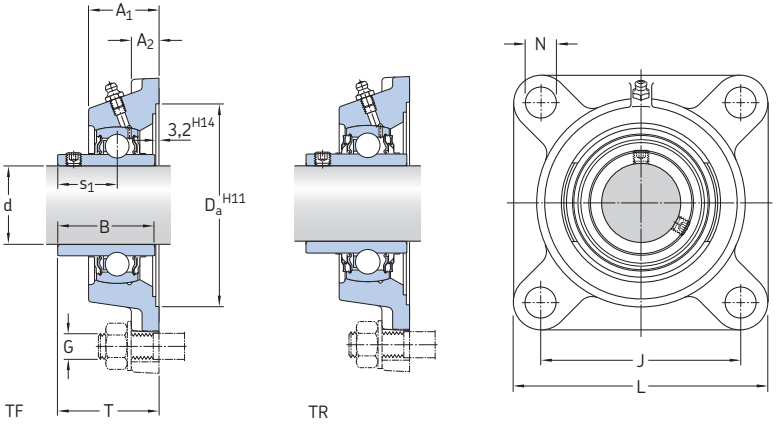

Dimensions											Basic load ratings		Fatigue load limit	Limiting speed	Designation
											dynamic	static		with shaft tolerance	Bearing unit
d	A_1	A_2	B	D_a	J	L	N	G	s_1	T	C	C_0	P_u	h6	
mm											kN		kN	r/min	–
12	26	11	27,4	55,6	54	76	11,5	10	15,9	32,9	9,56	4,75	0,2	9 500	**FY 12 TF**
15	26	11	27,4	55,6	54	76	11,5	10	15,9	32,9	9,56	4,75	0,2	9 500	**FY 15 TF**
17	26	11	27,4	55,6	54	76	11,5	10	15,9	32,9	9,56	4,75	0,2	9 500	**FY 17 TF**
20	29,5	11	31	68,3	63,5	86	11,5	10	18,3	37,3	12,7	6,55	0,28	8 500	**FY 20 TF**
	25,5	12	31	68,3	64	86	12	10	18,3	33,3	12,7	6,55	0,28	8 500	**FYJ 20 TF**
	29,5	11	31	68,3	63,5	86	11,5	10	18,3	37,3	12,7	6,55	0,28	5 000	**FY 20 TR**
25	30	12	34,1	74,6	70	95	11,5	10	19,8	38,8	14	7,8	0,335	7 000	**FY 25 TF**
	27	14	34,1	74,6	70	95	12	10	19,8	35,8	14	7,8	0,335	7 000	**FYJ 25 TF**
	30	12	34,1	74,6	70	95	11,5	10	19,8	38,8	14	7,8	0,335	4 300	**FY 25 TR**
30	32,5	13	38,1	93,7	82,5	108	11,5	10	22,2	42,2	19,5	11,2	0,475	6 300	**FY 30 TF**
	31	14	38,1	93,7	83	108	12	10	22,2	40,2	19,5	11,2	0,475	6 300	**FYJ 30 TF**
	32,5	13	38,1	93,7	82,5	108	11,5	10	22,2	42,2	19,5	11,2	0,475	3 800	**FY 30 TR**
35	34,5	13	42,9	106,4	92	118	14	12	25,4	46,4	25,5	15,3	0,655	5 300	**FY 35 TF**
	34	16	42,9	106,4	92	118	14	12	25,4	44,4	25,5	15,3	0,655	5 300	**FYJ 35 TF**
	34,5	13	42,9	106,4	92	118	14	12	25,4	46,4	25,5	15,3	0,655	3 200	**FY 35 TR**
40	38,5	14	49,2	115,9	101,5	130	14	12	30,2	54,2	30,7	19	0,8	4 800	**FY 40 TF**
	36	16	49,2	115,9	102	130	16	14	30,2	51,2	30,7	19	0,8	4 800	**FYJ 40 TF**
	38,5	14	49,2	115,9	101,5	130	14	12	30,2	54,2	30,7	19	0,8	2 800	**FY 40 TR**
45	39	14	49,2	119,1	105	137	16	14	30,2	54,2	33,2	21,6	0,915	4 300	**FY 45 TF**
	38	18	49,2	119,1	105	137	16	14	30,2	52,2	33,2	21,6	0,915	4 300	**FYJ 45 TF**
	39	14	49,2	119,1	105	137	16	14	30,2	54,2	33,2	21,6	0,915	2 400	**FY 45 TR**
50	43	15	51,6	125,4	111	143	18	16	32,6	60,6	35,1	23,2	0,98	4 000	**FY 50 TF**
	40	18	51,6	125,4	111	143	16	14	32,6	54,6	35,1	23,2	0,98	4 000	**FYJ 50 TF**
	43	15	51,6	125,4	111	143	18	16	32,6	60,6	35,1	23,2	0,98	2 200	**FY 50 TR**
55	47,5	16	55,6	150,8	130	162	18	16	33,4	64,4	43,6	29	1,25	3 600	**FY 55 TF**
	43	20	55,6	150,8	130	162	19	16	33,4	58,4	43,6	29	1,25	3 600	**FYJ 55 TF**
	47,5	16	55,6	150,8	130	162	18	16	33,4	64,4	43,6	29	1,25	1 900	**FY 55 TR**
60	52	17	65,1	161,9	143	175	18	16	39,7	73,7	52,7	36	1,53	3 400	**FY 60 TF**
	48	20	65,1	161,9	143	175	19	16	39,7	68,7	52,7	36	1,53	3 400	**FYJ 60 TF**
	52	17	65,1	161,9	143	175	18	16	39,7	73,7	52,7	36	1,53	1 800	**FY 60 TR**

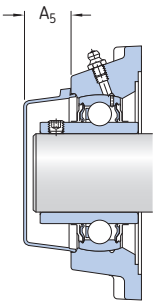

Designations Bearing unit	Separate components Housing	Bearing	**Mass** Bearing unit	**Appropriate end cover** Designation	Dimension A_5
–			kg	–	mm
FY 12 TF	FY 503 M	YAR 203/12-2F	0,47	–	–
FY 15 TF	FY 503 M	YAR 203/15-2F	0,45	–	–
FY 17 TF	FY 503 M	YAR 203-2F	0,44	–	–
FY 20 TF	FY 504 M	YAR 204-2F	0,60	ECY 204	18,5
FYJ 20 TF	FYJ 504	YAR 204-2F	0,65	–	–
FY 20 TR	FY 504 M	YAR 204-2RF	0,60	ECY 204	18,5
FY 25 TF	FY 505 M	YAR 205-2F	0,77	ECY 205	18
FYJ 25 TF	FYJ 505	YAR 205-2F	0,86	–	–
FY 25 TR	FY 505 M	YAR 205-2RF	0,77	ECY 205	18
FY 30 TF	FY 506 M	YAR 206-2F	1,10	ECY 206	20
FYJ 30 TF	FYJ 506	YAR 206-2F	1,20	–	–
FY 30 TR	FY 506 M	YAR 206-2RF	1,10	ECY 206	20
FY 35 TF	FY 507 M	YAR 207-2F	1,40	ECY 207	22
FYJ 35 TF	FYJ 507	YAR 207-2F	1,50	–	–
FY 35 TR	FY 507 M	YAR 207-2RF	1,40	ECY 207	22
FY 40 TF	FY 508 M	YAR 208-2F	1,90	ECY 208	23,5
FYJ 40 TF	FYJ 508	YAR 208-2F	1,80	–	–
FY 40 TR	FY 508 M	YAR 208-2RF	1,90	ECY 208	23,5
FY 45 TF	FY 509 M	YAR 209-2F	2,10	ECY 209	23
FYJ 45 TF	FYJ 509	YAR 209-2F	2,45	–	–
FY 45 TR	FY 509 M	YAR 209-2RF	2,10	ECY 209	23
FY 50 TF	FY 510 M	YAR 210-2F	2,50	ECY 210	29,5
FYJ 50 TF	FYJ 510	YAR 210-2F	3,15	–	–
FY 50 TR	FY 510 M	YAR 210-2RF	2,50	ECY 210	29,5
FY 55 TF	FY 511 M	YAR 211-2F	3,60	ECY 211	34
FYJ 55 TF	FYJ 511	YAR 211-2F	3,45	–	–
FY 55 TR	FY 511 M	YAR 211-2RF	3,60	ECY 211	34
FY 60 TF	FY 512 M	YAR 212-2F	4,60	ECY 212	35,5
FYJ 60 TF	FYJ 512	YAR 212-2F	4,50	–	–
FY 60 TR	FY 512 M	YAR 212-2RF	4,60	ECY 212	35,5

Flanged Y-bearing units with a cast housing with a square flange and grub screws, metric shafts

d **65 – 100** mm

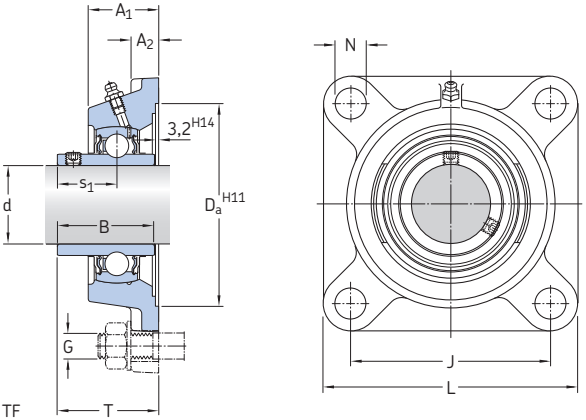

Dimensions											Basic load ratings		Fatigue load limit	Limiting speed	Designation
											dynamic	static		with shaft tolerance	Bearing unit
d	A_1	A_2	B	D_a	J	L	N	G	s_1	T	C	C_0	P_u	h6	
mm											kN		kN	r/min	–
65	52,5	17	68,3	161,9	149,5	187	18	16	42,9	76,9	57,2	40	1,7	3 000	**FY 65 TF**
	50	20	68,3	161,9	149	187	19	16	42,9	72,9	57,2	40	1,7	3 000	**FYJ 65 TF**
70	50,3	21,3	69,9	161,9	152	193	19	16	39,7	70,7	62,4	44	1,86	2 800	**FYJ 70 TF**
75	53,6	22,1	73,1	179,4	159	200	19	16	46,1	80,1	66,3	49	2,04	2 600	**FYJ 75 TF**
80	54,5	22	77,9	179,4	165	208	23	20	47,7	81,7	72,8	53	2,16	2 400	**FYJ 80 TF**
90	63,4	23,4	89	193,7	187	235	23	20	54	94	95,6	72	2,7	2 000	**FYJ 90 TF**
100	70	25	98,4	215,9	210	265	27	24	63,4	107,5	124	93	3,35	1 900	**FYJ 100 TF**

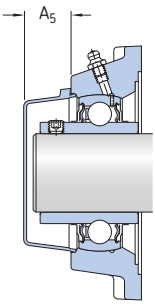

Designations Bearing unit	Separate components Housing	Bearing	**Mass** Bearing unit	**Appropriate end cover** Designation	Dimension A_5
–			kg	–	mm
FY 65 TF	FY 513 M	YAR 213-2F	5,30	ECY 213	35,5
FYJ 65 TF	FYJ 513	YAR 213-2F	5,80	–	–
FYJ 70 TF	FYJ 514	YAR 214-2F	6,00	–	–
FYJ 75 TF	FYJ 515	YAR 215-2F	6,80	–	–
FYJ 80 TF	FYJ 516	YAR 216-2F	7,60	–	–
FYJ 90 TF	FYJ 518	YAR 218-2F	11,5	–	–
FYJ 100 TF	FYJ 520	YAR 220-2F	15,2	–	–

Flanged Y-bearing units with a cast housing with a square flange and grub screws, inch shafts

d **1/2 – 1 1/4** in

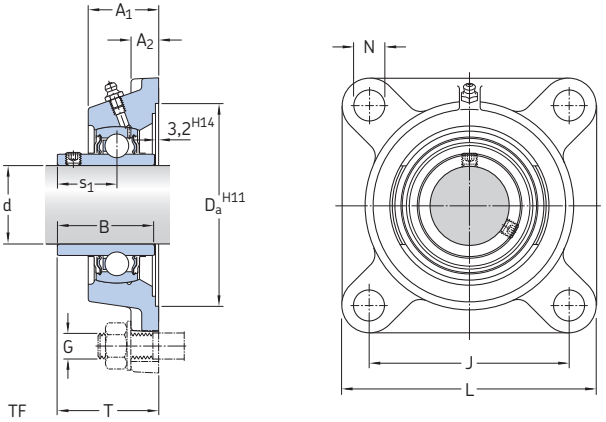

Dimensions									Designation Bearing unit
d	A_1	A_2	B	J	L	G	s_1	T	
in/*mm*									–
1/2	0.92	0.39	1.08	2.13	3.00	3/8	0.63	1.20	**FY 1/2 TF**
12,7	*23,4*	*9,9*	*27,4*	*54*	*76,2*	*10*	*15,9*	*30,6*	
5/8	0.92	0.39	1.08	2.13	3.00	3/8	0.63	1.20	**FY 5/8 TF**
15,875	*23,4*	*9,9*	*27,4*	*54*	*76,2*	*10*	*15,9*	*30,6*	
3/4	1.16	0.43	1.22	2.50	3.39	3/8	0.72	1.47	**FY 3/4 TF**
19,05	*29,5*	*11*	*31*	*63,5*	*86*	*10*	*18,3*	*37,3*	
	1.00	0.47	1.22	2.52	3.39	3/8	0.72	1.31	**FYJ 3/4 TF**
	25,5	*12*	*31*	*64*	*86*	*10*	*18,3*	*33,3*	
13/16	1.18	0.47	1.34	2.76	3.74	7/16	0.78	1.53	**FY 13/16 TF**
20,638	*30*	*12*	*34,1*	*70*	*95*	*10*	*19,8*	*38,8*	
7/8	1.18	0.47	1.34	2.76	3.74	7/16	0.78	1.53	**FY 7/8 TF**
22,225	*30*	*12*	*34,1*	*70*	*95*	*10*	*19,8*	*38,8*	
15/16	1.18	0.47	1.34	2.76	3.74	7/16	0.78	1.53	**FY 15/16 TF**
23,813	*30*	*12*	*34,1*	*70*	*95*	*10*	*19,8*	*38,8*	
1	1.18	0.47	1.34	2.76	3.74	3/8	0.78	1.53	**FY 1. TF**
25,4	*30*	*12*	*34,1*	*70*	*95*	*10*	*19,8*	*38,8*	
	1.06	0.55	1.34	2.76	3.74	3/8	0.78	1.41	**FYJ 1. TF**
	27	*14*	*34,1*	*70*	*95*	*10*	*19,8*	*35,8*	
1 1/16	1.28	0.51	1.50	3.25	4.25	7/16	0.87	1.66	**FY 1.1/16 TF**
26,9875	*32,5*	*13*	*38,1*	*82,5*	*108*	*10*	*22,2*	*42,2*	
1 1/8	1.28	0.51	1.50	3.25	4.25	7/16	0.87	1.66	**FY 1.1/8 TF**
28,575	*32,5*	*13*	*38,1*	*82,5*	*108*	*10*	*22,2*	*42,2*	
1 3/16	1.28	0.51	1.50	3.25	4.25	7/16	0.87	1.66	**FY 1.3/16 TF**
30,163	*32,5*	*13*	*38,1*	*82,5*	*108*	*10*	*22,2*	*42,2*	
1 1/4	1.36	0.51	1.69	3.62	4.65	1/2	1.00	1.83	**FY 1.1/4 TF**
31,75	*34,5*	*13*	*42,9*	*92*	*118*	*12*	*25,4*	*46,4*	
	1.34	0.51	1.69	3.62	4.65	1/2	1.00	1.75	**FYJ 1.1/4 TF**
	34	*16*	*42,9*	*92*	*118*	*12*	*25,4*	*44,4*	

Designations Bearing unit	Separate components Housing	 Bearing	**Basic load ratings** dynamic C	 static C_0	**Fatigue load** limit P_u	**Limiting speed** with shaft tolerance h6	**Mass** Bearing unit
–			lbf/*kN*		lbf/*kN*	r/min	lb/*kg*
FY 1/2 TF	FY 503 U	YAR 203-008-2F	2 150 *9,56*	1 070 *4,75*	50 *0,2*	9 500	1.00 *0,46*
FY 5/8 TF	FY 503 U	YAR 203-010-2F	2 150 *9,56*	1 070 *4,75*	50 *0,2*	9 500	1.05 *0.95*
FY 3/4 TF	FY 504 M	YAR 204-012-2F	2 860 *12,7*	1 470 *6,55*	60 *0,28*	8 500	1.35 *0,61*
FYJ 3/4 TF	FYJ 504	YAR 204-012-2F	2 860 *12,7*	1 470 *6,55*	60 *0,28*	8 500	1.45 *0,66*
FY 13/16 TF	FY 505 U	YAR 205-013-2F	3 150 *14*	1 760 *7,8*	80 *0,335*	7 000	1.80 *0,81*
FY 7/8 TF	FY 505 U	YAR 205-014-2F	3 150 *14*	1 760 *7,8*	80 *0,335*	7 000	1.75 *0,80*
FY 15/16 TF	FY 505 U	YAR 205-015-2F	3 150 *14*	1 760 *7,8*	80 *0,335*	7 000	1.70 *0,78*
FY 1. TF	FY 505 M	YAR 205-100-2F	3 150 *14*	1 760 *7,8*	80 *0,335*	7 000	1.70 *0,77*
FYJ 1. TF	FYJ 505	YAR 205-100-2F	3 150 *14*	1 760 *7,8*	80 *0,335*	7 000	1.90 *0,86*
FY 1.1/16 TF	FY 506 U	YAR 206-101-2F	4 390 *19,5*	2 520 *11,2*	110 *0,475*	6 300	2.45 *1,10*
FY 1.1/8 TF	FY 506 U	YAR 206-102-2F	4 390 *19,5*	2 520 *11,2*	110 *0,475*	6 300	2.50 *1,10*
FY 1.3/16 TF	FY 506 U	YAR 206-103-2F	4 390 *19,5*	2 520 *11,2*	110 *0,475*	6 300	2.40 *1,10*
FY 1.1/4 TF	FY 507 M	YAR 207-104-2F	5 740 *25,5*	3 440 *15,3*	150 *0,655*	5 300	3.20 *1,45*
FYJ 1.1/4 TF	FYJ 507	YAR 207-104-2F	5 740 *25,5*	3 440 *15,3*	150 *0,655*	5 300	3.40 *1,55*

Flanged Y-bearing units with a cast housing with a square flange and grub screws, inch shafts

d **1 5/16 – 1 15/16** in

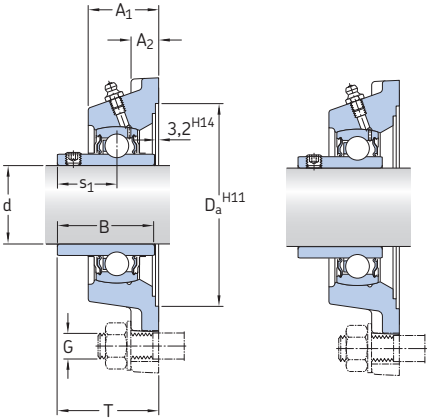

FY .. TF

FY .. RM

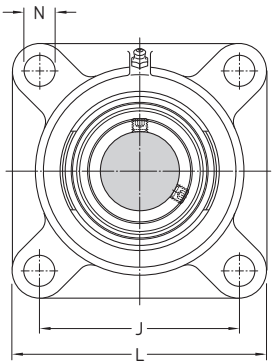

Dimensions									Designation Bearing unit
d	A_1	A_2	B	J	L	G	s_1	T	
in/*mm*									–
1 5/16	1.36	0.51	1.69	3.62	4.65	1/2	1.00	1.83	**FY 1.5/16 TF**
33,338	34,5	13	42,9	92	118	12	25,4	46,4	
1 3/8	1.36	0.51	1.69	3.62	4.65	1/2	1.00	1.83	**FY 1.3/8 TF**
34,925	*34,5*	*13*	*42,9*	*92*	*118*	*12*	*25,4*	*46,4*	
1 7/16	1.36	0.51	1.69	3.62	4.65	1/2	1.00	1.83	**FY 1.7/16 TF**
36,513	*34,5*	*13*	*42,9*	*92*	*118*	*12*	*25,4*	*46,4*	
	1.52	0.55	1.94	4.00	5.12	1/2	1.19	2.13	**FYM 1.7/16 TF**
	38,5	*14*	*49,2*	*101,5*	*130*	*12*	*30,2*	*54,2*	
1 1/2	1.52	0.55	1.94	4.00	5.12	1/2	1.19	2.13	**FY 1.1/2 TF**
38,1	*38,5*	*14*	*49,2*	*101,5*	*130*	*12*	*30,2*	*54,2*	
	1.42	0.63	1.94	4.02	5.12	9/16	1.19	2.02	**FYJ 1.1/2 TF**
	36	*16*	*49,2*	*102*	*130*	*14*	*30,2*	*51,2*	
	1.54	0.55	1.94	4.13	5.39	9/16	1.19	2.13	**FYM 1.1/2 TF**
	39	*14*	*49,2*	*105*	*137*	*14*	*30,2*	*54,2*	
1 5/8	1.54	0.55	1.94	4.13	5.39	9/16	1.19	2.13	**FY 1.5/8 TF**
41,275	*39*	*14*	*49,2*	*105*	*137*	*14*	*30,2*	*54,2*	
1 11/16	1.69	0.59	2.03	4.37	5.63	9/16	1.28	2.39	**FYM 1.11/16 TF**
42,863	*43*	*15*	*51,6*	*111*	*143*	*14*	*32,6*	*60,6*	
1 3/4	1.54	0.55	1.94	4.13	5.39	9/16	1.19	2.13	**FY 1.3/4 TF**
44,45	*39*	*14*	*49,2*	*105*	*137*	*14*	*30,2*	*54,2*	
	1.54	0.55	1.63	4.13	5.39	9/16	1.20	2.13	**FY 1.3/4 RM**
	39	*14*	*41,5*	*105*	*137*	*14*	*30,5*	*54,2*	
	1.50	0.71	1.94	4.13	5.39	9/16	1.19	2.06	**FYJ 1.3/4 TF**
	38	*18*	*49,2*	*105*	*137*	*14*	*30,2*	*52,2*	
	1.69	0.59	2.03	4.37	5.63	9/16	1.28	2.39	**FYM 1.3/4 TF**
	43	*15*	*51,6*	*111*	*143*	*14*	*32,6*	*60,6*	
1 15/16	1.69	0.59	2.03	4.37	5.63	9/16	1.28	2.39	**FY 1.15/16 TF**
49,213	*43*	*15*	*51,6*	*111*	*143*	*14*	*32,6*	*60,6*	
	1.87	0.63	2.19	5.12	6.38	5/8	1.31	2.54	**FYM 1.15/16 TF**
	47,5	*16*	*55,6*	*130*	*162*	*16*	*33,4*	*64,4*	

Designations Bearing unit	Separate components Housing	 Bearing	**Basic load ratings** dynamic C	 static C_0	**Fatigue load** limit P_u	**Limiting speed** with shaft tolerance h6	**Mass** Bearing unit
–			lbf/*kN*		lbf/*kN*	r/min	lb/*kg*
FY 1.5/16 TF	FY 507 U	YAR 207-105-2F	5 740 *25,5*	3 440 *15,3*	150 *0,655*	5 300	3.20 *1,45*
FY 1.3/8 TF	FY 507 U	YAR 207-106-2F	5 740 *25,5*	3 440 *15,3*	150 *0,655*	5 300	3.15 *1,40*
FY 1.7/16 TF	FY 507 U	YAR 207-107-2F	5 740 *25,5*	3 440 *15,3*	150 *0,655*	5 300	3.05 *1,40*
FYM 1.7/16 TF	FY 508 U	YAR 208-107-2F	6 910 *30,7*	4 280 *19*	180 *0,8*	4 800	4.50 *2,00*
FY 1.1/2 TF	FY 508 M	YAR 208-108-2F	6 910 *30,7*	4 280 *19*	180 *0,8*	4 800	4.20 *1,90*
FYJ 1.1/2 TF	FYJ 508	YAR 208-108-2F	6 910 *30,7*	4 280 *19*	180 *0,8*	4 800	4.30 *1,95*
FYM 1.1/2 TF	FY 509 U	YAR 209-108-2F	7 470 *33,2*	4 860 *21,6*	210 *0,915*	4 300	5.50 *2,50*
FY 1.5/8 TF	FY 509 U	YAR 209-110-2F	7 470 *33,2*	4 860 *21,6*	210 *0,915*	4 300	4.40 *2,20*
FYM 1.11/16 TF	FY 510 U	YAR 210-111-2F	7 900 *35.1*	5 220 *23.2*	220 *0.98*	4 000	5.50 *2,50*
FY 1.3/4 TF	FY 509 M	YAR 209-112-2F	7 470 *33,2*	4 860 *21,6*	210 *0,915*	4 300	4.75 *2,15*
FY 1.3/4 RM	FY 509 U	YAT 209-112	7 470 *33,2*	4 860 *21,6*	210 *0,915*	4 300	4.40 *2,00*
FYJ 1.3/4 TF	FYJ 509	YAR 209-112-2F	7 470 *33,2*	4 860 *21,6*	210 *0,915*	4 300	5.50 *2,50*
FYM 1.3/4 TF	FY 510 U	YAR 210-112-2F	7 900 *35,1*	5 220 *23,2*	220 *0,98*	4 000	5.50 *2,50*
FY 1.15/16 TF	FY 510 U	YAR 210-115-2F	7 900 *35,1*	5 220 *23,2*	220 *0,98*	4 000	5.25 *2,50*
FYM 1.15/16 TF	FY 511 U	YAR 211-115-2F	9 810 *43,6*	6 530 *29*	280 *1,25*	3 600	9.00 *4,00*

Flanged Y-bearing units with a cast housing with a square flange and grub screws, inch shafts

d **2 – 3** in

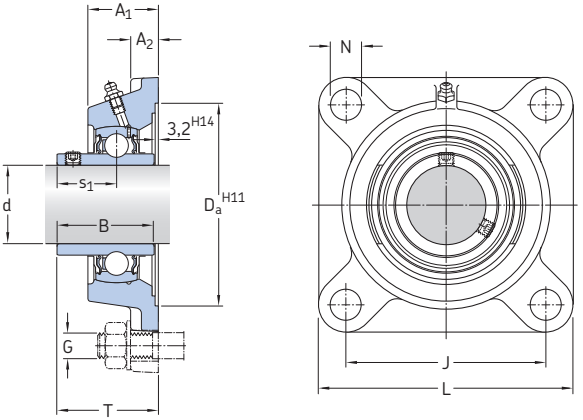

Dimensions									Designation Bearing unit
d	A_1	A_2	B	J	L	G	s_1	T	
in/*mm*									–
2	1.87	0.63	2.19	5.12	6.38	5/8	1.31	2.54	**FY 2. TF**
50,8	*47,5*	*16*	*55,6*	*130*	*162*	*16*	*33,4*	*64,4*	
	1.69	0.79	2.19	5.12	6.38	5/8	1.31	2.30	**FYJ 2. TF**
	43	*20*	*55,6*	*130*	*162*	*16*	*33,4*	*58,4*	
2 3/16	1.87	0.63	2.19	5.12	6.38	5/8	1.31	2.54	**FY 2.3/16 TF**
55,563	*47,5*	*16*	*55.6*	*130*	*162*	*16*	*33,4*	*64,4*	
	2.05	0.67	2.56	5.63	6.89	5/8	1.56	2.90	**FYM 2.3/16 TF**
	52	*17*	*65,1*	*143*	*175*	*16*	*39,7*	*73,7*	
2 1/4	2.05	0.67	2.56	5.63	6.89	5/8	1.56	2.90	**FY 2.1/4 TF**
57,15	*52*	*17*	*65,1*	*143*	*175*	*16*	*39,7*	*73,7*	
2 7/16	2.05	0.67	2.56	5.63	6.89	5/8	1.56	2.90	**FY 2.7/16 TF**
61,913	*52*	*17*	*65,1*	*143*	*175*	*16*	*39,7*	*73,7*	
	2.25	0.69	2.75	5.88	7.37	5/8	1.56	3.00	**FYM 2.7/16 TF**
	57,15	*17,5*	*69,6*	*149,3*	*187,5*	*16*	*39,7*	*76,2*	
2 1/2	2.07	0.67	2.69	5.89	7.36	5/8	1.69	3.03	**FY 2.1/2 TF**
63,5	*52,5*	*17*	*68,3*	*149,5*	*187*	*16*	*42,9*	*76,9*	
	1.97	0.78	2.69	5.87	7.36	5/8	1.69	2.87	**FYJ 2.1/2 TF**
	50	*20*	*68,3*	*149*	*187*	*16*	*42,9*	*72,9*	
2 11/16	2.07	0.65	2.69	5.89	7.36	5/8	1.69	2.85	**FY 2.11/16 TF**
68,263	*52,5*	*16,5*	*68,3*	*149,5*	*187*	*16*	*42,9*	*72,4*	
2 3/4	2.56	0.75	2.88	6.00	7.75	3/4	1.82	3.44	**FY 2.3/4 TF**
69,85	*65,1*	*19*	*73,1*	*152,4*	*197*	*20*	*46,1*	*87,4*	
2 15/16	2.56	0.75	2.88	6.00	7.75	3/4	1.82	3.44	**FY 2.15/16 TF**
74,613	*65,1*	*19*	*73,1*	*152,4*	*197*	*20*	*46,1*	*87.4*	
	2.31	0.87	3.07	6.00	7.75	3/4	1.88	3.25	**FYM 2.15/16 TF**
	58,7	*22,2*	*77,9*	*152,4*	*197*	*20*	*47,7*	*82,6*	
3	2.31	0.87	3.07	6.00	7.75	3/4	1.88	3.25	**FYM 3. TF**
76,2	*58,7*	*22,2*	*77,9*	*152,4*	*197*	*20*	*47,7*	*82,6*	

Designations Bearing unit	Separate components Housing	 Bearing	**Basic load ratings** dynamic C	 static C_0	**Fatigue load** limit P_u	**Limiting speed** with shaft tolerance h6	**Mass** Bearing unit
–			lbf/*kN*		lbf/*kN*	r/min	lb/*kg*
FY 2. TF	FY 511 M	YAR 211-200-2F	9 810 *43,6*	6 530 *29*	280 *1,25*	3 600	8.25 *3,75*
FYJ 2. TF	FYJ 511	YAR 211-200-2F	9 810 *43,6*	6 530 *29*	280 *1,25*	3 600	7.95 *3,60*
FY 2.3/16 TF	FY 511 U	YAR 211-203-2F	9 810 *43,6*	6 530 *29*	280 *1,25*	3 600	7.85 *3,55*
FYM 2.3/16 TF	FY 512 U	YAR 212-203-2F	11 860 *52,7*	8 100 *36*	340 *1,53*	3 400	11.0 *5,00*
FY 2.1/4 TF	FY 512 U	YAR 212-204-2F	11 860 *52,7*	8 100 *36*	340 *1,53*	3 400	10.5 *4,75*
FY 2.7/16 TF	FY 512 U	YAR 212-207-2F	11 860 *52,7*	8 100 *36*	340 *1,53*	3 400	10.0 *4,60*
FYM 2.7/16 TF	FY 514 U	YAR 214-207-2F	14 040 *62,4*	9 900 *44*	420 *1,86*	2 800	13.0 *6,0*
FY 2.1/2 TF	FY 513 M	YAR 213-208-2F	12 870 *57,2*	9 000 *40*	380 *1,7*	3 000	11.9 *5,40*
FYJ 2.1/2 TF	FYJ 513	YAR 213-208-2F	12 870 *57,2*	9 000 *40*	380 *1,7*	3 000	13.0 *5,90*
FY 2.11/16 TF	FY 513 U	YAR 213-211-2F	12 870 *57,2*	9 000 *40*	380 *1,7*	3 000	11.5 *5,10*
FY 2.3/4 TF	FY 515 U	YAR 215-212-2F	14 920 *66,3*	11 030 *49*	460 *2,04*	2 600	13.5 *6,10*
FY 2.15/16 TF	FY 515 U	YAR 215-215-2F	14 920 *66,3*	11 030 *49*	460 *2,04*	2 600	18.0 *8,15*
FYM 2.15/16 TF	FY 516 U	YAR 216-215-2F	16 380 *72,8*	11 930 *53*	490 *2,16*	2 400	17.5 *8,00*
FYM 3. TF	FY 516 U	YAR 216-300-2F	16 380 *72,8*	11 930 *53*	490 *2,16*	2 400	17.5 *8,00*

Flanged Y-bearing units with a cast housing with a square flange and an eccentric locking collar, metric shafts

d **15 – 60** mm

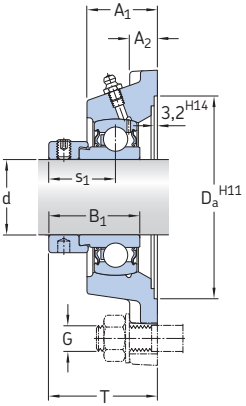

FM

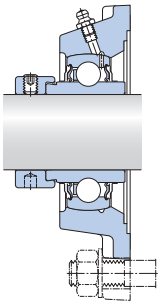

WF

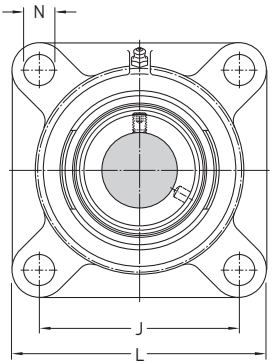

Dimensions											Basic load ratings		Fatigue load limit	Limiting speed	Designation
											dynamic	static		with shaft tolerance h6	Bearing unit
d	A_1	A_2	B_1	D_a	J	L	N	G	s_1	T	C	C_0	P_u		
mm											kN		kN	r/min	–
15	26	11	28,6	55,6	54	76	11,5	10	22,1	39,1	9,56	4,75	0,2	9 500	**FY 15 FM**
17	26	11	28,6	55,6	54	76	11,5	10	22,1	39,1	9,56	4,75	0,2	9 500	**FY 17 FM**
20	29,5	11	31	68,3	63,5	86	11,5	10	23,5	42,5	12,7	6,55	0,28	8 500	**FY 20 FM**
	29,5	11	43,7	68,3	63,5	86	11,5	10	26,6	45,6	12,7	6,55	0,28	8 500	**FY 20 WF**
25	30	12	31	74,6	70	95	11,5	10	23,5	42,5	14	7,8	0,335	7 000	**FY 25 FM**
	30	12	44,4	74,6	70	95	11,5	10	26,9	45,6	14	7,8	0,335	7 000	**FY 25 WF**
30	32,5	13	35,7	93,7	82,5	108	11,5	10	26,7	46,7	19,5	11,2	0,475	6 300	**FY 30 FM**
	32,5	13	48,4	93,7	82,5	108	11,5	10	30,1	50,1	19,5	11,2	0,475	6 300	**FY 30 WF**
35	34,5	13	38,9	106,4	92	118	14	12	29,4	50,4	25,5	15,3	0,655	5 300	**FY 35 FM**
	34,5	13	51,1	106,4	92	118	14	12	32,3	53,3	25,5	15,3	0,655	5 300	**FY 35 WF**
40	38,5	14	43,7	115,9	101,5	130	14	12	32,7	56,7	30,7	19	0,8	4 800	**FY 40 FM**
	38,5	14	56,3	115,9	101,5	130	14	12	34,9	58,9	30,7	19	0,8	4 800	**FY 40 WF**
45	39	14	43,7	119,1	105	137	16	14	32,7	56,7	33,2	21,6	0,915	4 300	**FY 45 FM**
	39	14	56,3	119,1	105	137	16	14	34,9	58,9	33,2	21,6	0,915	4 300	**FY 45 WF**
50	43	15	43,7	125,4	111	143	18	16	32,7	60,7	35,1	23,2	0,98	4 000	**FY 50 FM**
	43	15	62,7	125,4	111	143	18	16	38,1	66,1	35,1	23,2	0,98	4 000	**FY 50 WF**
55	47,5	16	48,4	150,8	130	162	18	16	36,4	67,4	43,6	29	1,25	3 600	**FY 55 FM**
	47,5	16	71,4	150,8	130	162	18	16	43,6	74,6	43,6	29	1,25	3 600	**FY 55 WF**
60	52	17	53,1	161,9	143	175	18	16	39,6	73,6	52,7	36	1,53	3 400	**FY 60 FM**
	52	17	77,8	161,9	143	175	18	16	46,8	80,8	52,7	36	1,53	3 400	**FY 60 WF**

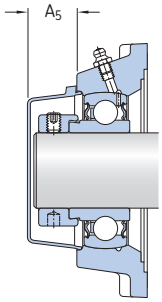

Designations			Mass	Appropriate end cover	
Bearing unit	Separate components		Bearing unit	Designation	Dimension
	Housing	Bearing			A_5
–			kg	–	mm
FY 15 FM	FY 503 M	YET 203/15	0,47	–	–
FY 17 FM	FY 503 M	YET 203	0,48	–	–
FY 20 FM	FY 504 M	YET 204	0,62	ECY 204	18,5
FY 20 WF	FY 504 M	YEL 204-2F	0,65	ECY 204	18,5
FY 25 FM	FY 505 M	YET 205	0,78	ECY 205	18
FY 25 WF	FY 505 M	YEL 205-2F	0,83	ECY 205	18
FY 30 FM	FY 506 M	YET 206	1,10	ECY 206	20
FY 30 WF	FY 506 M	YEL 206-2F	1,20	ECY 206	20
FY 35 FM	FY 507 M	YET 207	1,50	ECY 207	22
FY 35 WF	FY 507 M	YEL 207-2F	1,55	ECY 207	22
FY 40 FM	FY 508 M	YET 208	1,95	ECY 208	23,5
FY 40 WF	FY 508 M	YEL 208-2F	2,05	ECY 208	23,5
FY 45 FM	FY 509 M	YET 209	2,15	ECY 209	23
FY 45 WF	FY 509 M	YEL 209-2F	2,25	ECY 209	23
FY 50 FM	FY 510 M	YET 210	2,55	ECY 210	29,5
FY 50 WF	FY 510 M	YEL 210-2F	2,70	ECY 210	29,5
FY 55 FM	FY 511 M	YET 211	3,60	ECY 211	34
FY 55 WF	FY 511 M	YEL 211-2F	3,85	ECY 211	34
FY 60 FM	FY 512 M	YET 212	4,70	ECY 212	35,5
FY 60 WF	FY 512 M	YEL 212-2F	5,00	ECY 212	35,5

Flanged Y-bearing units with a cast housing with a square flange and an eccentric locking collar, inch shafts

d **5/8 – 1 3/4** in

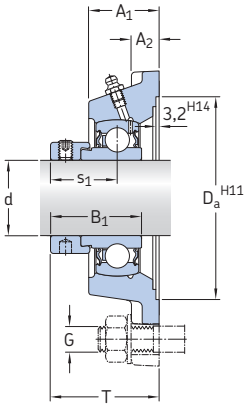

FM

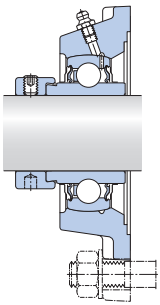

WF

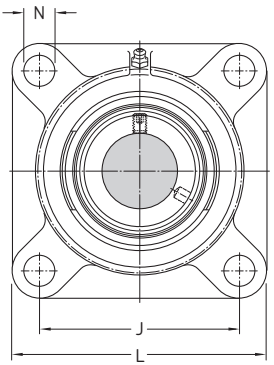

Dimensions									**Designation** Bearing unit
d	A_1	A_2	B_1	J	L	G	s_1	T	
in/*mm*									–
5/8	0.92	0.39	1.13	2.13	3.00	3/8	0.87	1.45	**FY 5/8 FM**
15,875	*23,4*	*9,9*	*28,6*	*54*	*76,2*	*10*	*22,1*	*36,8*	
3/4	1.16	0.43	1.22	2.50	3.39	3/8	0.93	1.68	**FY 3/4 FM**
19,05	*29,5*	*11*	*31*	*63,5*	*86*	*10*	*23,5*	*42,5*	
7/8	1.18	0.47	1.22	2.76	3.74	7/16	0.93	1.67	**FY 7/8 FM**
22,225	*30*	*12*	*31*	*70*	*95*	*10*	*23,5*	*42,5*	
1	1.18	0.47	1.22	2.76	3.74	7/16	0.93	1.67	**FY 1. FM**
25,4	*30*	*12*	*31*	*70*	*95*	*10*	*23,5*	*42,5*	
	1.18	0.47	1.75	2.76	3.74	7/16	1.06	1.81	**FY 1. WF**
	30	*12*	*44,4*	*70*	*95*	*10*	*26,9*	*45,9*	
1 1/8	1.28	0.51	1.41	3.25	4.25	7/16	1.05	1.84	**FY 1.1/8 FM**
28,575	*32,5*	*13*	*35,7*	*82,5*	*108*	*10*	*26,7*	*46,7*	
1 3/16	1.28	0.51	1.41	3.25	4.25	7/16	1.05	1.84	**FY 1.3/16 FM**
30,163	*32,5*	*13*	*35,7*	*82,5*	*108*	*10*	*26,7*	*46,7*	
1 1/4	1.36	0.51	1.53	3.62	4.65	1/2	1.16	1.98	**FY 1.1/4 FM**
31,75	*34,5*	*13*	*38,9*	*92*	*118*	*12*	*29,4*	*50,4*	
	1.36	0.51	2.01	3.62	4.65	1/2	1.27	2.10	**FY 1.1/4 WF**
	34,5	*13*	*51,1*	*92*	*118*	*12*	*32,3*	*53,3*	
1 3/8	1.36	0.51	1.53	3.62	4.65	1/2	1.16	1.98	**FY 1.3/8 FM**
34,925	*34,5*	*13*	*38,9*	*92*	*118*	*12*	*29,4*	*50,4*	
1 7/16	1.36	0.51	1.53	3.62	4.65	1/2	1.16	1.98	**FY 1.7/16 FM**
36,513	*34,5*	*13*	*38,9*	*92*	*118*	*12*	*29,4*	*50,4*	
1 1/2	1.52	0.55	1.72	4.00	5.12	1/2	1.29	2.22	**FY 1.1/2 FM**
38,1	*38,5*	*14*	*43,7*	*101,5*	*130*	*12*	*32,7*	*56,5*	
	1.52	0.55	2.22	4.00	5.12	1/2	1.37	2.32	**FY 1.1/2 WF**
	38,5	*14*	*56,3*	*101,5*	*130*	*12*	*34,9*	*58,9*	
1 11/16	1.54	0.55	1.72	4.13	5.39	9/16	1.29	2.22	**FY 1.11/16 FM**
42,863	*39*	*14*	*43,7*	*105*	*137*	*14*	*32,7*	*56,5*	
1 3/4	1.54	0.55	1.72	4.13	5.39	9/16	1.29	2.22	**FY 1.3/4 FM**
44,45	*39*	*14*	*43,7*	*105*	*137*	*14*	*32,7*	*56,5*	

Designations Bearing unit	Separate components Housing	Bearing	**Basic load ratings** dynamic C	static C_0	**Fatigue load limit** P_u	**Limiting speed** with shaft tolerance h6	**Mass** Bearing unit
–			lbf/*kN*		lbf/*kN*	r/min	lb/*kg*
FY 5/8 FM	FY 503 U	YET 203-010	2 150 *9,56*	1 070 *4,75*	50 *0,2*	9 500	1.05 *0,47*
FY 3/4 FM	FY 504 U	YET 204-012	2 860 *12,7*	1 470 *6,55*	60 *0,28*	8 500	1.40 *0,63*
FY 7/8 FM	FY 505 U	YET 205-014	3 150 *14*	1 760 *7,8*	80 *0,335*	7 000	1.80 *0,81*
FY 1. FM	FY 505 U	YET 205-100	3 150 *14*	1 760 *7,8*	80 *0,335*	7 000	1.70 *0,78*
FY 1. WF	FY 505 U	YEL 205-100-2F	3 150 *14*	1 760 *7,8*	80 *0,335*	7 000	1.80 *0,82*
FY 1.1/8 FM	FY 506 U	YET 206-102	4 390 *19,5*	2 520 *11,2*	110 *0,475*	6 300	2.50 *1,10*
FY 1.3/16 FM	FY 506 U	YET 206-103	4 390 *19,5*	2 520 *11,2*	110 *0,475*	6 300	2.45 *1,10*
FY 1.1/4 FM	FY 507 U	YET 207-104	5 740 *25,5*	3 440 *15,3*	150 *0,655*	5 300	3.40 *1,55*
FY 1.1/4 WF	FY 507 U	YEL 207-104-2F	5 740 *25,5*	3 440 *15,3*	150 *0,655*	5 300	3.55 *1,60*
FY 1.3/8 FM	FY 507 U	YET 207-106	5 740 *25,5*	3 440 *15,3*	150 *0,655*	5 300	3.25 *1,50*
FY 1.7/16 FM	FY 507 U	YET 207-107	5 740 *25,5*	3 440 *15,3*	150 *0,655*	5 300	3.20 *1,45*
FY 1.1/2 FM	FY 508 U	YET 208-108	6 910 *30,7*	4 280 *19*	180 *0,8*	4 800	4.40 *2,00*
FY 1.1/2 WF	FY 508 U	YEL 208-108-2F	6 910 *30,7*	4 280 *19*	180 *0,8*	4 800	4.65 *2,10*
FY 1.11/16 FM	FY 509 U	YET 209-111	7 470 *33,2*	4 860 *21,6*	210 *0,915*	4 300	4.85 *2,20*
FY 1.3/4 FM	FY 509 U	YET 209-112	7 470 *33,2*	4 860 *21,6*	210 *0,915*	4 300	4.75 *2,15*

Flanged Y-bearing units with a cast housing with a square flange and an eccentric locking collar, inch shafts

d **1 15/16 – 2 7/16** in

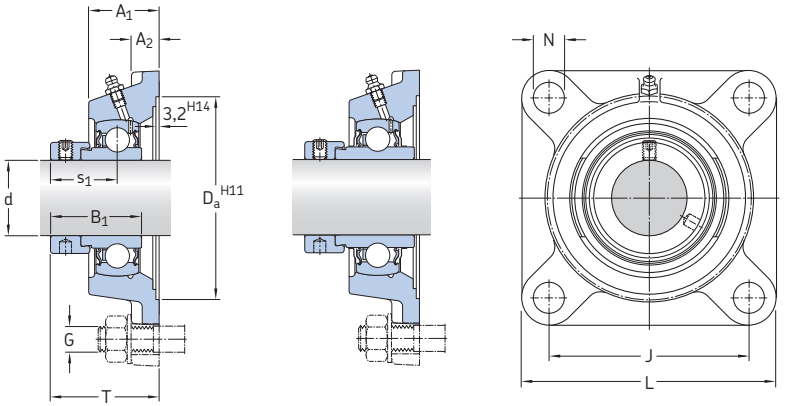

FM WF

Dimensions									Designation Bearing unit
d	A_1	A_2	B_1	J	L	G	s_1	T	
in/*mm*									–
1 15/16	1.69	0.59	1.72	4.37	5.63	9/16	1.29	2.39	**FY 1.15/16 FM**
49,213	*43*	*15*	*43,7*	*111*	*143*	*14*	*32,7*	*60,7*	
	1.69	0.59	2.47	4.37	5.63	9/16	1.50	2.60	**FY 1.15/16 WF**
	43	*15*	*62,7*	*111*	*143*	*14*	*38,1*	*66,1*	
2	1.87	0.63	1.91	5.12	6.38	5/8	1.43	2.65	**FY 2. FM**
50,8	*47,5*	*16*	*48,4*	*130*	*162*	*16*	*36,4*	*67,4*	
2 3/16	1.87	0.63	1.91	5.12	6.38	5/8	1.43	2.65	**FY 2.3/16 FM**
55,563	*47,5*	*16*	*48,4*	*130*	*162*	*16*	*36,4*	*67,4*	
	1.87	0.63	2.81	5.12	6.38	5/8	1.72	2.94	**FY 2.3/16 WF**
	47,5	*16*	*71,4*	*130*	*162*	*16*	*43,6*	*74,6*	
2 7/16	2.05	0.67	3.06	5.63	6.89	5/8	1.84	3.18	**FY 2.7/16 WF**
61,913	*52*	*17*	*77,8*	*143*	*175*	*16*	*46,8*	*80,8*	

Designations Bearing unit	Separate components Housing	 Bearing	**Basic load ratings** dynamic C	 static C_0	**Fatigue load limit** P_u	**Limiting speed** with shaft tolerance h6	**Mass** Bearing unit
–			lbf/*kN*		lbf/*kN*	r/min	lb/*kg*
FY 1.15/16 FM	FY 510 U	YET 210-115	7 900 *35,1*	5 220 *23,2*	220 *0,98*	4 000	5.60 *2,55*
FY 1.15/16 WF	FY 510 U	YEL 210-115-2F	7 900 *35,1*	5 220 *23,2*	220 *0,98*	4 000	6.05 *2,75*
FY 2. FM	FY 511 U	YET 211-200	9 810 *43,6*	6 530 *29*	280 *1,25*	3 600	8.25 *3,75*
FY 2.3/16 FM	FY 511 U	YET 211-203	9 810 *43,6*	6 530 *29*	280 *1,25*	3 600	8,00 *3,65*
FY 2.3/16 WF	FY 511 U	YEL 211-203-2F	9 810 *43,6*	6 530 *29*	280 *1,25*	3 600	8.50 *3,85*
FY 2.7/16 WF	FY 512 U	YEL 212-207-2F	11 860 *52,7*	8 100 *36*	340 *1,53*	3 400	11.0 *5,05*

Flanged Y-bearing units with a cast housing with a square flange and an adapter sleeve, metric shafts

d **20 – 60** mm

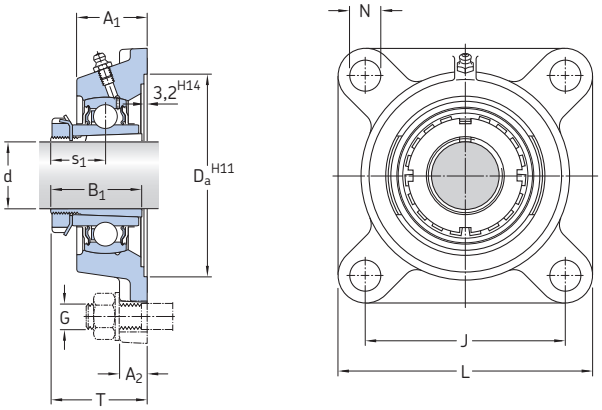

Dimensions											Basic load ratings		Fatigue load limit	Designations[1]	
											dynamic	static		Bearing unit	Adapter sleeve
d	A_1	A_2	B_1	D_a	J	L	N	G	s_1	T	C	C_0	P_u		
mm											kN		kN	–	
20	27	14	35	74,6	70	95	12	10	20	36	14	7,8	0,335	**FYJ 25 KF**	**H 2305**
25	31	14	38	93,7	83	108	12	10	22	40	19,5	11,2	0,475	**FYJ 30 KF**	**H 2306**
30	34	16	43	106,4	92	118	14	12	24,3	43,3	25,5	15,3	0,655	**FYJ 35 KF**	**H 2307**
35	36	16	46	115,9	102	130	16	14	27	48	30,7	19	0,8	**FYJ 40 KF**	**H 2308**
40	38	18	50	119,1	105	137	16	14	28,5	50,5	33,2	21,6	0,915	**FYJ 45 KF**	**H 2309**
45	40	18	55	125,4	111	143	16	14	30,5	52,5	35,1	23,2	0,98	**FYJ 50 KF**	**H 2310**
50	43	20	59	150,8	130	162	19	16	32,5	57,5	43,6	29	1,25	**FYJ 55 KF**	**H 2311**
55	48	20	62	161,9	143	175	19	16	34,3	63,3	52,7	36	1,53	**FYJ 60 KF**	**H 2312**
60	50	20	65	161,9	149	187	19	16	35,8	65,8	57,2	40	1,7	**FYJ 65 KF**	**H 2313**

[1] Bearing unit and adapter sleeve to be ordered separately

Designations Bearing unit without adapter sleeve	Separate components of the bearing unit Housing	Bearing	**Limiting speed**	**Mass** Bearing unit + sleeve
–			r/min	kg
FYJ 25 KF	FYJ 505	YSA 205-2FK	7 000	0,73
FYJ 30 KF	FYJ 506	YSA 206-2FK	6 300	1,05
FYJ 35 KF	FYJ 507	YSA 207-2FK	5 300	1,35
FYJ 40 KF	FYJ 508	YSA 208-2FK	4 800	1,75
FYJ 45 KF	FYJ 509	YSA 209-2FK	4 300	2,10
FYJ 50 KF	FYJ 510	YSA 210-2FK	4 000	2,80
FYJ 55 KF	FYJ 511	YSA 211-2FK	3 600	3,60
FYJ 60 KF	FYJ 512	YSA 212-2FK	3 400	4,60
FYJ 65 KF	FYJ 513	YSA 213-2FK	3 000	6,00

Flanged Y-bearing units with a cast housing with a square flange and an adapter sleeve, inch shafts

d **3/4 – 2 1/8** in

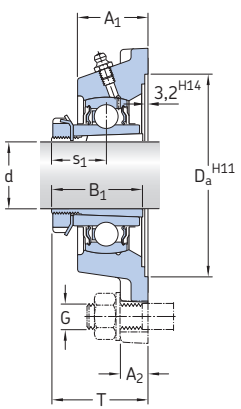

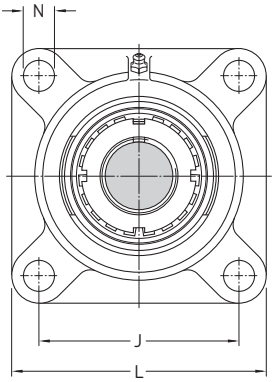

Dimensions											Designations[1]	
											Bearing unit	Adapter sleeve
d	A_1	A_2	B_1	D_a	J	L	N	G	s_1	T		
in/*mm*											–	
3/4 *19,05*	1.06 *27*	0.55 *14*	1.38 *35*	2.94 *74,6*	2.76 *70*	3.74 *95*	0.47 *12*	3/8 *10*	0.79 *20*	1.42 *36*	**FYJ 25 KF**	**HE 2305**
15/16 *23,813*	1.22 *31*	0.55 *14*	1.50 *38*	3.69 *93,7*	3.27 *83*	4.25 *108*	0.47 *12*	3/8 *10*	0.87 *22*	1.57 *40*	**FYJ 30 KF**	**HA 2306**
1 *25,4*	1.22 *31*	0.55 *14*	1.50 *38*	3.69 *93,7*	3.27 *83*	4.25 *108*	0.47 *12*	3/8 *10*	0.87 *22*	1.57 *40*	**FYJ 30 KF**	**HE 2306**
1 3/16 *30,163*	1.34 *34*	0.63 *16*	1.69 *43*	4.19 *106,4*	3.62 *92*	4.65 *118*	0.55 *14*	1/2 *12*	0.96 *24,3*	1.70 *43,3*	**FYJ 35 KF**	**HA 2307**
1 1/4 *31,75*	1.42 *36*	0.63 *16*	1.81 *46*	4.56 *115,9*	4.02 *102*	5.12 *130*	0.63 *16*	9/16 *14*	1.06 *27*	1.89 *48*	**FYJ 40 KF**	**HE 2308**
1 7/16 *36,513*	1.50 *38*	0.71 *18*	1.97 *50*	4.69 *119,1*	4.13 *105*	5.39 *137*	0.63 *16*	9/16 *14*	1.12 *28,5*	1.99 *50,5*	**FYJ 45 KF**	**HA 2309**
1 1/2 *38,1*	1.50 *38*	0.71 *18*	1.97 *50*	4.69 *119,1*	4.13 *105*	5.39 *137*	0.63 *16*	9/16 *14*	1.12 *28,5*	1.99 *50,5*	**FYJ 45 KF**	**HE 2309**
1 5/8 *41,275*	1.57 *40*	0.71 *18*	2.17 *55*	4.94 *125,4*	4.37 *111*	5.63 *143*	0.63 *16*	9/16 *14*	1.20 *30,5*	2.07 *52,5*	**FYJ 50 KF**	**HS 2310**
1 11/16 *42,863*	1.57 *40*	0.71 *18*	2.17 *55*	4.94 *125,4*	4.37 *111*	5.63 *143*	0.63 *16*	9/16 *14*	1.20 *30,5*	2.07 *52,5*	**FYJ 50 KF**	**HA 2310**
1 3/4 *44,45*	1.57 *40*	0.71 *18*	2.17 *55*	4.94 *125,4*	4.37 *111*	5.63 *143*	0.63 *16*	9/16 *14*	1.20 *30,5*	2.07 *52,5*	**FYJ 50 KF**	**HE 2310**
1 15/16 *49,213*	1.69 *43*	0.79 *20*	2.32 *59*	5.94 *150,8*	5.12 *130*	6.38 *162*	0.75 *19*	5/8 *16*	1.28 *32,5*	2.26 *57,5*	**FYJ 55 KF**	**HA 2311**
2 *50,8*	1.69 *43*	0.79 *20*	2.32 *59*	5.94 *150,8*	5.12 *130*	6.38 *162*	0.75 *19*	5/8 *16*	1.28 *32,5*	2.26 *57,5*	**FYJ 55 KF**	**HE 2311 B**
2 1/8 *53,975*	1.89 *48*	0.79 *20*	2.44 *62*	6.37 *161,9*	5.63 *143*	6.89 *175*	0.75 *19*	5/8 *16*	1.35 *34,3*	2.49 *63,3*	**FYJ 60 KF**	**HS 2312**

[1] Bearing unit and adapter sleeve to be ordered separately

Designations Bearing unit without adapter sleeve	Separate components Housing	 Bearing	**Basic load ratings** dynamic C	 static C_0	**Fatigue load limit** P_u	**Limiting** speed	**Mass** Bearing unit + sleeve
–			lbf/*kN*		lbf/*kN*	r/min	lb/*kg*
FYJ 25 KF	FYJ 505	YSA 205-2FK	3 150 *14*	1 760 *7,8*	80 *0,335*	7 000	1.60 *0,73*
FYJ 30 KF	FYJ 506	YSA 206-2FK	4 390 *19,5*	2 520 *11,2*	110 *0,475*	6 300	2.35 *1,05*
FYJ 30 KF	FYJ 506	YSA 206-2FK	4 390 *19,5*	2 520 *11,2*	110 *0,475*	6 300	2.30 *1,05*
FYJ 35 KF	FYJ 507	YSA 207-2FK	5 740 *25,5*	3 440 *15,3*	150 *0,655*	5 300	3.00 *1,35*
FYJ 40 KF	FYJ 508	YSA 208-2FK	6 910 *30,7*	4 280 *19*	180 *0,8*	4 800	3.85 *1,75*
FYJ 45 KF	FYJ 509	YSA 209-2FK	7 470 *33,2*	4 860 *21,6*	210 *0,915*	4 300	4.75 *2,15*
FYJ 45 KF	FYJ 509	YSA 209-2FK	7 470 *33,2*	4 860 *21,6*	210 *0,915*	4 300	4.65 *2,10*
FYJ 50 KF	FYJ 510	YSA 210-2FK	7 900 *35,1*	5 220 *23,2*	220 *0,98*	4 000	6.30 *2,85*
FYJ 50 KF	FYJ 510	YSA 210-2FK	7 900 *35,1*	5 220 *23,2*	220 *0,98*	4 000	6.25 *2,85*
FYJ 50 KF	FYJ 510	YSA 210-2FK	7 900 *35,1*	5 220 *23,2*	220 *0,98*	4 000	6.15 *2,80*
FYJ 55 KF	FYJ 511	YSA 211-2FK	9 810 *43,6*	6 530 *29*	280 *1,25*	3 600	7.95 *3,60*
FYJ 55 KF	FYJ 511	YSA 211-2FK	9 810 *43,6*	6 530 *29*	280 *1,25*	3 600	7.95 *3,60*
FYJ 60 KF	FYJ 512	YSA 212-2FK	11 860 *52,7*	8 100 *36*	340 *1,53*	3 400	10.0 *4,60*

Flanged Y-bearing units with a cast housing with a square flange and an adapter sleeve, inch shafts

d **2 3/16 – 2 3/8** in

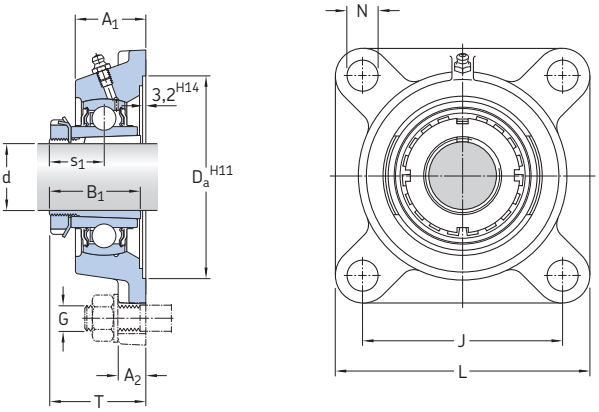

Dimensions											Designations[1]	
											Bearing unit	Adapter sleeve
d	A_1	A_2	B_1	D_a	J	L	N	G	s_1	T		
in/*mm*											–	
2 3/16	1.97	0.79	2.56	6.37	5.87	7.36	0.75	5/8	1.41	2.59	**FYJ 65 KF**	**HA 2313**
55,563	*50*	*20*	*65*	*161,9*	*149*	*187*	*19*	*16*	*35,8*	*65,8*		
2 1/4	1.97	0.79	2.56	6.37	5.87	7.36	0.75	5/8	1.41	2.59	**FYJ 65 KF**	**HE 2313**
57,15	*50*	*20*	*65*	*161,9*	*149*	*187*	*19*	*16*	*35,8*	*65,8*		
2 3/8	1.97	0.79	2.56	6.37	5.87	7.36	0.75	5/8	1.41	2.59	**FYJ 65 KF**	**HS 2313**
60,325	*50*	*20*	*65*	*161,9*	*149*	*187*	*19*	*16*	*35,8*	*65,8*		

[1] Bearing unit and adapter sleeve to be ordered separately

Designations Bearing unit without adapter sleeve	Separate components Housing	Bearing	**Basic load ratings** dynamic C	static C_0	**Fatigue load limit** P_u	**Limiting** speed	**Mass** Bearing unit + sleeve
–			lbf/*kN*		lbf/*kN*	r/min	lb/*kg*
FYJ 65 KF	FYJ 513	YSA 213-2FK	12 870 *57,2*	9 000 *40*	380 *1,7*	3 000	13.5 *6,20*
FYJ 65 KF	FYJ 513	YSA 213-2FK	12 870 *57,2*	9 000 *40*	380 *1,7*	3 000	13.5 *6,10*
FYJ 65 KF	FYJ 513	YSA 213-2FK	12 870 *57,2*	9 000 *40*	380 *1,7*	3 000	13.5 *6,00*

Flanged Y-bearing units with a cast housing with an oval flange and grub screws, metric shafts

d **12 – 50** mm

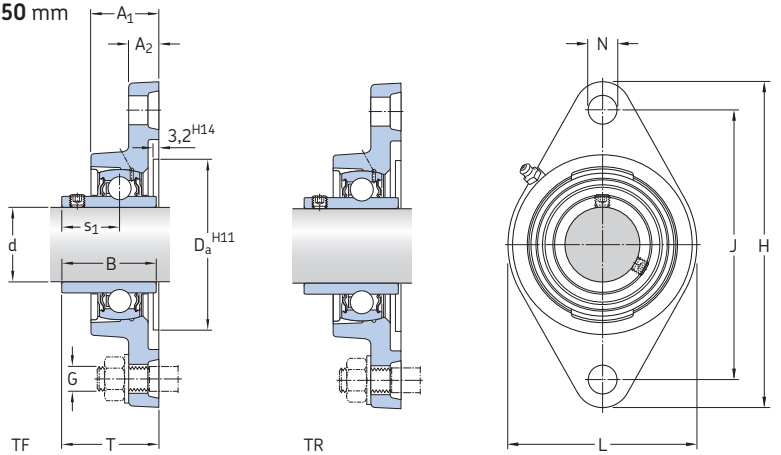

Dimensions												Basic load ratings		Fatigue load limit	Limiting speed	Designation
												dynamic	static		with shaft tolerance	Bearing unit
d	A_1	A_2	B	D_a	H	J	L	N	G	s_1	T	C	C_0	P_u	h6	
mm												kN		kN	r/min	–
12	26	11	27,4	50,8	98,5	76,5	57	11,5	10	15,9	32,9	9,56	4,75	0,2	9 500	**FYTB 12 TF**
15	26	11	27,4	50,8	98,5	76,5	57	11,5	10	15,9	32,9	9,56	4,75	0,2	9 500	**FYTB 15 TF**
17	26	11	27,4	50,8	98,5	76,5	57	11,5	10	15,9	32,9	9,56	4,75	0,2	9 500	**FYTB 17 TF**
20	29,5	11	31	50,8	112	90	60,5	11,5	10	18,3	37,3	12,7	6,55	0,28	8 500	**FYTB 20 TF**
	25,5	12	31	50,8	112	90	60	12	10	18,3	33,3	12,7	6,55	0,28	8 500	**FYTJ 20 TF**
	29,5	11	31	50,8	112	90	60,5	11,5	10	18,3	37,3	12,7	6,55	0,28	5 000	**FYTB 20 TR**
25	30	12	34,1	63,5	124	99	70	11,5	10	19,8	38,8	14	7,8	0,335	7 000	**FYTB 25 TF**
	27	14	34,1	63,5	130	99	68	16	14	19,8	35,8	14	7,8	0,335	7 000	**FYTJ 25 TF**
	30	12	34,1	63,5	124	99	70	11,5	10	19,8	38,8	14	7,8	0,335	4 300	**FYTB 25 TR**
30	32,5	13	38,1	76,2	141,5	116,5	83	11,5	10	22,2	42,2	19,5	11,2	0,475	6 300	**FYTB 30 TF**
	30,5	13,5	38,1	76,2	148	117	80	16	14	22,2	40,2	19,5	11,2	0,475	6 300	**FYTJ 30 TF**
	32,5	13	38,1	76,2	141,5	116,5	83	11,5	10	22,2	42,2	19,5	11,2	0,475	3 800	**FYTB 30 TR**
35	34,5	13	42,9	88,9	156	130	96	14	12	25,4	46,4	25,5	15,3	0,655	5 300	**FYTB 35 TF**
	34	16	42,9	88,9	161	130	96	16	14	25,4	44,4	25,5	15,3	0,655	5 300	**FYTJ 35 TF**
	34,5	13	42,9	88,9	156	130	96	14	12	25,4	46,4	25,5	15,3	0,655	3 200	**FYTB 35 TR**
40	38,5	14	49,2	88,9	171,5	143,5	102	14	12	30,2	54,2	30,7	19	0,8	4 800	**FYTB 40 TF**
	36	16	49,2	88,9	175	144	100	16	14	30,2	51,2	30,7	19	0,8	4 800	**FYTJ 40 TF**
	38,5	14	49,2	88,9	171,5	143,5	102	14	12	30,2	54,2	30,7	19	0,8	2 800	**FYTB 40 TR**
45	39	14	49,2	98,4	178,5	148,5	111	16	14	30,2	54,2	33,2	21,6	0,915	4 300	**FYTB 45 TF**
	38	18	49,2	98,4	188	148	108	19	16	30,2	52,2	33,2	21,6	0,915	4 300	**FYTJ 45 TF**
	39	14	49,2	98,4	178,5	148,5	111	16	14	30,2	54,2	33,2	21,6	0,915	2 400	**FYTB 45 TR**
50	43	15	51,6	101,6	189	157	116	18	16	32,6	60,6	35,1	23,2	0,98	4 000	**FYTB 50 TF**
	40	18	51,6	101,6	195	157	115	19	16	32,6	54,6	35,1	23,2	0,98	4 000	**FYTJ 50 TF**
	43	15	51,6	101,6	189	157	116	18	16	32,6	60,6	35,1	23,2	0,98	2 200	**FYTB 50 TR**

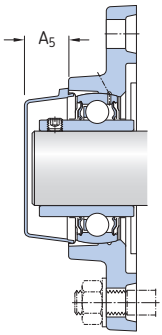

Designations			Mass	Appropriate end cover	
Bearing unit	Separate components		Bearing unit	Designation	Dimension
	Housing	Bearing			A_5
–			kg	–	mm
FYTB 12 TF	FYTB 503 M	YAR 203/12-2F	0,42	–	–
FYTB 15 TF	FYTB 503 M	YAR 203/15-2F	0,40	–	–
FYTB 17 TF	FYTB 503 M	YAR 203-2F	0,39	–	–
FYTB 20 TF	FYTB 504 M	YAR 204-2F	0,50	ECY 204	18,5
FYTJ 20 TF	FYTJ 504	YAR 204-2F	0,43	–	–
FYTB 20 TR	FYTB 504 M	YAR 204-2RF	0,50	ECY 204	18,5
FYTB 25 TF	FYTB 505 M	YAR 205-2F	0,63	ECY 205	18
FYTJ 25 TF	FYTJ 505	YAR 205-2F	0,58	–	–
FYTB 25 TR	FYTB 505 M	YAR 205-2RF	0,63	ECY 205	18
FYTB 30 TF	FYTB 506 M	YAR 206-2F	0,93	ECY 206	20
FYTJ 30 TF	FYTJ 506	YAR 206-2F	0,93	–	–
FYTB 30 TR	FYTB 506 M	YAR 206-2RF	0,93	ECY 206	20
FYTB 35 TF	FYTB 507 M	YAR 207-2F	1,25	ECY 207	22
FYTJ 35 TF	FYTJ 507	YAR 207-2F	1,15	–	–
FYTB 35 TR	FYTB 507 M	YAR 207-2RF	1,25	ECY 207	22
FYTB 40 TF	FYTB 508 M	YAR 208-2F	1,65	ECY 208	23,5
FYTJ 40 TF	FYTJ 508	YAR 208-2F	1,55	–	–
FYTB 40 TR	FYTB 508 M	YAR 208-2RF	1,65	ECY 208	23,5
FYTB 45 TF	FYTB 509 M	YAR 209-2F	1,80	ECY 209	23
FYTJ 45 TF	FYTJ 509	YAR 209-2F	2,20	–	–
FYTB 45 TR	FYTB 509 M	YAR 209-2RF	1,80	ECY 209	23
FYTB 50 TF	FYTB 510 M	YAR 210-2F	2,15	ECY 210	29,5
FYTJ 50 TF	FYTJ 510	YAR 210-2F	3,10	–	–
FYTB 50 TR	FYTB 510 M	YAR 210-2RF	2,15	ECY 210	29,5

Flanged Y-bearing units with a cast housing with an oval flange and grub screws, inch shafts

d **1/2 – 1 1/8** in

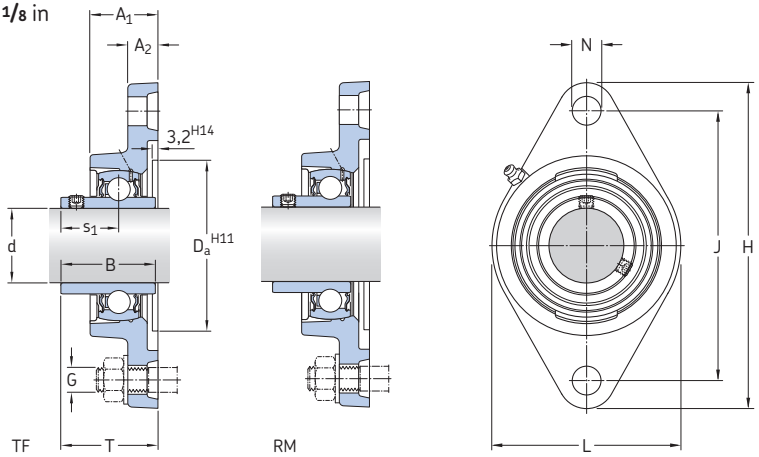

Dimensions											Designation Bearing unit
d	A_1	A_2	B	H	J	L	N	G	s_1	T	
in/*mm*											–
1/2	0.92	0.45	0.89	3.88	3.00	2.13	0.44	3/8	0.63	1.20	**FYT 1/2 RM**
12,7	*23,4*	*11,5*	*22,5*	*98,5*	*76,2*	*54*	*11,1*	*10*	*16*	*30,6*	
	0.92	0.45	1.08	3.88	3.00	2.13	0.44	3/8	0.63	1.20	**FYT 1/2 TF**
	23,4	*11,5*	*27,4*	*98,5*	*76,2*	*54*	*11,1*	*10*	*15,9*	*30,6*	
5/8	0.92	0.45	0.89	3.88	3.00	2.13	0.44	3/8	0.63	1.20	**FYT 5/8 RM**
15,875	*23,4*	*11,5*	*22,5*	*98,5*	*76,2*	*54*	*11,1*	*10*	*16*	*30,6*	
	0.92	0.45	1.08	3.88	3.00	2.13	0.44	3/8	0.63	1.20	**FYT 5/8 TF**
	23,4	*11,5*	*27,4*	*98,5*	*76,2*	*54*	*11,1*	*10*	*15,9*	*30,6*	
3/4	0.97	0.44	1.00	4.41	3.53	2.38	0.44	3/8	0.72	1.28	**FYT 3/4 RM**
19,05	*24,6*	*11,1*	*25,5*	*111,9*	*89,7*	*60,5*	*11,1*	*10*	*18,3*	*32,6*	
	0.97	0.44	1.22	4.41	3.53	2.38	0.44	3/8	0.72	1.28	**FYT 3/4 TF/AH**
	24,6	*11,1*	*31*	*111,9*	*89,7*	*60,5*	*11,1*	*10*	*18,3*	*32,6*	
	1.16	0.43	1.22	4.41	3.54	2.38	0.45	3/8	0.72	1.47	**FYTB 3/4 TF**
	29,5	*11*	*31*	*112*	*90*	*60,5*	*11,5*	*10*	*18,3*	*37,3*	
	1.00	0.47	1.22	4.41	3.54	2.36	0.47	3/8	0.72	1.31	**FYTJ 3/4 TF**
	25,5	*12*	*31*	*112*	*90*	*60*	*12*	*10*	*18,3*	*33,3*	
7/8	1.18	0.47	1.34	4.88	3.89	2.76	0.50	7/16	0.78	1.53	**FYT 7/8 TF**
22,225	*30*	*12*	*34,1*	*124*	*98,8*	*70*	*12,7*	*11*	*19,8*	*38,8*	
15/16	1.18	0.47	1.07	4.88	3.89	2.76	0.50	7/16	0.77	1.53	**FYT 15/16 RM**
23,813	*30*	*12*	*27,2*	*124*	*98,8*	*70*	*12,7*	*11*	*19,5*	*38,8*	
	1.18	0.47	1.34	4.88	3.89	2.76	0.50	7/16	0.78	1.53	**FYT 15/16 TF**
	30	*12*	*34,1*	*124*	*98,8*	*70*	*12,7*	*10*	*19,8*	*38,8*	
1	1.18	0.47	1.07	4.88	3.89	2.76	0.50	7/16	0.77	1.53	**FYT 1. RM**
25,4	*30*	*12*	*27,2*	*124*	*98,8*	*70*	*12,7*	*10*	*19,5*	*38,8*	
	1.18	0.47	1.34	4.88	3.89	2.76	0.50	7/16	0.78	1.53	**FYT 1. TF**
	30	*12*	*34,1*	*124*	*98,8*	*70*	*12,7*	*10*	*19,8*	*38,8*	
	1.18	0.47	1.34	4.88	3.90	2.76	0.45	3/8	0.78	1.53	**FYTB 1. TF**
	30	*12*	*34,1*	*124*	*99*	*70*	*11,5*	*10*	*19,8*	*38,8*	
	1.06	0.55	1.34	5.12	3.90	2.68	0.63	9/16	0.78	1.41	**FYTJ 1. TF**
	27	*14*	*34,1*	*130*	*99*	*68*	*16*	*14*	*19,8*	*35,8*	
1 1/8	1.28	0.51	1.50	5.57	4.60	3.27	0.50	7/16	0.87	1.66	**FYT 1.1/8 TF**
28,575	*32,5*	*13*	*38,1*	*141,5*	*116,9*	*83*	*12,7*	*10*	*22,2*	*42,2*	

Designations Bearing unit	Separate components Housing	Bearing	**Basic load ratings** dynamic C	static C_0	**Fatigue load** limit P_u	**Limiting speed** with shaft tolerance h6	**Mass** Bearing unit
–			lbs/*kN*		lbs/*kN*	r/min	lb/*kg*
FYT 1/2 RM	FYT 503 U	YAT 203-008	2 150 *9,56*	1 070 *4,75*	50 *0,2*	9 500	0.68 *0,31*
FYT 1/2 TF	FYT 503 U	YAR 203-008-2F	2 150 *9,56*	1 070 *4,75*	50 *0,2*	9 500	0.73 *0,33*
FYT 5/8 RM	FYT 503 U	YAT 203-010	2 150 *9,56*	1 070 *4,75*	50 *0,2*	9 500	0.66 *0,30*
FYT 5/8 TF	FYT 503 U	YAR 203-010-2F	2 150 *9,56*	1 070 *4,75*	50 *0,2*	9 500	0.68 *0,31*
FYT 3/4 RM	FYT 504 U	YAT 204-012	2 860 *12,7*	1 470 *6,55*	60 *0,28*	8 500	1.05 *0,47*
FYT 3/4 TF/AH	FYT 504 U/AH	YAR 204-012-2F/AH	2 860 *12,7*	1 470 *6,55*	60 *0,28*	8 500	1.10 *0,50*
FYTB 3/4 TF	FYTB 504 M	YAR 204-012-2F	2 860 *12,7*	1 470 *6,55*	60 *0,28*	8 500	1.10 *0,50*
FYTJ 3/4 TF	FYTJ 504	YAR 204-012-2F	2 860 *12,7*	1 470 *6,55*	60 *0,28*	8 500	0.95 *0,43*
FYT 7/8 TF	FYT 505 U	YAR 205-014-2F	3 150 *14*	1 760 *7,8*	80 *0,335*	7 000	1.45 *0,66*
FYT 15/16 RM	FYT 505 U	YAT 205-015	3 150 *14*	1 760 *7,8*	80 *0,335*	7 000	1.35 *0,61*
FYT 15/16 TF	FYT 505 U	YAR 205-015-2F	3 150 *14*	1 760 *7,8*	80 *0,335*	7 000	1.40 *0,64*
FYT 1. RM	FYT 505 U	YAT 205-100	3 150 *14*	1 760 *7,8*	80 *0,335*	7 000	1.30 *0,60*
FYT 1. TF	FYT 505 U	YAR 205-100-2F	3 150 *14*	1 760 *7,8*	80 *0,335*	7 000	1.30 *0,60*
FYTB 1. TF	FYTB 505 M	YAR 205-100-2F	3 150 *14*	1 760 *7,8*	80 *0,335*	7 000	1.40 *0,63*
FYTJ 1. TF	FYTJ 505	YAR 205-100-2F	3 150 *14*	1 760 *7,8*	80 *0,335*	7 000	1.30 *0,58*
FYT 1.1/8 TF	FYT 506 U	YAR 206-102-2F	4 390 *19,5*	2 520 *11,2*	110 *0,475*	6 300	2.10 *0,95*

Flanged Y-bearing units with a cast housing with an oval flange and grub screws, inch shafts

d **1 3/16 – 1 11/16** in

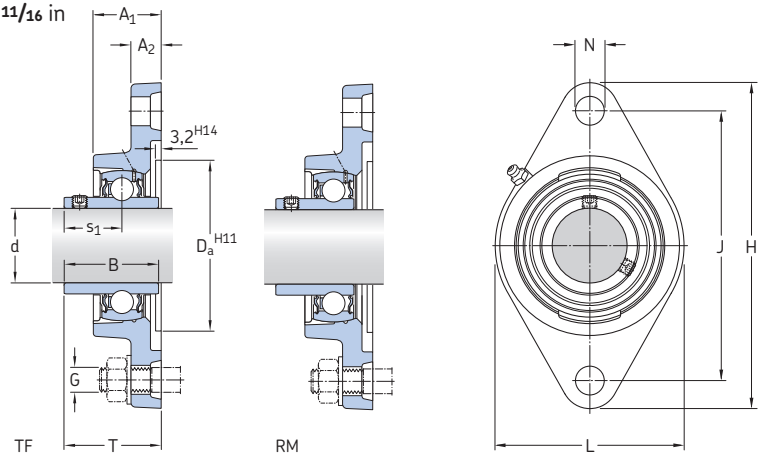

Dimensions											Designation Bearing unit
d	A_1	A_2	B	H	J	L	N	G	s_1	T	
in/*mm*											–
1 3/16	1.28	0.51	1.22	5.57	4.60	3.27	0.50	7/16	0.87	1.66	**FYT 1.3/16 RM**
30,163	*32,5*	*13*	*31*	*141,5*	*116,9*	*83*	*12,7*	*10*	*22*	*42,2*	
	1.28	0.51	1.50	5.57	4.60	3.27	0.50	7/16	0.87	1.66	**FYT 1.3/16 TF**
	32,5	*13*	*38,1*	*141,5*	*116,9*	*83*	*12,7*	*10*	*22,2*	*42,2*	
1 1/4	1.36	0.51	1.38	6.14	5.13	3.78	0.56	1/2	1.00	1.83	**FYT 1.1/4 RM**
31,75	*34,5*	*13*	*35*	*156*	*130,2*	*96*	*14,3*	*12*	*25,5*	*46,4*	
	1.36	0.51	1.69	6.14	5.12	3.78	0.55	1/2	1.00	1.83	**FYTB 1.1/4 TF**
	34,5	*13*	*42,9*	*156*	*130*	*96*	*14*	*12*	*25,4*	*46,4*	
	1.34	0.63	1.69	6.34	5.12	3.78	0.63	9/16	1.00	1.75	**FYTJ 1.1/4 TF**
	34	*16*	*42,9*	*161*	*130*	*96*	*16*	*14*	*25,4*	*44,4*	
1 5/16	1.36	0.51	1.69	6.14	5.13	3.78	0.56	1/2	1.00	1.83	**FYT 1.5/16 TF**
33,338	*34,5*	*13*	*42,9*	*156*	*130,2*	*96*	*14,3*	*12*	*25,4*	*46,4*	
1 3/8	1.36	0.51	1.38	6.14	5.13	3.78	0.56	1/2	1.00	1.83	**FYT 1.3/8 RM**
34,925	*34,5*	*13*	*35*	*156*	*130,2*	*96*	*14,3*	*12*	*25,5*	*46,4*	
	1.36	0.51	1.69	6.14	5.13	3.78	0.56	1/2	1.00	1.83	**FYT 1.3/8 TF**
	34,5	*13*	*42,9*	*156*	*130,2*	*96*	*14,3*	*12*	*25,4*	*46,4*	
1 7/16	1.36	0.51	1.38	6.14	5.13	3.78	0.56	1/2	1.00	1.83	**FYT 1.7/16 RM**
36,513	*34,5*	*13*	*35*	*156*	*130,2*	*96*	*14,3*	*12*	*25,5*	*46,4*	
	1.36	0.51	1.69	6.14	5.13	3.78	0.56	1/2	1.00	1.83	**FYT 1.7/16 TF**
	34,5	*13*	*42,9*	*156*	*130,2*	*96*	*14,3*	*12*	*25,4*	*46,4*	
1 1/2	1.52	0.55	1.57	6.75	5.66	4.02	0.56	1/2	1.12	2.07	**FYT 1.1/2 RM**
38,1	*38,5*	*14*	*40*	*171,5*	*143,7*	*102*	*14,3*	*12*	*28,5*	*52,6*	
	1.52	0.55	1.94	6.75	5.66	4.02	0.56	1/2	1.19	2.13	**FYT 1.1/2 TF**
	38,5	*14*	*49,2*	*171,5*	*143,7*	*102*	*14,3*	*12*	*30,2*	*54,2*	
	1.52	0.55	1.94	6.75	5.65	4.02	0.55	1/2	1.19	2.13	**FYTB 1.1/2 TF**
	38,5	*14*	*49,2*	*171,5*	*143,5*	*102*	*14*	*12*	*30,2*	*54,2*	
	1.42	0.63	1.94	6.89	5.67	3.94	0.63	9/16	1.19	2.02	**FYTJ 1.1/2 TF**
	36	*16*	*49,2*	*175*	*144*	*100*	*16*	*14*	*30,2*	*51,2*	
1 5/8	1.54	0.55	1.94	7.03	5.84	4.37	0.63	9/16	1.19	2.13	**FYT 1.5/8 TF**
41,275	*39*	*14*	*49,2*	*178,5*	*148,4*	*111*	*15,9*	*14*	*30,2*	*54,2*	
1 11/16	1.54	0.55	1.63	7.03	5.84	4.37	0.63	9/16	1.20	2.13	**FYT 1.11/16 RM**
42,863	*39*	*14*	*41,5*	*178,5*	*148,4*	*111*	*15,9*	*14*	*30,5*	*54,2*	
	1.54	0.55	1.94	7.03	5.84	4.37	0.63	9/16	1.19	2.13	**FYT 1.11/16 TF**
	39	*14*	*49,2*	*178,5*	*148,4*	*111*	*15,9*	*14*	*30,2*	*54,2*	

Designations Bearing unit	Separate components Housing	 Bearing	**Basic load ratings** dynamic C	 static C_0	**Fatigue load** limit P_u	**Limiting speed** with shaft tolerance h6	**Mass** Bearing unit
–			lbs/*kN*		lbs/*kN*	r/min	lb/*kg*
FYT 1.3/16 RM	FYT 506 U	YAT 206-103	4 390 *19,5*	2 520 *11,2*	110 *0,475*	6 300	1.95 *0,88*
FYT 1.3/16 TF	FYT 506 U	YAR 206-103-2F	4 390 *19,5*	2 520 *11,2*	110 *0,475*	6 300	2.05 *0,93*
FYT 1.1/4 RM	FYT 507 U	YAT 207-104	5 740 *25,5*	3 440 *15,3*	150 *0,655*	5 300	2.65 *1,21*
FYTB 1.1/4 TF	FYTB 507 U	YAR 207-104-2F	5 740 *25,5*	3 440 *15,3*	150 *0,655*	5 300	3.10 *1,40*
FYTJ 1.1/4 TF	FYTJ 507 U	YAR 207-104-2F	5 740 *25,5*	3 440 *15,3*	150 *0,655*	5 300	2.85 *1,30*
FYT 1.5/16 TF	FYT 507 U	YAR 207-105-2F	5 740 *25,5*	3 440 *15,3*	150 *0,655*	5 300	2.85 *1,30*
FYT 1.3/8 RM	FYT 507 U	YAT 207-106	5 740 *25,5*	3 440 *15,3*	150 *0,655*	5 300	2.60 *1,15*
FYT 1.3/8 TF	FYT 507 U	YAR 207-106-2F	5 740 *25,5*	3 440 *15,3*	150 *0,655*	5 300	2.80 *1,27*
FYT 1.7/16 RM	FYT 507 U	YAT 207-107	5 740 *25,5*	3 440 *15,3*	150 *0,655*	5 300	2.50 *1,14*
FYT 1.7/16 TF	FYT 507 U	YAR 207-107-2F	5 740 *25,5*	3 440 *15,3*	150 *0,655*	5 300	2.75 *1,25*
FYT 1.1/2 RM	FYT 508 U	YAT 208-108	6 910 *30,7*	4 280 *19*	180 *0,8*	4 800	3.55 *1,60*
FYT 1.1/2 TF	FYT 508 U	YAR 208-108-2F	6 910 *30,7*	4 280 *19*	180 *0,8*	4 800	3.60 *1,70*
FYTB 1.1/2 TF	FYTB 508 M	YAR 208-108-2F	6 910 *30,7*	4 280 *19*	180 *0,8*	4 800	3.75 *1,70*
FYTJ 1.1/2 TF	FYTJ 508	YAR 208-108-2F	6 910 *30,7*	4 280 *19*	180 *0,8*	4 800	3.55 *1,60*
FYT 1.5/8 TF	FYT 509 U	YAR 209-110-2F	7 470 *33,2*	4 860 *21,6*	210 *0,915*	4 300	4.20 *1,90*
FYT 1.11/16 RM	FYT 509 U	YAT 209-111	7 470 *33,2*	4 860 *21,6*	210 *0,915*	4 300	3.85 *1,74*
FYT 1.11/16 TF	FYT 509 U	YAR 209-111-2F	7 470 *33,2*	4 860 *21,6*	210 *0,915*	4 300	4.10 *1,86*

Flanged Y-bearing units with a cast housing with an oval flange and grub screws, inch shafts

d **1 3/4 – 2 3/16** in

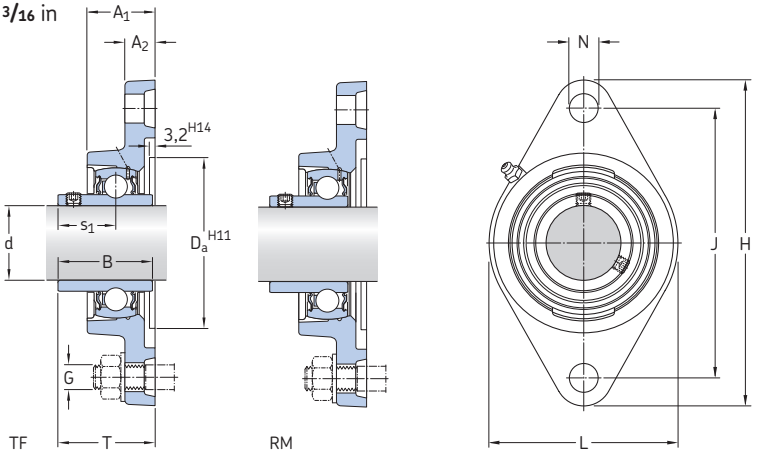

Dimensions											Designation Bearing unit
d	A_1	A_2	B	H	J	L	N	G	s_1	T	
in/*mm*											–
1 3/4	1.54	0.55	1.63	7.03	5.84	4.37	0.63	9/16	1.20	2.13	**FYT 1.3/4 RM**
44,45	*39*	*14*	*41,5*	*178,5*	*148,4*	*111*	*15,9*	*14*	*30,5*	*54,2*	
	1.54	0.55	1.94	7.03	5.84	4.37	0.63	9/16	1.19	2.13	**FYT 1.3/4 TF**
	39	*14*	*49,2*	*178,5*	*148,4*	*111*	*15,9*	*14*	*30,2*	*54,2*	
	1.54	0.55	1.94	7.03	5.85	4.37	0.63	9/16	1.19	2.13	**FYTB 1.3/4 TF**
	39	*14*	*49,2*	*178,5*	*148,5*	*111*	*16*	*14*	*30,2*	*54,2*	
	1.50	0.71	1.94	7.40	5.83	4.25	0.75	5/8	1.19	2.06	**FYTJ 1.3/4 TF**
	38	*18*	*49,2*	*188*	*148*	*108*	*19*	*16*	*30,2*	*52,2*	
1 15/16	1.69	0.59	1.69	7.44	6.19	4.57	0.63	9/16	1.26	2.37	**FYT 1.15/16 RM**
49,213	*43*	*15*	*43*	*189*	*157,2*	*116*	*15,9*	*14*	*32*	*60,1*	
	1.69	0.59	2.03	7.44	6.19	4.57	0.63	9/16	1.28	2.39	**FYT 1.15/16 TF**
	43	*15*	*51,6*	*189*	*157,2*	*116*	*15,9*	*14*	*32,6*	*60,6*	
2	1.88	0.81	1.77	8.50	7.25	5.00	0.75	5/8	1.28	2.45	**FYT 2. RM**
50,8	*47,6*	*20,6*	*45*	*216*	*184,2*	*127*	*19*	*16*	*32,5*	*62,3*	
	1.88	0.81	2.19	8.50	7.25	5.00	0.75	5/8	1.32	2.47	**FYT 2. TF**
	47,6	*20,6*	*55,6*	*216*	*184,2*	*127*	*19*	*16*	*33,4*	*62,8*	
2 3/16	1.88	0.81	1.77	8.50	7.25	5.00	0.75	5/8	1.28	2.45	**FYT 2.3/16 RM**
55,563	*47,6*	*20,6*	*45*	*216*	*184,2*	*127*	*19*	*16*	*32,5*	*62,3*	
	1.88	0.81	2.19	8.50	7.25	5.00	0.75	5/8	1.32	2.47	**FYT 2.3/16 TF**
	47,6	*20,6*	*55,6*	*216*	*184,2*	*127*	*19*	*16*	*33,4*	*62,8*	

Designations Bearing unit	Separate components Housing	Bearing	**Basic load ratings** dynamic C	static C_0	**Fatigue load** limit P_u	**Limiting speed** with shaft tolerance h6	**Mass** Bearing unit
–			lbs/*kN*		lbs/*kN*	r/min	lb/*kg*
FYT 1.3/4 RM	FYT 509 U	YAT 209-112	7 470 *33,2*	4 860 *21,6*	210 *0,915*	4 300	3.75 *1,70*
FYT 1.3/4 TF	FYT 509 U	YAR 209-112-2F	7 470 *33,2*	4 860 *21,6*	210 *0,915*	4 300	3.95 *1,80*
FYTB 1.3/4 TF	FYTB 509 M	YAR 209-112-2F	7 470 *33,2*	4 860 *21,6*	210 *0,915*	4 300	3.95 *1,80*
FYTJ 1.3/4 TF	FYTJ 509	YAR 209-112-2F	7 470 *33,2*	4 860 *21,6*	210 *0,915*	4 300	4.85 *2,20*
FYT 1.15/16 RM	FYT 510 U	YAT 210-115	7 900 *35,1*	5 220 *23,2*	220 *0,98*	4 000	4.65 *2,10*
FYT 1.15/16 TF	FYT 510 U	YAR 210-115-2F	7 900 *35,1*	5 220 *23,2*	220 *0,98*	4 000	4.95 *2,25*
FYT 2. RM	FYT 511 U	YAT 211-200	9 810 *43,6*	6 530 *29*	280 *1,25*	3 600	7.30 *3,30*
FYT 2. TF	FYT 511 U	YAR 211-200-2F	9 810 *43,6*	6 530 *29*	280 *1,25*	3 600	7.60 *3,45*
FYT 2.3/16 RM	FYT 511 U	YAT 211-203	9 810 *43,6*	6 530 *29*	280 *1,25*	3 600	6.90 *3,10*
FYT 2.3/16 TF	FYT 511 U	YAR 211-203-2F	9 810 *43,6*	6 530 *29*	280 *1,25*	3 600	7.20 *3,25*

Flanged Y-bearing units with a cast housing with an oval flange and an eccentric locking collar, metric shafts

d **15 – 50** mm

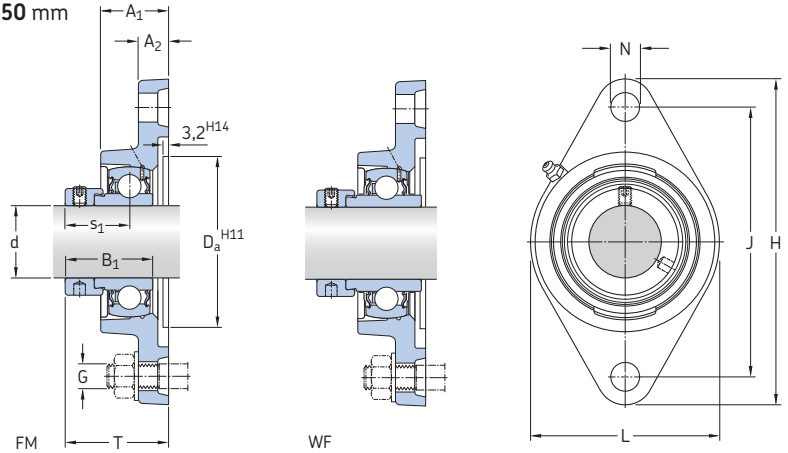

Dimensions												Basic load ratings dynamic	static	Fatigue load limit	Limiting speed with shaft tolerance h6	Designation Bearing unit
d	A_1	A_2	B_1	D_a	H	J	L	N	G	s_1	T	C	C_0	P_u		
mm												kN		kN	r/min	–
15	26	11	28,6	50,8	98,5	76,5	57	11,5	10	22,1	39,1	9,56	4,75	0,2	9 500	**FYTB 15 FM**
17	26	11	28,6	50,8	98,5	76,5	57	11,5	10	22,1	39,1	9,56	4,75	0,2	9 500	**FYTB 17 FM**
20	29,5	11	31	50,8	112	90	60,5	11,5	10	23,5	42,5	12,7	6,55	0,28	8 500	**FYTB 20 FM**
	29,5	11	43,7	50,8	112	90	60,5	11,5	10	26,6	45,6	12,7	6,55	0,28	8 500	**FYTB 20 WF**
25	30	12	31	63,5	124	99	70	11,5	10	23,5	42,5	14	7,8	0,335	7 000	**FYTB 25 FM**
	30	12	44,4	63,5	124	99	70	11,5	10	26,9	45,9	14	7,8	0,335	7 000	**FYTB 25 WF**
30	32,5	13	35,7	76,2	141,5	116,5	83	11,5	10	26,7	46,7	19,5	11,2	0,475	6 300	**FYTB 30 FM**
	32,5	13	48,4	76,2	141,5	116,5	83	11,5	10	30,1	50,1	19,5	11,2	0,475	6 300	**FYTB 30 WF**
35	34,5	13	38,9	88,9	156	130	96	14	12	29,4	50,4	25,5	15,3	0,655	5 300	**FYTB 35 FM**
	34,5	13	51,1	88,9	156	130	96	14	12	32,3	53,3	25,5	15,3	0,655	5 300	**FYTB 35 WF**
40	38,5	14	43,7	88,9	171,5	143,5	102	14	12	32,7	56,7	30,7	19	0,8	4 800	**FYTB 40 FM**
	38,5	14	56,3	88,9	171,5	143,5	102	14	12	34,9	58,9	30,7	19	0,8	4 800	**FYTB 40 WF**
45	39	14	43,7	98,4	178,5	148,5	111	16	14	32,7	56,7	33,2	21,6	0,915	4 300	**FYTB 45 FM**
	39	14	56,3	98,4	178,5	148,5	111	16	14	34,9	58,9	33,2	21,6	0,915	4 300	**FYTB 45 WF**
50	43	15	43,7	101,6	189	157	116	18	16	32,7	60,7	35,1	23,2	0,98	4 000	**FYTB 50 FM**
	43	15	62,7	101,6	189	157	116	18	16	38,1	66,1	35,1	23,2	0,98	4 000	**FYTB 50 WF**

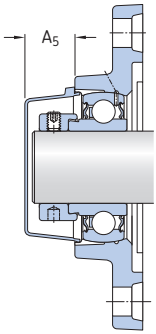

Designations Bearing unit	Separate components Housing	Bearing	**Mass** Bearing unit	**Appropriate end cover** Designation	Dimension A_5
–			kg	–	mm
FYTB 15 FM	FYTB 503 M	YET 203/15	0,42	–	–
FYTB 17 FM	FYTB 503 M	YET 203	0,41	–	–
FYTB 20 FM	FYTB 504 M	YET 204	0,52	ECY 204	18,5
FYTB 20 WF	FYTB 504 M	YEL 204-2F	0,55	ECY 204	18,5
FYTB 25 FM	FYTB 505 M	YET 205	0,64	ECY 205	18
FYTB 25 WF	FYTB 505 M	YEL 205-2F	0,69	ECY 205	18
FYTB 30 FM	FYTB 506 M	YET 206	0,95	ECY 206	20
FYTB 30 WF	FYTB 506 M	YEL 206-2F	1,00	ECY 206	20
FYTB 35 FM	FYTB 507 M	YET 207	1,30	ECY 207	22
FYTB 35 WF	FYTB 507 M	YEL 207-2F	1,40	ECY 207	22
FYTB 40 FM	FYTB 508 M	YET 208	1,70	ECY 208	23,5
FYTB 40 WF	FYTB 508 M	YEL 208-2F	1,80	ECY 208	23,5
FYTB 45 FM	FYTB 509 M	YET 209	1,85	ECY 209	23
FYTB 45 WF	FYTB 509 M	YEL 209-2F	1,95	ECY 209	23
FYTB 50 FM	FYTB 510 M	YET 210	2,20	ECY 210	29,5
FYTB 50 WF	FYTB 510 M	YEL 210-2F	2,35	ECY 210	29,5

Flanged Y-bearing units with a cast housing with an oval flange and an eccentric locking collar, inch shafts

d **1/2 – 1 15/16** in

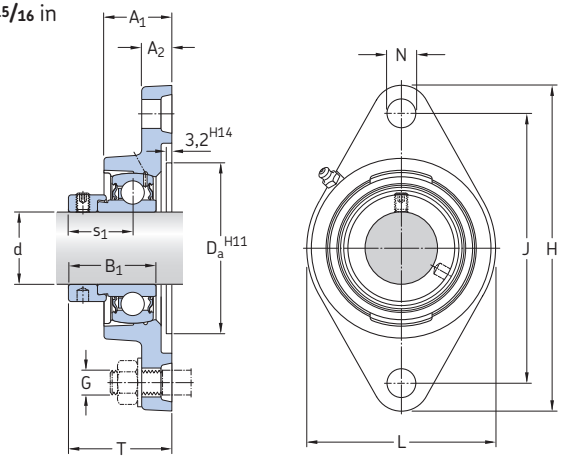

Dimensions											Designation Bearing unit
d	A_1	A_2	B_1	H	J	L	N	G	s_1	T	
in/*mm*											–
1/2 *12,7*	0.92 *23,4*	0.45 *11,5*	1.13 *26,6*	3.88 *98,5*	3.00 *76,2*	2.13 *54*	0.44 *11,1*	3/8 *10*	0.87 *22,1*	1.45 *36,8*	**FYT 1/2 FM**
5/8 *15,875*	0.92 *23,4*	0.45 *11,5*	1.13 *28,6*	3.88 *98,5*	3.00 *76,2*	2.13 *54*	0.44 *11,1*	3/8 *10*	0.87 *22,1*	1.45 *36,8*	**FYT 5/8 FM**
3/4 *19,05*	0.97 *24,6*	0.44 *11,1*	1.22 *31*	4.41 *112*	3.53 *89,7*	2.38 *60,3*	0.44 *11,1*	3/8 *10*	0.93 *23,5*	1.49 *37,8*	**FYT 3/4 FM**
7/8 *22,225*	1.18 *30*	0.47 *12*	1.22 *31*	4.88 *124*	3.89 *98,8*	2.76 *70*	0.50 *12,7*	7/16 *10*	0.93 *23,5*	1.67 *42,5*	**FYT 7/8 FM**
15/16 *23,813*	1.18 *30*	0.47 *12*	1.22 *31*	4.88 *124*	3.89 *98,8*	2.76 *70*	0.50 *12,7*	7/16 *10*	0.93 *23,5*	1.67 *42,5*	**FYT 15/16 FM**
1 *25,4*	1.18 *30*	0.47 *12*	1.22 *31*	4.88 *124*	3.89 *98,8*	2.76 *70*	0.50 *12,7*	7/16 *10*	0.93 *23,5*	1.67 *42,5*	**FYT 1. FM**
1 1/8 *28,575*	1.28 *32,5*	0.51 *13*	1.41 *35,7*	5.57 *141,5*	4.59 *116,9*	3.27 *83*	0.50 *12,7*	7/16 *10*	1.05 *26,7*	1.84 *46,7*	**FYT 1.1/8 FM**
1 3/16 *30,163*	1.28 *32,5*	0.51 *13*	1.41 *35,7*	5.57 *141,5*	4.59 *116,9*	3.27 *83*	0.50 *12,7*	7/16 *10*	1.05 *26,7*	1.84 *46,7*	**FYT 1.3/16 FM**
1 1/4 *31,75*	1.36 *34,5*	0.51 *13*	1.53 *38,9*	6.14 *156*	5.13 *130,2*	3.78 *96*	0.56 *14,3*	1/2 *12*	1.16 *29,4*	1.98 *50,4*	**FYT 1.1/4 FM**
1 3/8 *34,925*	1.36 *34,5*	0.51 *13*	1.53 *38,9*	6.14 *156*	5.13 *130,2*	3.78 *96*	0.56 *14,3*	1/2 *12*	1.16 *29,4*	1.98 *50,4*	**FYT 1.3/8 FM**
1 7/16 *36,513*	1.36 *34,5*	0.51 *13*	1.53 *38,9*	6.14 *156*	5.13 *130,2*	3.78 *96*	0.56 *14,3*	1/2 *12*	1.16 *29,4*	1.98 *50,4*	**FYT 1.7/16 FM**
1 1/2 *38,1*	1.52 *38,5*	0.55 *14*	1.72 *43,7*	6.75 *171,5*	5.66 *143,7*	4.02 *102*	0.56 *14,3*	1/2 *12*	1.29 *32,7*	2.24 *56,5*	**FYT 1.1/2 FM**
1 3/4 *44,45*	1.54 *39*	0.55 *14*	1.72 *43,7*	7.03 *178,5*	5.84 *148,4*	4.37 *111*	0.63 *15,9*	9/16 *14*	1.29 *32,7*	2.23 *56,7*	**FYT 1.3/4 FM**
1 15/16 *49,213*	1.69 *43*	0.59 *15*	1.72 *43,7*	7.44 *189*	6.19 *157,2*	4.57 *116*	0.63 *15,9*	9/16 *14*	1.29 *32,7*	2.39 *60,7*	**FYT 1.15/16 FM**

Designations Bearing unit	Separate components Housing	 Bearing	**Basic load ratings** dynamic C	 static C_0	**Fatigue load limit** P_u	**Limiting speed** with shaft tolerance h6	**Mass** Bearing unit
–			lbf/*kN*		lbf/*kN*	r/min	lb/*kg*
FYT 1/2 FM	FYT 503 U	YET 203-008	2 150 *9,56*	1 070 *4,75*	50 *0,2*	9 500	0.77 *0,35*
FYT 5/8 FM	FYT 503 U	YET 203-010	2 150 *9,56*	1 070 *4,75*	50 *0,2*	9 500	0.75 *0,34*
FYT 3/4 FM	FYT 504 U	YET 204-012	2 860 *12,7*	1 470 *6,55*	60 *0,28*	8 500	1.15 *0,53*
FYT 7/8 FM	FYT 505 U	YET 205-014	3 150 *14*	1 760 *7,8*	80 *0,335*	7 000	1.45 *0,67*
FYT 15/16 FM	FYT 505 U	YET 205-015	3 150 *14*	1 760 *7,8*	80 *0,335*	7 000	1.45 *0,66*
FYT 1. FM	FYT 505 U	YET 205-100	3 150 *14*	1 760 *7,8*	80 *0,335*	7 000	1.40 *0,64*
FYT 1.1/8 FM	FYT 506 U	YET 206-102	4 390 *19,5*	2 520 *11,2*	110 *0,475*	6 300	2.15 *0,98*
FYT 1.3/16 FM	FYT 506 U	YET 206-103	4 390 *19,5*	2 520 *11,2*	110 *0,475*	6 300	2.15 *0,97*
FYT 1.1/4 FM	FYT 507 U	YET 207-104	5 740 *25,5*	3 440 *15,3*	150 *0,655*	5 300	3.10 *1,40*
FYT 1.3/8 FM	FYT 507 U	YET 207-106	5 740 *25,5*	3 440 *15,3*	150 *0,655*	5 300	2.95 *1,35*
FYT 1.7/16 FM	FYT 507 U	YET 207-107	5 740 *25,5*	3 440 *15,3*	150 *0,655*	5 300	2.90 *1,30*
FYT 1.1/2 FM	FYT 508 U	YET 208-108	6 910 *30,7*	4 280 *19*	180 *0,8*	4 800	3.80 *1,75*
FYT 1.3/4 FM	FYT 509 U	YET 209-112	7 470 *33,2*	4 860 *21,6*	210 *0,915*	4 300	4.10 *1,85*
FYT 1.15/16 FM	FYT 510 U	YET 210-115	7 900 *35,1*	5 220 *23,2*	220 *0,98*	4 000	5.05 *2.30*

Flanged Y-bearing units with a cast housing with an oval flange and an eccentric locking collar, inch shafts

d **2 – 2 3/16** in

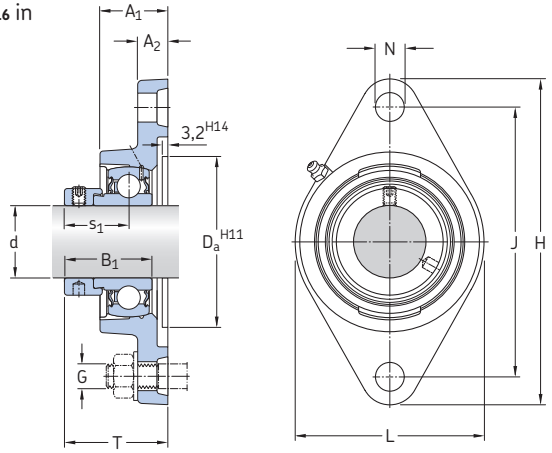

Dimensions											Designation Bearing unit
d	A_1	A_2	B_1	H	J	L	N	G	s_1	T	
in/*mm*											–
2 *50,8*	1.88 *47,6*	0.81 *20,6*	1.91 *48,4*	8.50 *216*	7.25 *184,2*	5.00 *127*	0.75 *19,0*	5/8 *16*	1.43 *36,4*	2.59 *65,8*	**FYT 2. FM**
2 3/16 *55,563*	1.88 *47,6*	0.81 *20,6*	1.91 *48,4*	8.50 *216*	7.25 *184,2*	5.00 *127*	0.75 *19,0*	5/8 *16*	1.43 *36,4*	2.59 *65,8*	**FYT 2.3/16 FM**

Designations Bearing unit	Separate components Housing	 Bearing	**Basic load ratings** dynamic C	 static C_0	**Fatigue load limit** P_u	**Limiting speed** with shaft tolerance h6	**Mass** Bearing unit
–			lbf/*kN*		lbf/*kN*	r/min	lb/*kg*
FYT 2. FM	FYT 511 U	YET 211-200	9 810 *43,6*	6 530 *29*	280 *1,25*	3 600	7.60 *3,45*
FYT 2.3/16 FM	FYT 511 U	YET 211-203	9 810 *43,6*	6 530 *29*	280 *1,25*	3 600	7.35 *3,35*

Flanged Y-bearing units with a cast housing with an oval flange and an adapter sleeve, metric shafts

d **20 – 45** mm

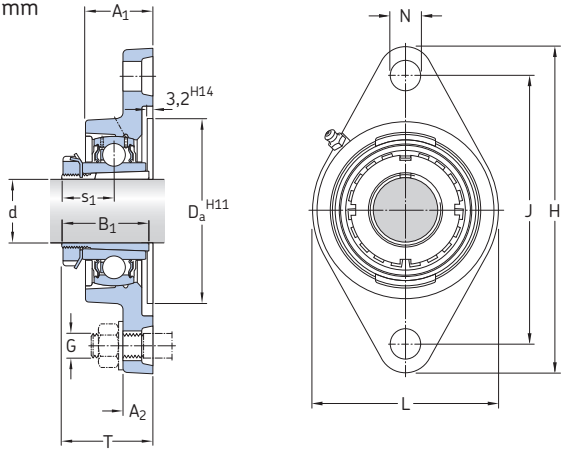

Dimensions												Basic load ratings dynamic	static	Fatigue load limit	Designations[1] Bearing unit	Adapter sleeve
d	A_1	A_2	B_1	D_a	H	J	L	N	G	s_1	T	C	C_0	P_u		
mm												kN		kN	–	
20	27	14	35	63,5	130	99	68	16	14	20	36	14	7,8	0,335	**FYTJ 25 KF**	**H 2305**
25	30,5	13,5	38	76,2	148	117	80	16	14	22	40	19,5	11,2	0,475	**FYTJ 30 KF**	**H 2306**
30	34	16	43	88,9	161	130	96	16	14	24,3	43,3	25,5	15,3	0,655	**FYTJ 35 KF**	**H 2307**
35	36	16	46	88,9	175	144	100	16	14	27	48	30,7	19	0,8	**FYTJ 40 KF**	**H 2308**
40	38	18	50	98,4	188	148	108	19	16	28,5	50,5	33,2	21,6	0,915	**FYTJ 45 KF**	**H 2309**
45	40	18	55	101,6	195	157	115	19	16	30,5	52,5	35,1	23,2	0,98	**FYTJ 50 KF**	**H 2310**

[1] Bearing unit and adapter sleeve to be ordered separately

Designations Bearing unit without adapter sleeve	Separate components of the bearing unit Housing	Bearing	**Limiting speed**	**Mass** Bearing unit + sleeve
–			r/min	kg
FYTJ 25 KF	FYTJ 505	YSA 205-2FK	7 000	0,72
FYTJ 30 KF	FYTJ 506	YSA 206-2FK	6 300	0,83
FYTJ 35 KF	FYTJ 507	YSA 207-2FK	5 300	1,30
FYTJ 40 KF	FYTJ 508	YSA 208-2FK	4 800	1,65
FYTJ 45 KF	FYTJ 509	YSA 209-2FK	4 300	2,20
FYTJ 50 KF	FYTJ 510	YSA 210-2FK	4 000	2,55

Flanged Y-bearing units with a cast housing with an oval flange and an adapter sleeve, inch shafts

d **3/4 – 1 3/4** in

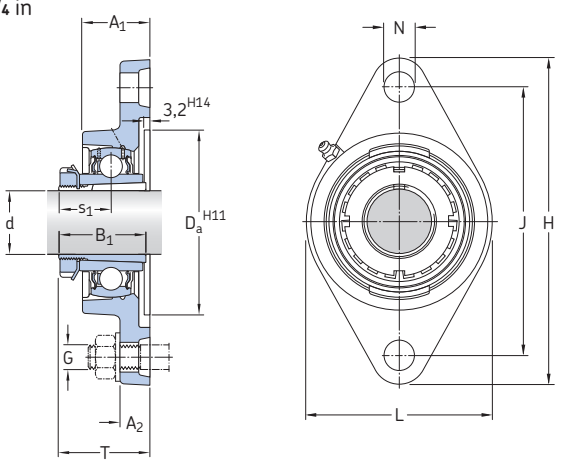

Dimensions												Designations[1]	
												Bearing unit	Adapter sleeve
d	A_1	A_2	B_1	D_a	H	J	L	N	G	s_1	T		
in/*mm*												–	
3/4 *19,05*	1.06 *27*	0.55 *14*	1.38 *35*	2.50 *63,5*	5.12 *130*	3.90 *99*	2.68 *68*	0.63 *16*	9/16 *14*	0.79 *20*	1.42 *36*	**FYTJ 25 KF**	**HE 2305**
15/16 *23,813*	1.20 *30,5*	0.53 *13,5*	1.50 *38*	3.00 *76,2*	5.83 *148*	4.61 *117*	3.15 *80*	0.63 *16*	9/16 *14*	0.87 *22*	1.57 *40*	**FYTJ 30 KF**	**HA 2306**
1 *25,4*	1.20 *30,5*	0.53 *13,5*	1.50 *38*	3.00 *76,2*	5.83 *148*	4.61 *117*	3.15 *80*	0.63 *16*	9/16 *14*	0.87 *22*	1.57 *40*	**FYTJ 30 KF**	**HE 2306**
1 3/16 *30,163*	1.34 *34*	0.63 *16*	1.69 *43*	3.50 *88,9*	6.34 *161*	5.12 *130*	3.78 *96*	0.63 *16*	9/16 *14*	0.96 *24,3*	1.70 *43,3*	**FYTJ 35 KF**	**HA 2307**
1 1/4 *31,75*	1.42 *36*	0.63 *16*	1.81 *46*	3.50 *88,9*	6.89 *175*	5.67 *144*	3.94 *100*	0.63 *16*	9/16 *14*	1.06 *27*	1.89 *48*	**FYTJ 40 KF**	**HE 2308**
1 7/16 *36,513*	1.50 *38*	0.71 *18*	1.97 *50*	3.87 *98,4*	7.40 *188*	5.83 *148*	4.25 *108*	0.75 *19*	5/8 *16*	1.12 *28,5*	1.99 *50,5*	**FYTJ 45 KF**	**HA 2309**
1 1/2 *38,1*	1.50 *38*	0.71 *18*	1.97 *50*	3.87 *98,4*	7.40 *188*	5.83 *148*	4.25 *108*	0.75 *19*	5/8 *16*	1.12 *28,5*	1.99 *50,5*	**FYTJ 45 KF**	**HE 2309**
1 5/8 *41,275*	1.57 *40*	0.71 *18*	2.17 *55*	4.00 *101,6*	7.68 *195*	6.18 *157*	4.53 *115*	0.75 *19*	5/8 *16*	1.20 *30,5*	2.07 *52,5*	**FYTJ 50 KF**	**HS 2310**
1 11/16 *42,863*	1.57 *40*	0.71 *18*	2.17 *55*	4.00 *101,6*	7.68 *195*	6.18 *157*	4.53 *115*	0.75 *19*	5/8 *16*	1.20 *30,5*	2.07 *52,5*	**FYTJ 50 KF**	**HA 2310**
1 3/4 *44,45*	1.57 *40*	0.71 *18*	2.17 *55*	4.00 *101,6*	7.68 *195*	6.18 *157*	4.53 *115*	0.75 *19*	5/8 *16*	1.20 *30,5*	2.07 *52,5*	**FYTJ 50 KF**	**HE 2310**

[1] Bearing unit and adapter sleeve to be ordered separately

Designations Bearing unit without adapter sleeve	Separate components Housing	Bearing	**Basic load ratings** dynamic C	static C_0	**Fatigue load** limit P_u	**Limiting speed**	**Mass** Bearing unit + sleeve
–			lbf/*kN*		lbf/*kN*	r/min	lb/*kg*
FYTJ 25 KF	FYTJ 505	YSA 205-2FK	3 150 *14*	1 760 *7,8*	80 *0,335*	7 000	1.60 *0,72*
FYTJ 30 KF	FYTJ 506	YSA 206-2FK	4 390 *19,5*	2 520 *11,2*	110 *0,475*	6 300	1.85 *0,83*
FYTJ 30 KF	FYTJ 506	YSA 206-2FK	4 390 *19,5*	2 520 *11,2*	110 *0,475*	6 300	1.85 *0,83*
FYTJ 35 KF	FYTJ 507	YSA 207-2FK	5 740 *25,5*	3 440 *15,3*	150 *0,655*	5 300	2.85 *1,30*
FYTJ 40 KF	FYTJ 508	YSA 208-2FK	6 910 *30,7*	4 280 *19*	180 *0,8*	4 800	3.65 *1,65*
FYTJ 45 KF	FYTJ 509	YSA 209-2FK	7 470 *33,2*	4 860 *21,6*	210 *0,915*	4 300	4.85 *2,20*
FYTJ 45 KF	FYTJ 509	YSA 209-2FK	7 470 *33,2*	4 860 *21,6*	210 *0,915*	4 300	4.85 *2,20*
FYTJ 50 KF	FYTJ 510	YSA 210-2FK	7 900 *35,1*	5 220 *23,2*	220 *0,98*	4 000	5.60 *2,55*
FYTJ 50 KF	FYTJ 510	YSA 210-2FK	7 900 *35,1*	5 220 *23,2*	220 *0,98*	4 000	5.60 *2,55*
FYTJ 50 KF	FYTJ 510	YSA 210-2FK	7 900 *35,1*	5 220 *23,2*	220 *0,98*	4 000	5.60 *2,55*

Flanged Y-bearing units with a cast housing with a round flange and grub screws, metric shafts

d **20 – 65** mm

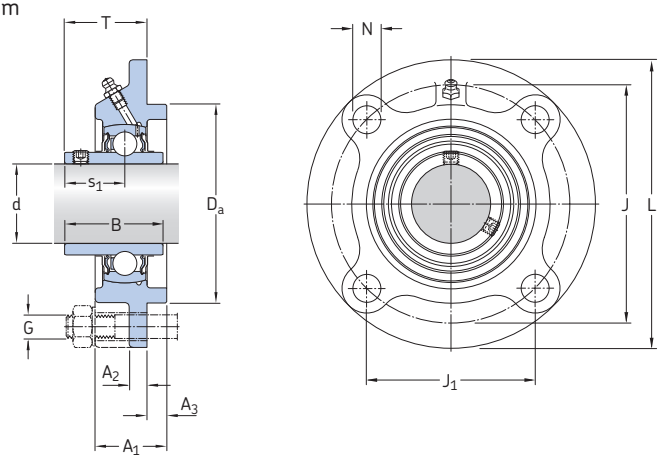

Dimesions													**Basic load ratings** dynamic	static	**Fatigue load limit**	**Limiting speed** with shaft tolerance	**Designation** Bearing unit
d	A_1	A_2	A_3	B	D_a h8	J	J_1	L	N	G	s_1	T	C	C_0	P_u	h6	
mm													kN		kN	r/min	–
20	25,5	7	5	31	62	78	55,2	100	12	10	18,3	28,3	12,7	6,55	0,28	8 500	**FYC 20 TF**
25	27	7	6	34,1	70	90	63,6	115	12	10	19,8	29,8	14	7,8	0,335	7 000	**FYC 25 TF**
30	31	8	8	38,1	80	100	70,7	125	12	10	22,2	32,2	19,5	11,2	0,475	6 300	**FYC 30 TF**
35	34	9	8	42,9	90	110	77,8	135	14	12	25,4	36,4	25,5	15,3	0,655	5 300	**FYC 35 TF**
40	36	9	10	49,2	100	120	84,9	145	14	12	30,2	41,2	30,7	19	0,8	4 800	**FYC 40 TF**
45	38	14	12	49,2	105	132	93,3	160	16	14	30,2	40,2	33,2	21,6	0,915	4 300	**FYC 45 TF**
50	40	14	12	51,6	110	138	97,6	165	16	14	32,6	42,6	35,1	23,2	0,98	4 000	**FYC 50 TF**
55	43	15	12	55,6	125	150	106,1	185	19	16	33,4	46,4	43,6	29	1,25	3 600	**FYC 55 TF**
60	48	15	12	65,1	135	160	113,1	195	19	16	39,7	56,7	52,7	36	1,53	3 400	**FYC 60 TF**
65	50	15	14	68,3	145	170	120,2	205	19	16	42,9	58,9	55,9	40	1,7	3 000	**FYC 65 TF**

Designations			Mass
Bearing unit	Separate components		Bearing unit
	Housing	Bearing	
–			kg
FYC 20 TF	FYC 504	YAR 204-2F	0,70
FYC 25 TF	FYC 505	YAR 205-2F	0,93
FYC 30 TF	FYC 506	YAR 206-2F	1,35
FYC 35 TF	FYC 507	YAR 207-2F	1,55
FYC 40 TF	FYC 508	YAR 208-2F	2,00
FYC 45 TF	FYC 509	YAR 209-2F	2,65
FYC 50 TF	FYC 510	YAR 210-2F	2,80
FYC 55 TF	FYC 511	YAR 211-2F	4,30
FYC 60 TF	FYC 512	YAR 212-2F	4,90
FYC 65 TF	FYC 513	YAR 213-2F	5,70

Flanged Y-bearing units with a pressed steel housing and grub screws, metric shafts
d **12 – 25** mm

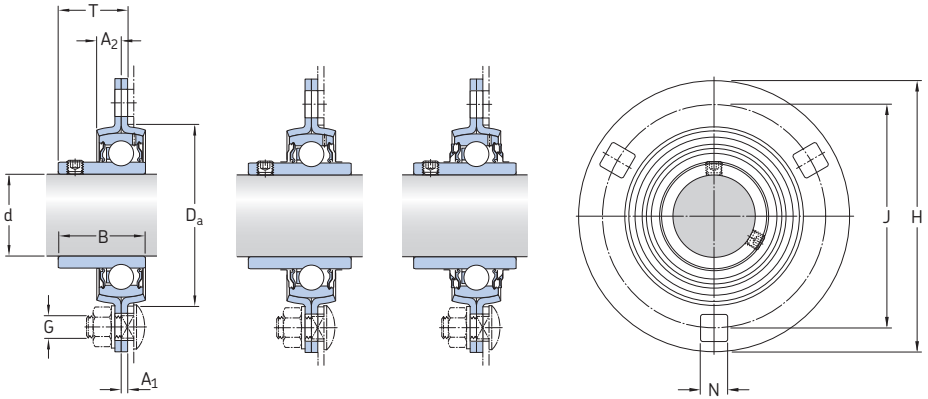

YAT YAR-2F YAR-2RF PF

Dimensions											Basic load ratings		Fatigue load limit	Permissible housing load	Designation
											dynamic	static			Bearing unit
d	A_1	A_2	B	D_a	H	H_1/L	J	N	G	T	C	C_0	P_u	radial	No order designation
mm											kN		kN	kN	–
12	2	7	27,4	49	81	–	63	7,1	6	17,9	9,56	4,75	0,2	2,5	PF 12 TF
	2	7	27,4	49	81	29	63	7,1	6	17,9	9,56	4,75	0,2	2,5	PFD 12 TF
	2	7	27,4	49	81	59	63	7,1	6	17,9	9,56	4,75	0,2	2,5	PFT 12 TF
15	2	7	27,4	49	81	–	63	7,1	6	17,9	9,56	4,75	0,2	2,5	PF 15 TF
	2	7	27,4	49	81	29	63	7,1	6	17,9	9,56	4,75	0,2	2,5	PFD 15 TF
	2	7	27,4	49	81	59	63	7,1	6	17,9	9,56	4,75	0,2	2,5	PFT 15 TF
17	2	7	22,1	49	81	–	63	7,1	6	17,9	9,56	4,75	0,2	2,5	PF 17 RM
	2	7	27,4	49	81	–	63	7,1	6	17,9	9,56	4,75	0,2	2,5	PF 17 TF
	2	7	22,1	49	81	29	63	7,1	6	17,9	9,56	4,75	0,2	2,5	PFD 17 RM
	2	7	27,4	49	81	29	63	7,1	6	17,9	9,56	4,75	0,2	2,5	PFD 17 TF
	2	7	22,1	49	81	59	63	7,1	6	17,9	9,56	4,75	0,2	2,5	PFT 17 RM
	2	7	27,4	49	81	59	63	7,1	6	17,9	9,56	4,75	0,2	2,5	PFT 17 TF
20	2	8	25,5	55	91	–	71,5	8,7	8	20,3	12,7	6,55	0,28	3,3	PF 20 RM
	2	8	31	55	91	–	71,5	8,7	8	20,3	12,7	6,55	0,28	3,3	PF 20 TF
	2	8	31	55	91	–	71,5	8,7	8	20,3	12,7	6,55	0,28	3,3	PF 20 TR
	2	8	25,5	55	91	32	71,5	8,7	8	20,3	12,7	6,55	0,28	3,3	PFD 20 RM
	2	8	31	55	91	32	71,5	8,7	8	20,3	12,7	6,55	0,28	3,3	PFD 20 TF
	2	8	31	55	91	32	71,5	8,7	8	20,3	12,7	6,55	0,28	3,3	PFD 20 TR
	2	8	25,5	55	91	67	71,5	8,7	8	20,3	12,7	6,55	0,28	3,3	PFT 20 RM
	2	8	31	55	91	67	71,5	8,7	8	20,3	12,7	6,55	0,28	3,3	PFT 20 TF
	2	8	31	55	91	67	71,5	8,7	8	20,3	12,7	6,55	0,28	3,3	PFT 20 TR
25	2	9	27,2	60	95	–	76	8,7	8	21,5	14	7,8	0,335	3,6	PF 25 RM
	2	9	34,1	60	95	–	76	8,7	8	21,8	14	7,8	0,335	3,6	PF 25 TF
	2	9	34,1	60	95	–	76	8,7	8	21,8	14	7,8	0,335	3,6	PF 25 TR
	2	9	27,2	60	95	34	76	8,7	8	21,5	14	7,8	0,335	3,6	PFD 25 RM
	2	9	34,1	60	95	34	76	8,7	8	21,8	14	7,8	0,335	3,6	PFD 25 TF
	2	9	34,1	60	95	34	76	8,7	8	21,8	14	7,8	0,335	3,6	PFD 25 TR
	2	9	27,2	60	95	71	76	8,7	8	21,5	14	7,8	0,335	3,6	PFT 25 RM
	2	9	34,1	60	95	71	76	8,7	8	21,8	14	7,8	0,335	3,6	PFT 25 TF
	2	9	34,1	60	95	71	76	8,7	8	21,8	14	7,8	0,335	3,6	PFT 25 TR

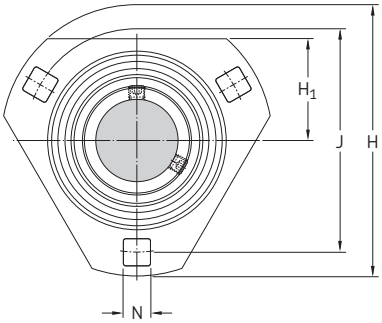

PFD

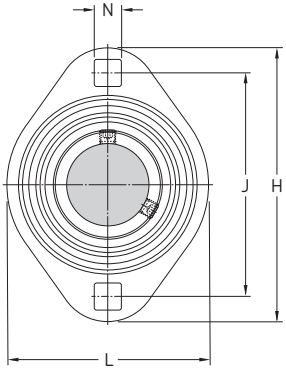

PFT

Designation Bearing unit No order designation	**Order designations** Housing	Bearing	**Mass** Bearing unit
–	–		kg
PF 12 TF	**PF 40**	**YAR 203/12-2F**	0,26
PFD 12 TF	**PFD 40**	**YAR 203/12-2F**	0,19
PFT 12 TF	**PFT 40**	**YAR 203/12-2F**	0,19
PF 15 TF	**PF 40**	**YAR 203/15-2F**	0,25
PFD 15 TF	**PFD 40**	**YAR 203/15-2F**	0,18
PFT 15 TF	**PFT 40**	**YAR 203/15-2F**	0,18
PF 17 RM	**PF 40**	**YAT 203**	0,22
PF 17 TF	**PF 40**	**YAR 203-2F**	0,24
PFD 17 RM	**PFD 40**	**YAT 203**	0,16
PFD 17 TF	**PFD 40**	**YAR 203-2F**	0,17
PFT 17 RM	**PFT 40**	**YAT 203**	0,16
PFT 17 TF	**PFT 40**	**YAR 203-2F**	0,17
PF 20 RM	**PF 47**	**YAT 204**	0,29
PF 20 TF	**PF 47**	**YAR 204-2F**	0,32
PF 20 TR	**PF 47**	**YAR 204-2RF**	0,32
PFD 20 RM	**PFD 47**	**YAT 204**	0,23
PFD 20 TF	**PFD 47**	**YAR 204-2F**	0,26
PFD 20 TR	**PFD 47**	**YAR 204-2RF**	0,26
PFT 20 RM	**PFT 47**	**YAT 204**	0,20
PFT 20 TF	**PFT 47**	**YAR 204-2F**	0,23
PFT 20 TR	**PFT 47**	**YAR 204-2RF**	0,23
PF 25 RM	**PF 52**	**YAT 205**	0,33
PF 25 TF	**PF 52**	**YAR 205-2F**	0,36
PF 25 TR	**PF 52**	**YAR 205-2RF**	0,36
PFD 25 RM	**PFD 52**	**YAT 205**	0,30
PFD 25 TF	**PFD 52**	**YAR 205-2F**	0,33
PFD 25 TR	**PFD 52**	**YAR 205-2RF**	0,33
PFT 25 RM	**PFT 52**	**YAT 205**	0,25
PFT 25 TF	**PFT 52**	**YAR 205-2F**	0,28
PFT 25 TR	**PFT 52**	**YAR 205-2RF**	0,28

Flanged Y-bearing units with a pressed steel housing and grub screws, metric shafts
d **30 – 50** mm

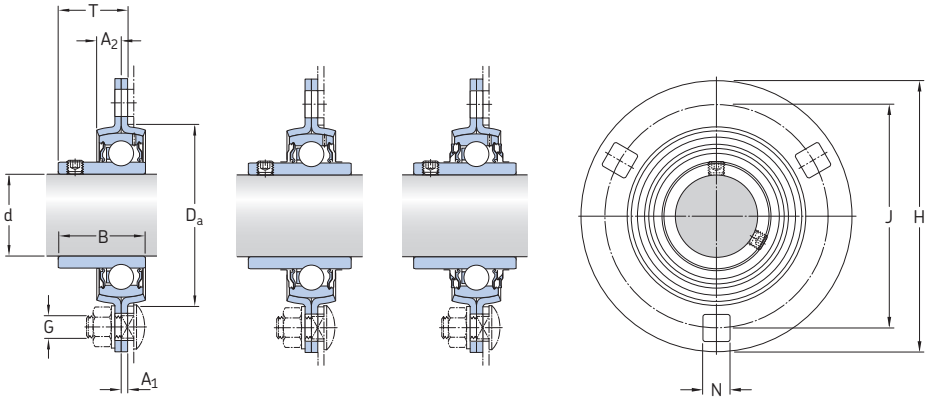

YAT YAR-2F YAR-2RF PF[1)]

Dimensions											Basic load ratings		Fatigue load limit	Permissible housing load	Designation
											dynamic	static			Bearing unit
d	A_1	A_2	B	D_a	H	H_1/L	J	N	G	T	C	C_0	P_u	radial	No order designation
mm											kN		kN	kN	–
30	2,5	9,5	30,2	71	112	–	90,5	10,5	10	23,5	19,5	11,2	0,475	5	PF 30 RM
	2,5	9,5	38,1	71	112	–	90,5	10,5	10	24,7	19,5	11,2	0,475	5	PF 30 TF
	2,5	9,5	38,1	71	112	–	90,5	10,5	10	24,7	19,5	11,2	0,475	5	PF 30 TR
	2,5	9,5	30,2	71	112	38	90,5	10,5	10	23,5	19,5	11,2	0,475	5	PFD 30 RM
	2,5	9,5	38,1	71	112	38	90,5	10,5	10	24,7	19,5	11,2	0,475	5	PFD 30 TF
	2,5	9,5	38,1	71	112	38	90,5	10,5	10	24,7	19,5	11,2	0,475	5	PFD 30 TR
	2,5	9,5	30,2	71	112	84	90,5	10,5	10	23,5	19,5	11,2	0,475	5	PFT 30 RM
	2,5	9,5	38,1	71	112	84	90,5	10,5	10	24,7	19,5	11,2	0,475	5	PFT 30 TF
	2,5	9,5	38,1	71	112	84	90,5	10,5	10	24,7	19,5	11,2	0,475	5	PFT 30 TR
35	2,5	10	33	81	122	–	100	11	10	25,8	25,5	15,3	0,655	6,5	PF 35 RM
	2,5	10	42,9	81	122	–	100	11	10	27,9	25,5	15,3	0,655	6,5	PF 35 TF
	2,5	10	42,9	81	122	–	100	11	10	27,9	25,5	15,3	0,655	6,5	PF 35 TR
	2,5	10	33	81	122	45	100	11	10	25,8	25,5	15,3	0,655	6,5	PFD 35 RM
	2,5	10	42,9	81	122	45	100	11	10	27,9	25,5	15,3	0,655	6,5	PFD 35 TF
	2,5	10	42,9	81	122	45	100	11	10	27,9	25,5	15,3	0,655	6,5	PFD 35 TR
	2,5	10	33	81	122	94	100	11	10	25,8	25,5	15,3	0,655	6,5	PFT 35 RM
	2,5	10	42,9	81	122	94	100	11	10	27,9	25,5	15,3	0,655	6,5	PFT 35 TF
	2,5	10	42,9	81	122	94	100	11	10	27,9	25,5	15,3	0,655	6,5	PFT 35 TR
40	3,5	10	36	91	148	–	119	13,5	12	28,8	30,7	19	0,8	7,5	PF 40 RM
	3,5	10	49,2	91	148	–	119	13,5	12	33,7	30,7	19	0,8	7,5	PF 40 TF
	3,5	10	49,2	91	148	–	119	13,5	12	33,7	30,7	19	0,8	7,5	PF 40 TR
	3,5	10	36	91	148	53	119	13,5	12	28,8	30,7	19	0,8	7,5	PFD 40 RM
	3,5	10	49,2	91	148	53	119	13,5	12	33,7	30,7	19	0,8	7,5	PFD 40 TF
	3,5	10	49,2	91	148	53	119	13,5	12	33,7	30,7	19	0,8	7,5	PFD 40 TR
	3,5	10	36	91	148	104	119	13,5	12	28,8	30,7	19	0,8	7,5	PFT 40 RM
	3,5	10	49,2	91	148	104	119	13,5	12	33,7	30,7	19	0,8	7,5	PFT 40 TF
	3,5	10	49,2	91	148	104	119	13,5	12	33,7	30,7	19	0,8	7,5	PFT 40 TR
45	3,5	10,5	37	97	149	–	120,6	13,5	12	29,3	33,2	21,6	0,915	8,3	PF 45 RM
	3,5	10,5	49,2	97	149	–	120,6	13,5	12	33,7	33,2	21,6	0,915	8,3	PF 45 TF
	3,5	10,5	49,2	97	149	–	120,6	13,5	12	33,7	33,2	21,6	0,915	8,3	PF 45 TR
50	4	11	38,9	102	155	–	127	13,5	12	31,6	35,1	23,2	0,98	9	PF 50 RM
	4	11	51,6	102	155	–	127	13,5	12	36,6	35,1	23,2	0,98	9	PF 50 TF
	4	11	51,6	102	155	–	127	13,5	12	36,6	35,1	23,2	0,98	9	PF 50 TR

[1)] Housings PF 80, PF 85 and PF 90 have four attachment bolt holes.

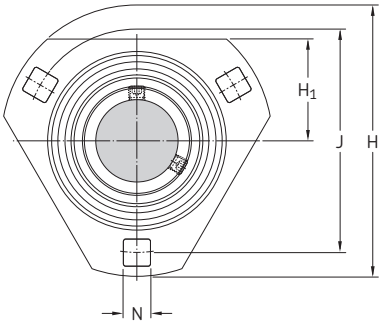

PFD

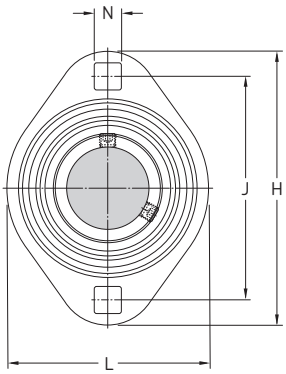

PFT

Designation Bearing unit No order designation	**Order designations** Housing	Bearing	**Mass** Bearing unit
–	–		kg
PF 30 RM	**PF 62**	**YAT 206**	0,53
PF 30 TF	**PF 62**	**YAR 206-2F**	0,58
PF 30 TR	**PF 62**	**YAR 206-2RF**	0,58
PFD 30 RM	**PFD 62**	**YAT 206**	0,42
PFD 30 TF	**PFD 62**	**YAR 206-2F**	0,47
PFD 30 TR	**PFD 62**	**YAR 206-2RF**	0,47
PFT 30 RM	**PFT 62**	**YAT 206**	0,41
PFT 30 TF	**PFT 62**	**YAR 206-2F**	0,46
PFT 30 TR	**PFT 62**	**YAR 206-2RF**	0,46
PF 35 RM	**PF 72**	**YAT 207**	0,67
PF 35 TF	**PF 72**	**YAR 207-2F**	0,77
PF 35 TR	**PF 72**	**YAR 207-2RF**	0,77
PFD 35 RM	**PFD 72**	**YAT 207**	0,54
PFD 35 TF	**PFD 72**	**YAR 207-2F**	0,64
PFD 35 TR	**PFD 72**	**YAR 207-2RF**	0,64
PFT 35 RM	**PFT 72**	**YAT 207**	0,55
PFT 35 TF	**PFT 72**	**YAR 207-2F**	0,65
PFT 35 TR	**PFT 72**	**YAR 207-2RF**	0,65
PF 40 RM	**PF 80**	**YAT 208**	1,20
PF 40 TF	**PF 80**	**YAR 208-2F**	1,30
PF 40 TR	**PF 80**	**YAR 208-2RF**	1,30
PFD 40 RM	**PFD 80**	**YAT 208**	0,90
PFD 40 TF	**PFD 80**	**YAR 208-2F**	1,00
PFD 40 TR	**PFD 80**	**YAR 208-2RF**	1,00
PFT 40 RM	**PFT 80**	**YAT 208**	0,78
PFT 40 TF	**PFT 80**	**YAR 208-2F**	0,90
PFT 40 TR	**PFT 80**	**YAR 208-2RF**	0,90
PF 45 RM	**PF 85**	**YAT 209**	1,25
PF 45 TF	**PF 85**	**YAR 209-2F**	1,35
PF 45 TR	**PF 85**	**YAR 209-2RF**	1,35
PF 50 RM	**PF 90**	**YAT 210**	1,40
PF 50 TF	**PF 90**	**YAR 210-2F**	1,55
PF 50 TR	**PF 90**	**YAR 210-2RF**	1,55

Flanged Y-bearing units with a pressed steel housing and grub screws, inch shafts
d **5/8 – 1 1/4** in

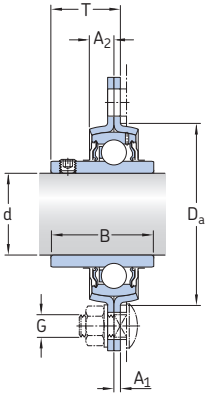

YAR-2F

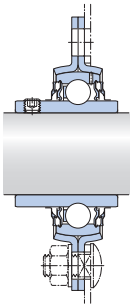
YAR-2RF

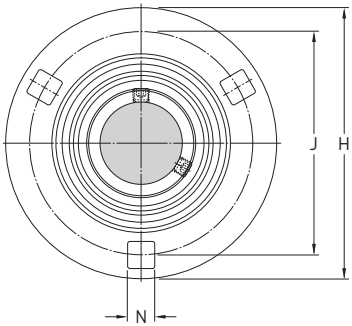

PF

Dimensions											Designation Bearing unit No order
d	A_1	A_2	B	D_a	H	H_1/L	J	N	G	T	designation
in/*mm*											–
5/8	0.08	0.28	1.08	1.93	3.19	–	2.48	0.28	1/4	0.70	PF 5/8 TF
15,875	*2*	*7*	*27,4*	*49*	*81*	–	*63*	*7,1*	*6*	*17,9*	
3/4	0.08	0.32	1.22	2.17	3.58	–	2.82	0.34	5/16	0.80	PF 3/4 TF
19,05	*2*	*8*	*31*	*55*	*91*	–	*71,5*	*8,7*	*8*	*20,3*	
	0.08	0.32	1.22	2.17	3.58	–	2.82	0.34	5/16	0.80	PF 3/4 TR
	2	*8*	*31*	*55*	*91*	–	*71,5*	*8,7*	*8*	*20,3*	
	0.08	0.32	1.22	2.17	3.58	1.26	2.82	0.34	5/16	0.80	PFD 3/4 TF
	2	*8*	*31*	*55*	*91*	*32*	*71,5*	*8,7*	*8*	*20,3*	
	0.08	0.32	1.22	2.17	3.58	1.26	2.82	0.34	5/16	0.80	PFD 3/4 TR
	2	*8*	*31*	*55*	*91*	*32*	*71,5*	*8,7*	*8*	*20,3*	
	0.08	0.32	1.22	2.17	3.58	2.64	2.82	0.34	5/16	0.80	PFT 3/4 TF
	2	*8*	*31*	*55*	*91*	*67*	*71,5*	*8,7*	*8*	*20,3*	
	0.08	0.32	1.22	2.17	3.58	2.64	2.82	0.34	v	0.80	PFT 3/4 TR
	2	*8*	*31*	*55*	*91*	*67*	*71,5*	*8,7*	*8*	*20,3*	
1	0.08	0.35	1.34	2.36	3.74	–	2.99	0.34	5/16	0.86	PF 1. TF
25,4	*2*	*9*	*34,1*	*60*	*95*	–	*76*	*8,7*	*8*	*21,8*	
	0.08	0.35	1.34	2.36	3.74	–	2.99	0.34	5/16	0.86	PF 1. TR
	2	*9*	*34,1*	*60*	*95*	–	*76*	*8,7*	*8*	*21,8*	
	0.08	0.35	1.34	2.36	3.74	1.34	2.99	0.34	5/16	0.86	PFD 1. TF
	2	*9*	*34,1*	*60*	*95*	*34*	*76*	*8,7*	*8*	*21,8*	
	0.08	0.35	1.34	2.36	3.74	1.34	2.99	0.34	5/16	0.86	PFD 1. TR
	2	*9*	*34,1*	*60*	*95*	*34*	*76*	*8,7*	*8*	*21,8*	
	0.08	0.35	1.34	2.36	3.74	2.80	2.99	0.34	5/16	0.86	PFT 1. TF
	2	*9*	*34,1*	*60*	*95*	*71*	*76*	*8,7*	*8*	*21,8*	
	0.08	0.35	1.34	2.36	3.74	2.80	2.99	0.34	5/16	0.86	PFT 1. TR
	2	*9*	*34,1*	*60*	*95*	*71*	*76*	*8,7*	*8*	*21,8*	
1 1/4	0.10	0.39	1.69	3.19	4.80	–	3.94	0.43	3/8	1.10	PF 1.1/4 TF
31,75	*2,5*	*10*	*42,9*	*81*	*122*	–	*100*	*11*	*10*	*27,9*	
	0.10	0.39	1.69	3.19	4.80	–	3.94	0.43	3/8	1.10	PF 1.1/4 TR
	2,5	*10*	*42,9*	*81*	*122*	–	*100*	*11*	*10*	*27,9*	
	0.10	0.39	1.69	3.19	4.80	1.77	3.94	0.43	3/8	1.10	PFD 1.1/4 TF
	2,5	*10*	*42,9*	*81*	*122*	*45*	*100*	*11*	*10*	*27,9*	
	0.10	0.39	1.69	3.19	4.80	1.77	3.94	0.43	3/8	1.10	PFD 1.1/4 TR
	2,5	*10*	*42,9*	*81*	*122*	*45*	*100*	*11*	*10*	*27,9*	
	0.10	0.39	1.69	3.19	4.80	3.7	3.94	0.43	3/8	1.10	PFT 1.1/4 TF
	2,5	*10*	*42,9*	*81*	*122*	*94*	*100*	*11*	*10*	*27,9*	
	0.10	0.39	1.69	3.19	4.80	3.7	3.94	0.43	3/8	1.10	PFT 1.1/4 TR
	2,5	*10*	*42,9*	*81*	*122*	*94*	*100*	*11*	*10*	*27,9*	

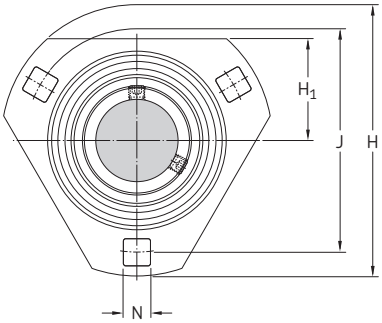

PFD

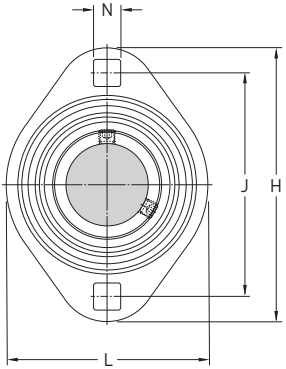

PFT

Designation Bearing unit No order designation	**Order designations** Housing	Bearing	**Basic load ratings** dynamic C	static C_0	**Fatigue load limit** P_u	**Permissible housing load radial**	**Mass** Bearing unit
–			lbf/*kN*		lbf/*kN*	lbf/*kN*	lb/*kg*
PF 5/8 TF	**PF 40**	**YAR 203-010-2F**	2 150 *9,56*	1 070 *4,75*	50 *0,2*	560 *2,5*	0.49 *0,22*
PF 3/4 TF	**PF 47**	**YAR 204-012-2F**	2 860 *12,7*	1 470 *6,55*	60 *0,28*	740 *3,3*	0.66 *0,30*
PF 3/4 TR	**PF 47**	**YAR 204-012-2RF**	2 860 *12,7*	1 470 *6,55*	60 *0,28*	740 *3,3*	0.66 *0,30*
PFD 3/4 TF	**PFD 47**	**YAR 204-012-2F**	2 860 *12,7*	1 470 *6,55*	60 *0,28*	740 *3,3*	0.53 *0,24*
PFD 3/4 TR	**PFD 47**	**YAR 204-012-2RF**	2 860 *12,7*	1 470 *6,55*	60 *0,28*	740 *3,3*	0.53 *0,24*
PFT 3/4 TF	**PFT 47**	**YAR 204-012-2F**	2 860 *12,7*	1 470 *6,55*	60 *0,28*	740 *3,3*	0.53 *0,24*
PFT 3/4 TR	**PFT 47**	**YAR 204-012-2RF**	2 860 *12,7*	1 470 *6,55*	60 *0,28*	740 *3,3*	0.53 *0,24*
PF 1. TF	**PF 52**	**YAR 205-100-2F**	3 150 *14*	1 760 *7,8*	80 *0,335*	810 *3,6*	0.77 *0,35*
PF 1. TR	**PF 52**	**YAR 205-100-2RF**	3 150 *14*	1 760 *7,8*	80 *0,335*	810 *3,6*	0.77 *0,35*
PFD 1. TF	**PFD 52**	**YAR 205-100-2F**	3 150 *14*	1 760 *7,8*	80 *0,335*	810 *3,6*	0.64 *0,29*
PFD 1. TR	**PFD 52**	**YAR 205-100-2RF**	3 150 *14*	1 760 *7,8*	80 *0,335*	810 *3,6*	0.64 *0,29*
PFT 1. TF	**PFT 52**	**YAR 205-100-2F**	3 150 *14*	1 760 *7,8*	80 *0,335*	810 *3,6*	0.62 *0,28*
PFT 1. TR	**PFT 52**	**YAR 205-100-2RF**	3 150 *14*	1 760 *7,8*	80 *0,335*	810 *3,6*	0.62 *0,28*
PF 1.1/4 TF	**PF 72**	**YAR 207-104-2F**	5 740 *25,5*	3 440 *15,3*	150 *0,655*	1 460 *6,5*	1.85 *0,83*
PF 1.1/4 TR	**PF 72**	**YAR 207-104-2RF**	5 740 *25,5*	3 440 *15,3*	150 *0,655*	1 460 *6,5*	1.85 *0,83*
PFD 1.1/4 TF	**PFD 72**	**YAR 207-104-2F**	5 740 *25,5*	3 440 *15,3*	150 *0,655*	1 460 *6,5*	1.50 *0,69*
PFD 1.1/4 TR	**PFD 72**	**YAR 207-104-2RF**	5 740 *25,5*	3 440 *15,3*	150 *0,655*	1 460 *6,5*	1.50 *0,69*
PFT 1.1/4 TF	**PFT 72**	**YAR 207-104-2F**	5 740 *25,5*	3 440 *15,3*	150 *0,655*	1 460 *6,5*	1.50 *0,69*
PFT 1.1/4 TR	**PFT 72**	**YAR 207-104-2RF**	5 740 *25,5*	3 440 *15,3*	150 *0,655*	1 460 *6,5*	1.50 *0,69*

Flanged Y-bearing units with a pressed steel housing and grub screws, inch shafts
d **1 1/2 – 1 3/4** in

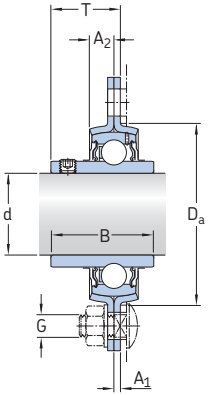

YAR-2F

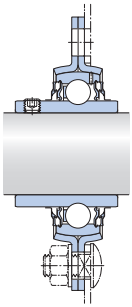
YAR-2RF

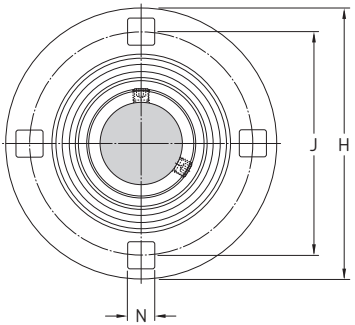

PF

Dimensions											Designation Bearing unit No order designation
d	A_1	A_2	B	D_a	H	H_1/L	J	N	G	T	
in/*mm*											–
1 1/2	0.14	0.39	1.94	3.58	5.83	–	4.69	0.53	1/2	1.33	PF 1.1/2 TF
38,1	*3,5*	*10*	*49,2*	*91*	*148*	–	*119*	*13,5*	*12*	*33,7*	
	0.14	0.39	1.94	3.58	5.83	–	4.69	0.53	1/2	1.33	PF 1.1/2 TR
	3,5	*10*	*49,2*	*91*	*148*	–	*119*	*13,5*	*12*	*33,7*	
	0.14	0.39	1.94	3.58	5.83	2.09	4.69	0.53	1/2	1.33	PFD 1.1/2 TF
	3,5	*10*	*49,2*	*91*	*148*	*53*	*119*	*13,5*	*12*	*33,7*	
	0.14	0.39	1.94	3.58	5.83	2.09	4.69	0.53	1/2	1.33	PFD 1.1/2 TR
	3,5	*10*	*49,2*	*91*	*148*	*53*	*119*	*13,5*	*12*	*33,7*	
	0.14	0.39	1.94	3.58	5.83	4.09	4.69	0.53	1/2	1.33	PFT 1.1/2 TF
	3,5	*10*	*49,2*	*91*	*148*	*104*	*119*	*13,5*	*12*	*33,7*	
	0.14	0.39	1.94	3.58	5.83	4.09	4.69	0.53	1/2	1.33	PFT 1.1/2 TR
	3,5	*10*	*49,2*	*91*	*148*	*104*	*119*	*13,5*	*12*	*33,7*	
1 3/4	0.14	0.41	1.94	3.82	5.87	–	4.75	0.53	1/2	1.33	PF 1.3/4 TF
44,45	*3,5*	*10,5*	*49,2*	*97*	*149*	–	*120,6*	*13,5*	*12*	*33,7*	
	0.14	0.41	1.94	3.82	5.87	–	4.75	0.53	1/2	1.33	PF 1.3/4 TR
	3,5	*10,5*	*49,2*	*97*	*149*	–	*120,6*	*13,5*	*12*	*33,7*	

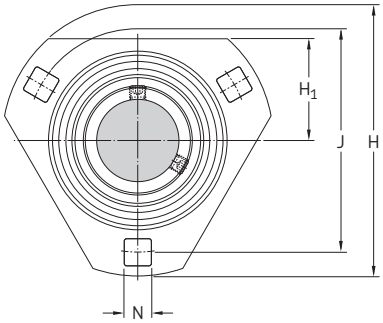

PFD

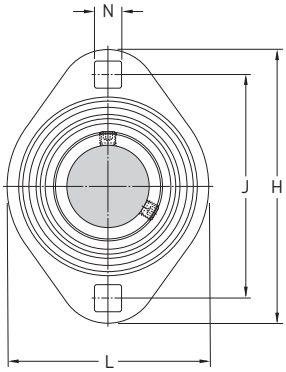

PFT

Designation Bearing unit No order designation	**Order designations** Housing	 Bearing	**Basic load ratings** dynamic C	 static C_0	**Fatigue load limit** P_u	**Permissible housing load radial**	**Mass** Bearing unit
–			lbf/*kN*		lbf/*kN*	lbf/*kN*	lb/*kg*
PF 1.1/2 TF	**PF 80**	**YAR 208-108-2F**	6 910 *30,7*	4 280 *19*	180 *0,8*	1 690 *7,5*	1.80 *0,81*
PF 1.1/2 TR	**PF 80**	**YAR 208-108-2RF**	6 910 *30,7*	4 280 *19*	180 *0,8*	1 690 *7,5*	1.80 *0,81*
PFD 1.1/2 TF	**PFD 80**	**YAR 208-108-2F**	6 910 *30,7*	4 280 *19*	180 *0,8*	1 690 *7,5*	2.35 *1,05*
PFD 1.1/2 TR	**PFD 80**	**YAR 208-108-2RF**	6 910 *30,7*	4 280 *19*	180 *0,8*	1 690 *7,5*	2.35 *1.05*
PFT 1.1/2 TF	**PFT 80**	**YAR 208-108-2F**	6 910 *30,7*	4 280 *19*	180 *0,8*	1 690 *7,5*	2.10 *0,95*
PFT 1.1/2 TR	**PFT 80**	**YAR 208-108-2RF**	6 910 *30,7*	4 280 *19*	180 *0,8*	1 690 *7,5*	2.10 *0,95*
PF 1.3/4 TF	**PF 85**	**YAR 209-112-2F**	7 470 *33,2*	4 860 *21,6*	210 *0,915*	1 870 *8,3*	2.75 *1,25*
PF 1.3/4 TR	**PF 85**	**YAR 209-112-2RF**	7 470 *33,2*	4 860 *21,6*	210 *0,915*	1 870 *8,3*	2.75 *1,25*

Flanged Y-bearing units with a pressed steel housing and an eccentric locking collar, metric shafts

d **15 – 35** mm

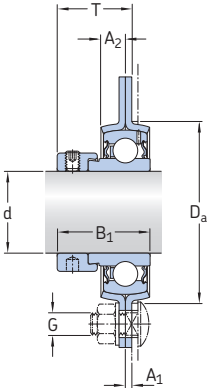

YET

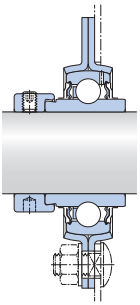

YEL .. -2F

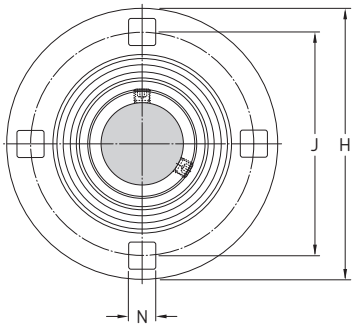

PF

Dimensions											Basic load ratings		Fatigue load limit	Permissible housing load	Designation Bearing unit No order
											dynamic	static		radial	
d	A_1	A_2	B_1	D_a	H	H_1/L	J	N	G	T	C	C_0	P_u		designation
mm											kN		kN	kN	–
15	2	7	28,6	49	81	–	63	7,1	6	24,1	9,56	4,75	0,2	2,5	PF 15 FM
	2	7	28,6	49	81	29	63	7,1	6	24,1	9,56	4,75	0,2	2,5	PFD 15 FM
	2	7	28,6	49	81	59	63	7,1	6	24,1	9,56	4,75	0,2	2,5	PFT 15 FM
17	2	7	28,6	49	81	–	63	7,1	6	24,1	9,56	4,75	0,2	2,5	PF 17 FM
	2	7	28,6	49	81	29	63	7,1	6	24,1	9,56	4,75	0,2	2,5	PFD 17 FM
	2	7	28,6	49	81	59	63	7,1	6	24,1	9,56	4,75	0,2	2,5	PFT 17 FM
20	2	8	31	55	91	–	71,5	8,7	8	25,5	12,7	6,55	0,28	3,3	PF 20 FM
	2	8	43,7	55	91	–	71,5	8,7	8	28,6	12,7	6,55	0,28	3,3	PF 20 WF
	2	8	31	55	91	32	71,5	8,7	8	25,5	12,7	6,55	0,28	3,3	PFD 20 FM
	2	8	43,7	55	91	32	71,5	8,7	8	28,6	12,7	6,55	0,28	3,3	PFD 20 WF
	2	8	31	55	91	67	71,5	8,7	8	25,5	12,7	6,55	0,28	3,3	PFT 20 FM
	2	8	43,4	55	91	67	71,5	8,7	8	28,6	12,7	6,55	0,28	3,3	PFT 20 WF
25	2	9	31	60	95	–	76	8,7	8	25,5	14	7,8	0,335	3,6	PF 25 FM
	2	9	44,4	60	95	–	76	8,7	8	28,9	14	7,8	0,335	3,6	PF 25 WF
	2	9	31	60	95	34	76	8,7	8	25,5	14	7,8	0,335	3,6	PFD 25 FM
	2	9	44,4	60	95	34	76	8,7	8	28,9	14	7,8	0,335	3,6	PFD 25 WF
	2	9	31	60	95	71	76	8,7	8	25,5	14	7,8	0,335	3,6	PFT 25 FM
	2	9	44,4	60	95	71	76	8,7	8	28,9	14	7,8	0,335	3,6	PFT 25 WF
30	2,5	9,5	35,7	71	112	–	90,5	10,5	10	29,2	19,5	11,2	0,475	5	PF 30 FM
	2,5	9,5	48,4	71	112	–	90,5	10,5	10	32,6	19,5	11,2	0,475	5	PF 30 WF
	2,5	9,5	35,7	71	112	38	90,5	10,5	10	29,2	19,5	11,2	0,475	5	PFD 30 FM
	2,5	9,5	48,4	71	112	38	90,5	10,5	10	32,6	19,5	11,2	0,475	5	PFD 30 WF
	2,5	9,5	35,7	71	112	84	90,5	10,5	10	29,2	19,5	11,2	0,475	5	PFT 30 FM
	2,5	9,5	48,4	71	112	84	90,5	10,5	10	32,6	19,5	11,2	0,475	5	PFT 30 WF
35	2,5	10	38,9	81	122	–	100	11	10	31,9	25,5	15,3	0,655	6,5	PF 35 FM
	2,5	10	51,1	81	122	–	100	11	10	34,8	25,5	15,3	0,655	6,5	PF 35 WF
	2,5	10	38,9	81	122	45	100	11	10	31,9	25,5	15,3	0,655	6,5	PFD 35 FM
	2,5	10	51,1	81	122	45	100	11	10	34,8	25,5	15,3	0,655	6,5	PFD 35 WF
	2,5	10	38,9	81	122	94	100	11	10	31,9	25,5	15,3	0,655	6,5	PFT 35 FM
	2,5	10	51,1	81	122	94	100	11	10	34,8	25,5	15,3	0,655	6,5	PFT 35 WF

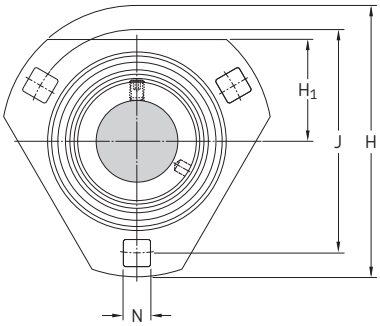

PFD

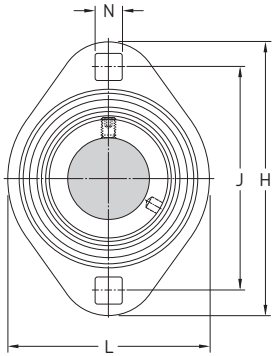

PFT

Designation Bearing unit No order designation	**Order designations** Housing	Bearing	**Mass** Bearing unit
–	–		kg
PF 15 FM	**PF 40**	**YET 203/15**	0,24
PFD 15 FM	**PFD 40**	**YET 203/15**	0,21
PFT 15 FM	**PFT 40**	**YET 203/15**	0,21
PF 17 FM	**PF 40**	**YET 203**	0,22
PFD 17 FM	**PFD 40**	**YET 203**	0,20
PFT 17 FM	**PFT 40**	**YET 203**	0,19
PF 20 FM	**PF 47**	**YET 204**	0,30
PF 20 WF	**PF 47**	**YEL 204-2F**	0,33
PFD 20 FM	**PFD 47**	**YET 204**	0,26
PFD 20 WF	**PFD 47**	**YEL 204-2F**	0,29
PFT 20 FM	**PFT 47**	**YET 204**	0,25
PFT 20 WF	**PFT 47**	**YEL 204-2F**	0,28
PF 25 FM	**PF 52**	**YET 205**	0,35
PF 25 WF	**PF 52**	**YEL 205-2F**	0,40
PFD 25 FM	**PFD 52**	**YET 205**	0,30
PFD 25 WF	**PFD 52**	**YEL 205-2F**	0,35
PFT 25 FM	**PFT 52**	**YET 205**	0,29
PFT 25 WF	**PFT 52**	**YEL 205-2F**	0,34
PF 30 FM	**PF 62**	**YET 206**	0,56
PF 30 WF	**PF 62**	**YEL 206-2F**	0,62
PFD 30 FM	**PFD 62**	**YET 206**	0,48
PFD 30 WF	**PFD 62**	**YEL 206-2F**	0,54
PFT 30 FM	**PFT 62**	**YET 206**	0,46
PFT 30 WF	**PFT 62**	**YEL 206-2F**	0,52
PF 35 FM	**PF 72**	**YET 207**	0,70
PF 35 WF	**PF 72**	**YEL 207-2F**	0,78
PFD 35 FM	**PFD 72**	**YET 207**	0,66
PFD 35 WF	**PFD 72**	**YEL 207-2F**	0,74
PFT 35 FM	**PFT 72**	**YET 207**	0,72
PFT 35 WF	**PFT 72**	**YEL 207-2F**	0,80

Flanged Y-bearing units with a pressed steel housing and an eccentric locking collar, metric shafts

d **40 – 50** mm

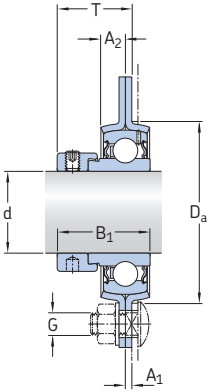

YET

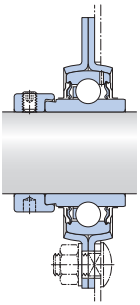

YEL .. -2F

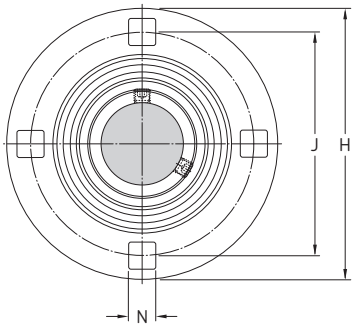

PF

Dimensions											Basic load ratings		Fatigue load	Permissible housing load	Designation
											dynamic	static	limit	radial	Bearing unit No order
d	A_1	A_2	B_1	D_a	H	H_1/L	J	N	G	T	C	C_0	P_u		designation
mm											kN		kN	kN	–
40	3,5	10	43,7	91	148	–	119	13,5	12	36,2	30,7	19	0,8	7,5	PF 40 FM
	3,5	10	56,3	91	148	–	119	13,5	12	38,4	30,7	19	0,8	7,5	PF 40 WF
	3,5	10	43,7	91	148	53	119	13,5	12	36,2	30,7	19	0,8	7,5	PFD 40 FM
	3,5	10	56,3	91	148	53	119	13,5	12	38,4	30,7	19	0,8	7,5	PFD 40 WF
	3,5	10	43,7	91	148	104	119	13,5	12	36,2	30,7	19	0,8	7,5	PFT 40 FM
	3,5	10	56,3	91	148	104	119	13,5	12	38,4	30,7	19	0,8	7,5	PFT 40 WF
45	3,5	10,5	43,7	97	149	–	120,6	13,5	12	36,2	33,2	21,6	0,915	8,3	PF 45 FM
	3,5	10,5	56,3	97	149	–	120,6	13,5	12	38,4	33,2	21,6	0,915	8,3	PF 45 WF
50	4	11	43,7	102	155	–	127	13,5	12	36,7	35,1	23,2	0,98	9	PF 50 FM
	4	11	62,7	102	155	–	127	13,5	12	42,1	35,1	23,2	0,98	9	PF 50 WF

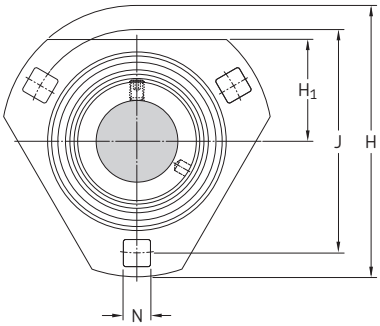

PFD

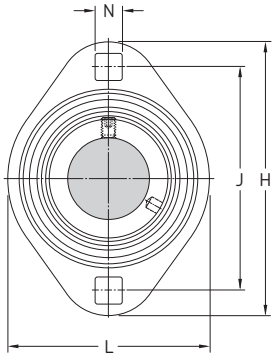

PFT

Designation Bearing unit No order designation	**Order designations** Housing	Bearing	**Mass** Bearing unit
–	–		kg
PF 40 FM	**PF 80**	**YET 208**	1,20
PF 40 WF	**PF 80**	**YEL 208-2F**	1,30
PFD 40 FM	**PFD 80**	**YET 208**	1,05
PFD 40 WF	**PFD 80**	**YEL 208-2F**	1,15
PFT 40 FM	**PFT 80**	**YET 208**	0,94
PFT 40 WF	**PFT 80**	**YEL 208-2F**	1,00
PF 45 FM	**PF 85**	**YET 209**	1,30
PF 45 WF	**PF 85**	**YEL 209-2F**	1,40
PF 50 FM	**PF 90**	**YET 210**	1,50
PF 50 WF	**PF 90**	**YEL 210-2F**	1,65

Flanged Y-bearing units with a pressed steel housing and an eccentric locking collar, inch shafts

d **3/4 – 1 1/2** in

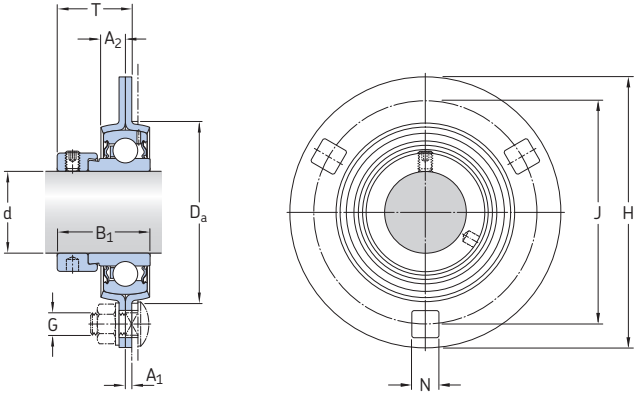

PF[1)]

Dimensions											Designation Bearing unit No order designation
d	A_1	A_2	B_1	D_a	H	H_1/L	J	N	G	T	–
in/*mm*											–
3/4	0.08	0.31	1.22	2.17	3.58	–	2.81	0.34	5/16	1.00	PF 3/4 FM
19,05	*2*	*8*	*31*	*55*	*91*	–	*71,5*	*8,7*	*8*	*25,5*	
	0.08	0.31	1.22	2.17	3.58	1.26	2.81	0.34	5/16	1.00	PFD 3/4 FM
	2	*8*	*31*	*55*	*91*	*32*	*71,5*	*8,7*	*8*	*25,5*	
	0.08	0.31	1.22	2.17	3.58	2.64	2.81	0.34	5/16	1.00	PFT 3/4 FM
	2	*8*	*31*	*55*	*91*	*67*	*71,5*	*8,7*	*8*	*25,5*	
1	0.08	0.35	1.22	2.36	3.74	–	2.99	0.34	5/16	1.00	PF 1. FM
25,4	*2*	*9*	*31*	*60*	*95*	–	*76*	*8,7*	*8*	*25,5*	
	0.08	0.35	1.22	2.36	3.74	1.34	2.99	0.34	5/16	1.00	PFD 1. FM
	2	*9*	*31*	*60*	*95*	*34*	*76*	*8,7*	*8*	*25,5*	
	0.08	0.35	1.22	2.36	3.74	2.8	2.99	0.34	5/16	1.00	PFT 1. FM
	2	*9*	*31*	*60*	*95*	*71*	*76*	*8,7*	*8*	*25,5*	
1 1/2	0.14	0.39	1.72	3.58	5.83	–	4.69	0.53	1/2	1.43	PF 1.1/2 FM
38,1	*3,5*	*10*	*43,7*	*91*	*148*	–	*119*	*13,5*	*12*	*36,2*	
	0.14	0.39	1.72	3.58	5.83	2.09	4.69	0.53	1/2	1.43	PFD 1.1/2 FM
	3,5	*10*	*43,7*	*91*	*148*	*53*	*119*	*13,5*	*12*	*36,2*	
	0.14	0.39	1.72	3.58	5.83	4.09	4.69	0.53	1/2	1.43	PFT 1.1/2 FM
	3,5	*10*	*43,7*	*91*	*148*	*104*	*119*	*13,5*	*12*	*36,2*	

[1)] Housing PF 80 has four attachment bolt holes.

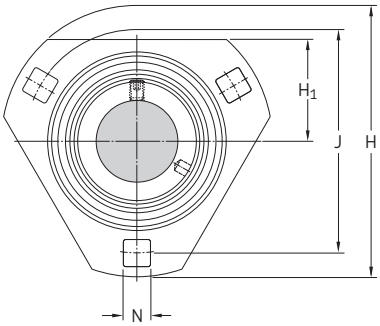

PFD

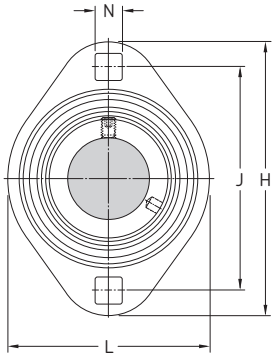

PFT

Designation Bearing unit No order designation	**Order designations** Housing	 Bearing	**Basic load ratings** dynamic C	 static C_0	**Fatigue load** limit P_u	**Permissible housing load** radial	**Mass** Bearing unit
–	–		lbf/*kN*		lbf/*kN*	lbf/*kN*	lb/*kg*
PF 3/4 FM	**PF 47**	**YET 204-012**	2 860 *12,7*	1 470 *6,55*	60 *0,28*	740 *3,3*	0.70 *0,31*
PFD 3/4 FM	**PFD 47**	**YET 204-012**	2 860 *12,7*	1 470 *6,55*	60 *0,28*	740 *3,3*	0.60 *0,27*
PFT 3/4 FM	**PFT 47**	**YET 204-012**	2 860 *12,7*	1 470 *6,55*	60 *0,28*	740 *3,3*	0.60 *0,26*
PF 1. FM	**PF 52**	**YET 205-100**	3 150 *14*	1 760 *7,8*	80 *0,335*	810 *3,6*	0.80 *0,35*
PFD 1. FM	**PFD 52**	**YET 205-100**	3 150 *14*	1 760 *7,8*	80 *0,335*	810 *3,6*	0.80 *0,35*
PFT 1. FM	**PFT 52**	**YET 205-100**	3 150 *14*	1 760 *7,8*	80 *0,335*	810 *3,6*	0.60 *0,29*
PF 1.1/2 FM	**PF 80**	**YET 208-108**	6 910 *30,7*	4 280 *19*	180 *0,8*	1 690 *7,5*	2.70 *1,25*
PFD 1.1/2 FM	**PFD 80**	**YET 208-108**	6 910 *30,7*	4 280 *19*	180 *0,8*	1 690 *7,5*	2.30 *1,05*
PFT 1.1/2 FM	**PFT 80**	**YET 208-108**	6 910 *30,7*	4 280 *19*	180 *0,8*	1 690 *7,5*	2.20 *0,98*


SKF

Y-bearing take-up units

Designs **236**

Data – general **236**
Dimensions 236
Tolerances 236
Radial internal clearance 237
Materials 237
Load carrying ability of the housings 237
End covers 237
Grease fills 237
Mounting 237

Product tables **238**
5.1 Y-bearing take-up units with a cast housing and grub screws, metric shafts 238
inch shafts 240
5.2 Y-bearing take-up units with a cast housing and an eccentric locking collar, metric shafts 244

Designs

Y-bearing take-up units consist of a cast housing and an insert bearing (→ **fig. 1**). These units are typically mounted in take-up frames and connected by an adjustment screw. A grease fitting is provided in the housing for relubrication. Standard Y-bearing take-up units can be located on the shaft via the inner ring of the insert bearing with either:

- grub (set) screws
- an eccentric locking collar

The Y-bearing is sealed with either:

- the standard integral seal
- the standard integral seal and an additional flinger

For additional information about Y-bearings, refer to the section *Y-bearings*, starting on **page 79**.

Fig. 1



Fig. 2

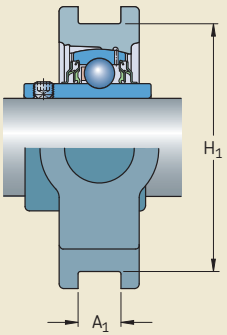

Data – general

Dimensions

The boundary dimensions of SKF Y-bearing take-up housings in the:

- TU series are in accordance with ISO 3228:1993
- TUJ series are in accordance with JIS B 1559-1995

Tolerances

The tolerances (→ **fig. 2**), which are in accordance with ISO 3228:1993, are:

- ± 0,25 mm for the distance between the guide surfaces H_1
- within the tolerance range H13 for the width of the guide surfaces A_1

Information about the tolerances of the inner ring bore diameter can be found in the section *Y-bearings* on **page 89**.

Radial internal clearance

The Y-bearing used in a Y-bearing take-up unit has the same radial internal clearance as a similarly sized individual Y-bearing. The values for radial internal clearance can be found in the section *Y-bearings* on **page 90**.

Materials

The housings for Y-bearing take-up units are manufactured from grey cast iron EN-GJL HB195 in accordance with EN 1561:1997.

Load carrying ability of the housings

Cast housings can withstand the same dynamic and static loads as their insert bearings. Therefore, Y-bearing take-up units may also be used where shock loads or variable axial loads occur, provided the adjustment screw and the way it is secured to the Y-bearing take-up unit is sufficiently strong.

If SKF Y-bearing units are to be used in an application where health, safety, or the environment is at risk, contact the SKF application engineering service during the design phase.

End covers

To protect the shaft ends and avoid any accidents, end covers are available for Y-bearing take-up units in the TU series (→ **fig. 3**).

In the product tables, end covers in the ECY 2 series are shown together with the appropriate bearing unit. The designation of the end cover is listed, together with the distance that the end cover protrudes from the housing.

For additional information about end covers, refer to the section *Design of Y-bearing arrangements* on **page 47**.

Grease fills

All standard SKF Y-bearing take-up units are filled with a high-quality, long-lasting grease containing a lithium-calcium thickener that has a consistency of 2 on the NLGI scale.

For additional information about lubricants and lubrication, refer to the section *Lubrication and maintenance*, starting on **page 48**.

Fig. 3

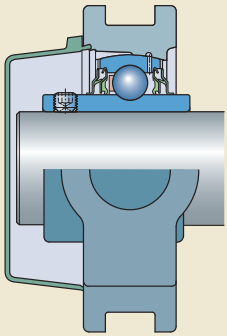

Mounting

The mounting procedures for a Y-bearing take-up unit depend on the method used to attach the unit to the shaft. The procedures are briefly described in the section *Mounting instructions*, starting on **page 52**.

Y-bearing take-up units with a cast housing and grub screws, metric shafts
d **20 – 60** mm

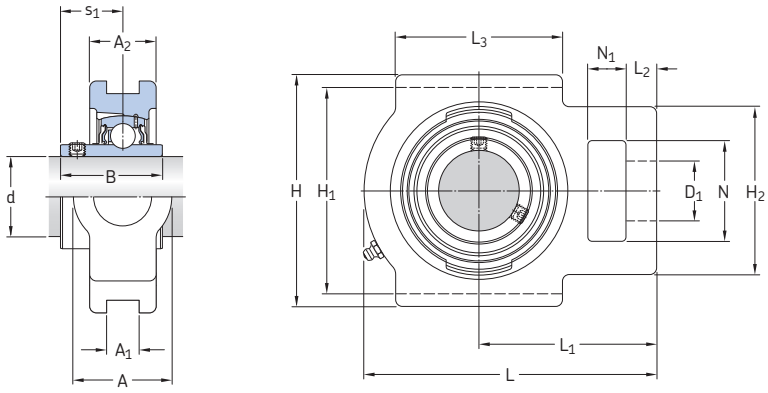

Dimensions																Designation Bearing unit
d	A	A_1	A_2	B	D_1	H	H_1	H_2	L	L_1	L_2	L_3	N	N_1	s_1	
mm																–
20	34	13,5	25	31	19	92	76	54	97	62	10	54	32	16	18,3	**TU 20 TF**
	34	12	25	31	19	92	76	54	97	62	10	54	32	16	18,3	**TUJ 20 TF**
25	34	13,5	25	34,1	19	91	76	53	100	64	10	52	33	16	19,8	**TU 25 TF**
	34	12	25	34,1	19	91	76	53	100	64	10	52	33	16	19,8	**TUJ 25 TF**
30	37	13,5	28	38,1	22	104	89	56	114	70	10	57	37	16	22,2	**TU 30 TF**
	37	12	28	38,1	22	104	89	56	114	70	10	57	37	16	22,2	**TUJ 30 TF**
35	37	13,5	30	42,9	22	103	89	64	129	78	12	64	38	17	25,4	**TU 35 TF**
	37	12	30	42,9	22	103	89	64	129	78	12	64	38	17	25,4	**TUJ 35 TF**
40	49	17,5	33	49,2	29	115	101	83	145	88	15	83	50	19	30,2	**TU 40 TF**
	49	16	33	49,2	29	115	102	83	145	88	15	83	50	19	30,2	**TUJ 40 TF**
45	49	17,5	35	49,2	29	117	101	83	144	87	15	83	49	19	30,2	**TU 45 TF**
	49	16	35	49,2	29	117	102	83	144	87	15	83	49	19	30,2	**TUJ 45 TF**
50	49	17,5	36	51,6	29	117	101	83	149	90	16	86	49	19	32,6	**TU 50 TF**
	49	16	36	51,6	29	117	102	83	149	90	16	86	49	19	32,6	**TUJ 50 TF**
55	64	27	41	55,6	35	146	130	102	171	106	19	95	64	25	33,4	**TU 55 TF**
	64	22	41	55,6	35	146	130	102	171	106	19	95	64	25	33,4	**TUJ 55 TF**
60	60	22	44	65,1	35	146	130	102	186	118	19	100	63,5	32	39,7	**TUJ 60 TF**

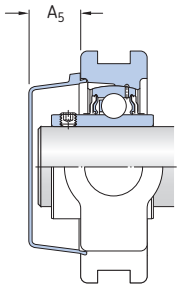

Designations			Basic load ratings		Fatigue load limit	Limiting speed	Mass	Appropriate end cover	
Bearing unit	Separate components		dynamic	static		with shaft tolerance h6	Bearing unit	Designation	Dimension
	Housing	Bearing	C	C_0	P_u				A_5
–			kN		kN	r/min	kg	–	mm
TU 20 TF	TU 504 M	YAR 204-2F	12,7	6,55	0,28	8 500	0,73	ECY 204	18,5
TUJ 20 TF	TUJ 504	YAR 204-2F	12,7	6,55	0,28	8 500	0,76	–	–
TU 25 TF	TU 505 M	YAR 205-2F	14	7,8	0,335	7 000	0,77	ECY 205	18
TUJ 25 TF	TUJ 505	YAR 205-2F	14	7,8	0,335	7 000	0,82	–	–
TU 30 TF	TU 506 M	YAR 206-2F	19,5	11,2	0,475	6 300	1,25	ECY 206	20
TUJ 30 TF	TUJ 506	YAR 206-2F	19,5	11,2	0,475	6 300	1,28	–	–
TU 35 TF	TU 507 M	YAR 207-2F	25,5	15,3	0,655	5 300	1,45	ECY 207	22
TUJ 35 TF	TUJ 507	YAR 207-2F	25,5	15,3	0,655	5 300	1,50	–	–
TU 40 TF	TU 508 M	YAR 208-2F	30,7	19	0,8	4 800	2,30	ECY 208	23,5
TUJ 40 TF	TUJ 508	YAR 208-2F	30,7	19	0,8	4 800	2,35	–	–
TU 45 TF	TU 509 M	YAR 209-2F	33,2	21,6	0,915	4 300	2,30	ECY 209	23
TUJ 45 TF	TUJ 509	YAR 209-2F	33,2	21,6	0,915	4 300	2,35	–	–
TU 50 TF	TU 510 M	YAR 210-2F	35,1	23,2	0,98	4 000	2,40	ECY 210	29,5
TUJ 50 TF	TUJ 510	YAR 210-2F	35,1	23,2	0,98	4 000	2,50	–	–
TU 55 TF	TU 511 M	YAR 211-2F	43,6	29	1,25	3 600	3,85	ECY 211	34
TUJ 55 TF	TUJ 511	YAR 211-2F	43,6	29	1,25	3 600	4,00	–	–
TUJ 60 TF	TUJ 512	YAR 212-2F	52,7	36	1,53	3 400	5,00	–	–

Y-bearing take-up units with a cast housing and grub screws, inch shafts
d **3/4 – 1 7/16** in

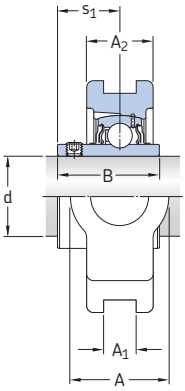

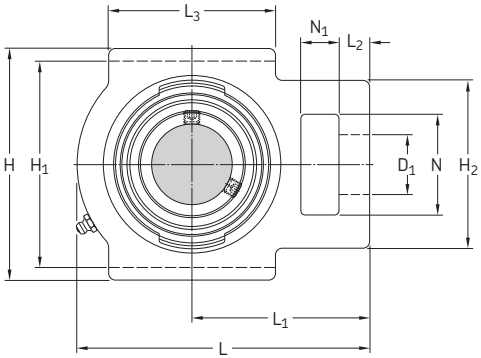

Dimensions																**Designation** Bearing unit
d	A	A_1	A_2	B	D_1	H	H_1	H_2	L	L_1	L_2	L_3	N	N_1	s_1	
in/*mm*																–
3/4 *19,05*	1.34 *34*	0.53 *13,5*	0.98 *25*	1.22 *31*	0.75 *19*	3.62 *92*	2.99 *76*	2.13 *54*	3.82 *97*	2.44 *62*	0.39 *10*	2.13 *54*	1.26 *32*	0.63 *16*	0.72 *18,3*	**TU 3/4 TF**
13/16 *20,638*	1.34 *34*	0.53 *13,5*	0.98 *25*	1.34 *34,1*	0.75 *19*	3.58 *91*	2.99 *76*	2.09 *53*	3.94 *100*	2.52 *64*	0.39 *10*	2.05 *52*	1.3 *33*	0.63 *16*	0.78 *19,8*	**TU 13/16 TF**
7/8 *22,225*	1.34 *34*	0.53 *13,5*	0.98 *25*	1.34 *34,1*	0.75 *19*	3.58 *91*	2.99 *76*	2.09 *53*	3.94 *100*	2.52 *64*	0.39 *10*	2.05 *52*	1.3 *33*	0.63 *16*	0.78 *19,8*	**TU 7/8 TF**
15/16 *23,813*	1.34 *34*	0.53 *13,5*	0.98 *25*	1.34 *34,1*	0.75 *19*	3.58 *91*	2.99 *76*	2.09 *53*	3.94 *100*	2.52 *64*	0.39 *10*	2.05 *52*	1.3 *33*	0.63 *16*	0.78 *19,8*	**TU 15/16 TF**
1 *25,4*	1.34 *34*	0.53 *13,5*	0.98 *25*	1.34 *34,1*	0.75 *19*	3.58 *91*	2.99 *76*	2.09 *53*	3.94 *100*	2.52 *64*	0.39 *10*	2.05 *52*	1.3 *33*	0.63 *16*	0.78 *19,8*	**TU 1. TF**
1 1/16 *26,988*	1.46 *37*	0.53 *13,5*	1.1 *28*	1.5 *38,1*	0.87 *22*	4.09 *104*	3.5 *89*	2.2 *56*	4.49 *114*	2.76 *70*	0.39 *10*	2.24 *57*	1.46 *37*	0.63 *16*	0.87 *22,2*	**TU 1.1/16 TF**
1 1/8 *28,575*	1.46 *37*	0.53 *13,5*	1.1 *28*	1.5 *38,1*	0.87 *22*	4.09 *104*	3.5 *89*	2.2 *56*	4.49 *114*	2.76 *70*	0.39 *10*	2.24 *57*	1.46 *37*	0.63 *16*	0.87 *22,2*	**TU 1.1/8 TF**
1 3/16 *30,163*	1.46 *37*	0.53 *13,5*	1.1 *28*	1.5 *38,1*	0.87 *22*	4.09 *104*	3.5 *89*	2.2 *56*	4.49 *114*	2.76 *70*	0.39 *10*	2.24 *57*	1.46 *37*	0.63 *16*	0.87 *22,2*	**TU 1.3/16 TF**
1 1/4 *31,75*	1.46 *37*	0.53 *13,5*	1.18 *30*	1.69 *42,9*	0.87 *22*	4.06 *103*	3.5 *89*	2.52 *64*	5.08 *129*	3.07 *78*	0.47 *12*	2.52 *64*	1.5 *38*	0.67 *17*	1 *25,4*	**TU 1.1/4 TF**
1 5/16 *33,338*	1.46 *37*	0.53 *13,5*	1.18 *30*	1.69 *42,9*	0.87 *22*	4.06 *103*	3.5 *89*	2.52 *64*	5.08 *129*	3.07 *78*	0.47 *12*	2.52 *64*	1.5 *38*	0.67 *17*	1 *25,4*	**TU 1.5/16 TF**
1 3/8 *34,925*	1.46 *37*	0.53 *13,5*	1.18 *30*	1.69 *42,9*	0.87 *22*	4.06 *103*	3.5 *89*	2.52 *64*	5.08 *129*	3.07 *78*	0.47 *12*	2.52 *64*	1.5 *38*	0.67 *17*	1 *25,4*	**TU 1.3/8 TF**
1 7/16 *36,513*	1.46 *37*	0.53 *13,5*	1.18 *30*	1.69 *42,9*	0.87 *22*	4.06 *103*	3.5 *89*	2.52 *64*	5.08 *129*	3.07 *78*	0.47 *12*	2.52 *64*	1.5 *38*	0.67 *17*	1 *25,4*	**TU 1.7/16 TF**

Designations Bearing unit	Separate components Housing	 Bearing	**Basic load ratings** dynamic C	 static C_0	**Fatigue load limit** P_u	**Limiting speed** with shaft tolerance h6	**Mass** Bearing unit
–			lbf/*kN*		lbf/*kN*	r/min	lb/*kg*
TU 3/4 TF	TU 504 U	YAR 204-012-2F	2 860 *12,7*	1 470 *6,55*	60 *0,28*	8 500	1.61 *0,73*
TU 13/16 TF	TU 505 U	YAR 205-013-2F	3 150 *14*	1 760 *7,8*	80 *0,335*	7 000	1.79 *0,81*
TU 7/8 TF	TU 505 U	YAR 205-014-2F	3 150 *14*	1 760 *7,8*	80 *0,335*	7 000	1.76 *0,80*
TU 15/16 TF	TU 505 U	YAR 205-015-2F	3 150 *14*	1 760 *7,8*	80 *0,335*	7 000	1.72 *0,78*
TU 1. TF	TU 505 M	YAR 205-100-2F	3 150 *14*	1 760 *7,8*	80 *0,335*	7 000	1.68 *0,76*
TU 1.1/16 TF	TU 506 U	YAR 206-101-2F	4 390 *19,5*	2 520 *11,2*	110 *0,475*	6 300	2.85 *1,30*
TU 1.1/8 TF	TU 506 U	YAR 206-102-2F	4 390 *19,5*	2 520 *11,2*	110 *0,475*	6 300	2.80 *1,25*
TU 1.3/16 TF	TU 506 U	YAR 206-103-2F	4 390 *19,5*	2 520 *11,2*	110 *0,475*	6 300	2.75 *1,25*
TU 1.1/4 TF	TU 507 M	YAR 207-104-2F	5 740 *25,5*	3 440 *15,3*	150 *0,655*	5 300	3.30 *1,50*
TU 1.5/16 TF	TU 507 U	YAR 207-105-2F	5 740 *25,5*	3 440 *15,3*	150 *0,655*	5 300	3.30 *1,50*
TU 1.3/8 TF	TU 507 U	YAR 207-106-2F	5 740 *25,5*	3 440 *15,3*	150 *0,655*	5 300	3.20 *1,45*
TU 1.7/16 TF	TU 507 U	YAR 207-107-2F	5 740 *25,5*	3 440 *15,3*	150 *0,655*	5 300	3.15 *1,45*

Y-bearing take-up units with a cast housing and grub screws, inch shafts
d **1 1/2 – 2 3/16** in

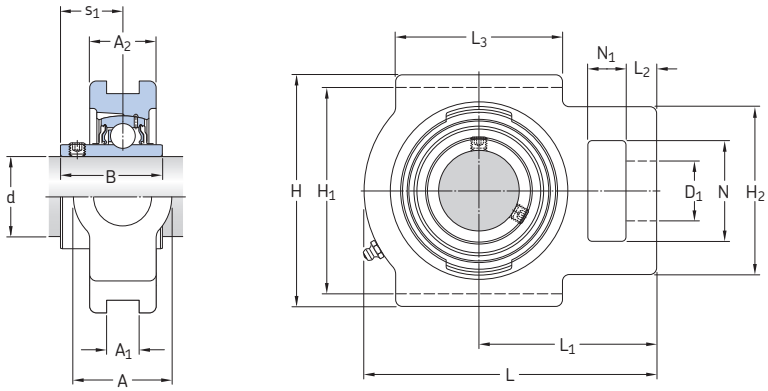

Dimensions																Designation Bearing unit
d	A	A_1	A_2	B	D_1	H	H_1	H_2	L	L_1	L_2	L_3	N	N_1	s_1	
in/*mm*																–
1 1/2	1.93	0.69	1.3	1.94	1.14	4.53	3.98	3.27	5.71	3.46	0.59	3.27	1.97	0.75	1.19	**TU 1.1/2 TF**
38,1	*49*	*17,5*	*33*	*49,2*	*29*	*115*	*101*	*83*	*145*	*88*	*15*	*83*	*50*	*19*	*30,2*	
1 11/16	1.93	0.69	1.38	1.94	1.14	4.61	3.98	3.27	5.67	3.43	0.59	3.27	1.93	0.75	1.19	**TU 1.11/16 TF**
42,863	*49*	*17,5*	*35*	*49,2*	*29*	*117*	*101*	*83*	*144*	*87*	*15*	*83*	*49*	*19*	*30,2*	
1 3/4	1.93	0.69	1.38	1.94	1.14	4.61	3.98	3.27	5.67	3.43	0.59	3.27	1.93	0.75	1.19	**TU 1.3/4 TF**
44,45	*49*	*17,5*	*35*	*49,2*	*29*	*117*	*101*	*83*	*144*	*87*	*15*	*83*	*49*	*19*	*30,2*	
1 15/16	1.93	0.69	1.42	2.03	1.14	4.61	3.98	3.27	5.87	3.54	0.63	3.39	1.93	0.75	1.28	**TU 1.15/16 TF**
49,213	*49*	*17,5*	*36*	*51,6*	*29*	*117*	*101*	*83*	*149*	*90*	*16*	*86*	*49*	*19*	*32,6*	
2	2.52	1.06	1.61	2.19	1.38	5.75	5.12	4.02	6.73	4.17	0.75	3.74	2.52	0.98	1.31	**TU 2. TF**
50,8	*64*	*27*	*41*	*55,6*	*35*	*146*	*130*	*102*	*171*	*106*	*19*	*95*	*64*	*25*	*33,4*	
2 3/16	2.52	1.06	1.61	2.19	1.38	5.75	5.12	4.02	6.73	4.17	0.75	3.74	2.52	0.98	1.31	**TU 2.3/16 TF**
55,563	*64*	*27*	*41*	*55,6*	*35*	*146*	*130*	*102*	*171*	*106*	*19*	*95*	*64*	*25*	*33,4*	

Designations Bearing unit	Separate components Housing	 Bearing	**Basic load ratings** dynamic C	 static C_0	**Fatigue load limit** P_u	**Limiting speed** with shaft tolerance h6	**Mass** Bearing unit
–			lbf/*kN*		lbf/*kN*	r/min	lb/*kg*
TU 1.1/2 TF	TU 508 M	YAR 208-108-2F	6 910 *30,7*	4 280 *19*	180 *0,8*	5 300	4.95 *2,25*
TU 1.11/16 TF	TU 509 U	YAR 209-111-2F	7 470 *33,2*	4 860 *21,6*	210 *0,915*	4 300	5.20 *2,35*
TU 1.3/4 TF	TU 509 U	YAR 209-112-2F	7 470 *33,2*	4 860 *21,6*	210 *0,915*	4 300	5.50 *2,50*
TU 1.15/16 TF	TU 510 U	YAR 210-115-2F	7 900 *35,1*	5 220 *23,2*	220 *0,98*	4 000	5.30 *2,40*
TU 2. TF	TU 511 M	YAR 211-200-2F	9 810 *43,6*	6 530 *29*	280 *1,25*	4 000	8.80 *4,00*
TU 2.3/16 TF	TU 511 U	YAR 211-203-2F	9 810 *43,6*	6 530 *29*	280 *1,25*	3 600	8.40 *3,80*

Y-bearing take-up units with a cast housing and an eccentric locking collar, metric shafts
d **20 – 55** mm

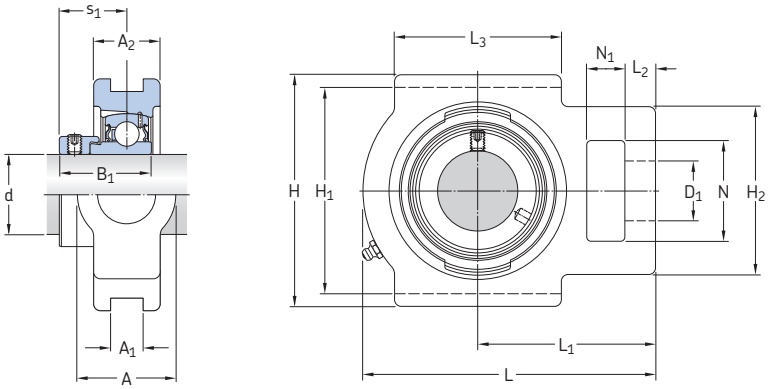

Dimensions																Designation Bearing unit
d	A	A_1	A_2	B_1	D_1	H	H_1	H_2	L	L_1	L_2	L_3	N	N_1	s_1	
mm																–
20	34	13,5	25	31	19	92	76	54	97	62	10	54	32	16	23,5	**TU 20 FM**
25	34	13,5	25	31	19	91	76	53	100	64	10	52	33	16	23,5	**TU 25 FM**
30	37	13,5	28	35,7	22	104	89	56	114	70	10	57	37	16	26,7	**TU 30 FM**
35	37	13,5	30	38,9	22	103	89	64	129	78	12	64	38	17	29,4	**TU 35 FM**
40	49	17,5	33	43,7	29	115	101	83	145	88	15	83	50	19	32,7	**TU 40 FM**
45	49	17,5	35	43,7	29	117	101	83	144	87	15	83	49	19	32,7	**TU 45 FM**
50	49	17,5	36	43,7	29	117	101	83	149	90	16	86	49	19	32,7	**TU 50 FM**
55	64	27	41	48,4	35	146	130	102	171	106	19	95	64	25	36,4	**TU 55 FM**

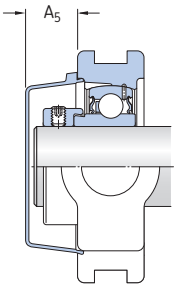

Designations Bearing unit	Separate components Housing	Bearing	**Basic load ratings** dynamic C	static C_0	**Fatigue load limit** P_u	**Limiting speed** with shaft tolerance h6	**Mass** Bearing unit	**Appropriate end cover** Designation	Dimension A_5
–			kN		kN	r/min	kg	–	mm
TU 20 FM	TU 504 M	YET 204	12,7	6,55	0,28	8 500	0,73	ECY 204	18,5
TU 25 FM	TU 505 M	YET 205	14	7,8	0,335	7 000	0,77	ECY 205	18
TU 30 FM	TU 506 M	YET 206	19,5	11,2	0,475	6 300	1,25	ECY 206	20
TU 35 FM	TU 507 M	YET 207	25,5	15,3	0,655	5 300	1,45	ECY 207	22
TU 40 FM	TU 508 M	YET 208	30,7	19	0,8	4 800	2,30	ECY 208	23,5
TU 45 FM	TU 509 M	YET 209	33,2	21,6	0,915	4 300	2,30	ECY 209	23
TU 50 FM	TU 510 M	YET 210	35,1	23,2	0,98	4 000	2,40	ECY 210	29,5
TU 55 FM	TU 511 M	YET 211	43,6	29	1,25	3 600	3,85	ECY 211	34


SKF
SKF

SKF ConCentra ball bearings and units

Design **249**

SKF ConCentra ball bearings and units (→ **fig. 1**) are part of SKF's extensive line of ready-to-install mounted products. SKF ConCentra ball bearings and units, with true concentric location on the shaft, are particularly well suited for applications where there are relatively high speeds and moderate loads and where vibration, low noise, and minimal maintenance are key operational parameters. SKF ConCentra ball bearings are available as single bearings or assembled with plummer block or flanged housings.

What sets the SKF ConCentra ball bearing unit apart from any other Y-bearing unit is its unique 360° locking mechanism. The locking mechanism is based on two mating surfaces, each with precision engineered inclined serrations. One set of serrations is machined into the bearing bore; the other set is machined into the outside diameter of the shaft sleeve. The shaft sleeve is also equipped with a mounting pressure ring (→ **fig. 2**).

The 360° grip on the shaft virtually eliminates the possibility of shaft damage and fretting corrosion.

By tightening the grub (set) screws in the mounting collar using the appropriate hexagonal key, the bearing inner ring is forced up the inclined planes of the stepped sleeve, thus providing a true concentric tight fit on the shaft (→ **fig. 3**).

In order to assist the mounting of SKF ConCentra ball bearing units, mounting kits are available from SKF (designation 626830) which include mounting instructions, hexagonal keys and torque indicators. Typical applications of SKF ConCentra ball bearings and units are industrial fans, conveyor systems, textile machines and agricultural machinery.

Fig. 1



Fig. 2

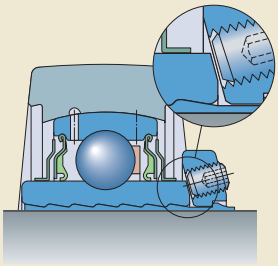

Fig. 3

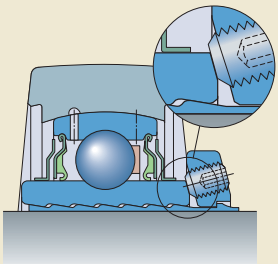

Design

SKF ConCentra ball bearing units are ready-to-mount and ready-to-operate. They are filled with a high-quality, long-lasting grease that provides maintenance-free operation in most cases. For operating conditions that make relubrication necessary, the units are provided with a grease fitting.

SKF ConCentra ball bearings and units are based on:

- SKF Y-bearings in the YSP 2 SB series
- the patented SKF ConCentra stepped sleeve
- cast iron housings in the SY 5(00) M, FY 5(00) M and FYTB 5(00) M series, SY 5(00) M, FY 5(00) M, FYTB 5(00) M series for metric shafts
- cast iron housings in the SY 5(00) U/AH, FY 5(00) U/AH, FYTB 5(00) U/AH series for inch shafts

Detailed information about these bearing units can be found in the publication *SKF ConCentra ball bearing units – true concentric locking, for fast and reliable mounting* and online at skf.com/bearings.



SKF Food Line Y-bearing units

Designs **252**

To meet the requirements of the food, beverage and pharmaceutical processing industries, SKF has developed a special range of Y-bearing units.

The housings for SKF Food Line Y-bearing units are made of three different materials:

- Composite with dedicated rugged design
- Cast stainless steel for heavy-duty applications
- Zinc-coated cast iron for a cost-effective solution

The units are equipped with Y-bearings made of stainless steel (YAR 2-2RF/HV series) or of high quality, carbon chromium steel with zinc coated inner and outer rings (YAR 2-2RF/VE495 series). The bearing inner rings are extended on both sides and are locked on the shaft with grub screws.

Fig. 1

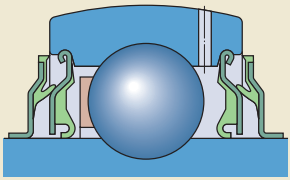

Fig. 2



The sealing arrangement, proven to be highly effective during washdowns, consists of a stainless steel supported, grease filled, multi-lip FDA approved synthetic rubber contacting and labyrinth seal with a stainless steel flinger. (→ **fig. 1**).

The SKF Food Line Y-bearing units are pre-lubricated for life with a non-toxic food-grade grease, based on a PAO oil and an aluminium-complex soap as a thickener (food industry approved NSF H1).

Designs

SKF Food Line Y-bearing units with composite housings

Strong, lightweight, chemical resistant

Capable of resisting citric acids, cooking fats and most food and beverage processing chemicals, composite SKF Food Line Y-bearing housings are made from a thermoplastic material that is lighter than cast iron housings. The housing's spherical bore accommodates the insert bearing's spherical outer surface, enabling the unit to compensate for initial misalignment.

Other performance advantages include:

- High fracture strength – dedicated rugged design contributes to its fracture strength. Radial breaking load is far greater than the static load rating of the bearing. SKF Food Line Y-bearing units are estimated to have the highest fracture strength of any composite unit on the market.
- Flush mounting – A polyamide filled housing base or a solid base allow the units to seat flush with the mounting surface. This surface-to-surface mounting eliminates gaps where contaminants could potentially collect.
- Stability – Stainless steel bolt-hole inserts provide added strength and stability to each housing foot.

Housing designs

SKF Food Line Y-bearing unit composite housings are available in the following designs (→ **fig. 2**):

- plummer block
- two- and four-bolt flange (oval or square shape)
- tapped base
- three-bolt bracket flange
- take-up

Bearing designs
SKF Food Line Y-bearing units with composite housings are available with Y-bearings made of stainless steel (YAR 2-2RF/HV series) or of high quality carbon chromium steel with zinc coated inner and outer rings (YAR 2-2RF/VE495 series).

SKF Food Line Y-bearing units with stainless steel housings

Extreme strength and toughness
For extremely challenging food and beverage applications requiring superior durability and chemical resistance, housings cast from AISI 300 stainless steel may be the best solution.

Strength – Y-bearing housings are designed for applications where very heavy loads or shock loads are possible.
Safety – In applications where housing failure could result in injury, the safety factor inherent in cast steel is an advantage.
Chemical resistance – Compared to composite and zinc coated cast iron housings, cast stainless steel offers a higher level of resistance to aggressive washdown chemicals. Cast stainless housings are not affected by strong concentrations of chlorine, hydrogen peroxide or other chemicals.
Smooth surfaces – The smooth surfaces of cast SKF stainless steel housings make them easier to clean.The bases are machined flat with no recesses to trap debris and bacteria, and the exposed surfaces have no unnecessary crevices or pockets.

Housing designs
Stainless steel SKF Food Line Y-bearing housings are available in the following designs (**→ fig. 2**):

- plummer block
- two- and four-bolt flange (oval or square shape)
- tapped base

Bearing designs
SKF Food Line Y-bearing units with stainless steel housings are available with Y-bearings made of stainless steel (YAR 2-2RF/HV series).

SKF Food Line Y-bearing units with coated cast iron housings

Strong and corrosion resistant
Strength, durability and long-term corrosion resistance make coated cast iron SKF housings an ideal choice for red meat, pork and poultry processing applications.

The heavy-duty cast iron is protected with a CrVI-free zinc coating on all housing surfaces for long-term corrosion resistance. The zinc coating eliminates the flaking problems associated with nickel plated products.

Chemical resistance – These zinc coated housings are resistant to the majority of common washdown solutions.

Housing designs
Coated cast iron SKF FL Y-bearing housings are available in the following designs:

- plummer blocks
- two- or four-bolt flange (oval or square shape)
- tapped base

Bearing designs
SKF Food Line Y-bearing units with coated cast iron housings are available with Y-bearings made of high quality carbon chromium steel with zinc coated inner and outer rings (YAR 2-2RF/VE495 series).

End covers

Secure fit, operator safety
To enhance worker safety, SKF recommends using end covers in any situation where a shaft protrudes from a housing and is not otherwise safely and adequately guarded. Special End Covers, types ECW and ECL, are available for all SKF Food Line Y-bearing units and must be ordered separately.

Detailed information about SKF end covers can be found in the publication *SKF Food Line Y-bearing units – a maintenance-free solution for wet, abrasive and contaminating environments* or in the product information available online at skf.com/bearings.


SKF
SKF

Product index

The product range listed in this catalogue includes almost 1 000 Y-bearings, Y-bearing units, Y-bearing housings, rubber seating rings, end covers and adapter sleeves. In order to enable the user to quickly find the technical data for a product known only by its designation, the products are listed by designation in alphanumerical order in this index. Each entry lists the page number on which the product can be found and gives a brief description of the product.

Designation	Product	Product table No.	Page
17262..	Y-bearing with a standard inner ring	2.4	108
17263..	Y-bearing with a standard inner ring	2.4	108
ECY 2..	End cover	3.1	120
	End cover	3.2	122
	End cover	3.3	134
	End cover	4.1	174
	End cover	4.2	176
	End cover	4.3	178
	End cover	4.4	188
	End cover	4.6	200
	End cover	4.7	208
	End cover	5.1	238
	End cover	5.2	244
FY .. FM	Flanged Y-bearing unit with a cast housing with a square flange and eccentric locking collar.	4.4	188
FY .. RM	Flanged Y-bearing unit with a cast housing with a square flange and grub screws	4.3	184
FY .. TF	Flanged Y-bearing unit with a cast housing with a square flange and grub screws	4.3	178
FY .. TR	Flanged Y-bearing unit with a cast housing with a square flange and grub screws	4.3	178
FY .. WF	Flanged Y-bearing unit with a cast housing with a square flange and eccentric locking collar.	4.4	188
FY 5.. M	Flanged housing with a square flange, cast iron	4.3	178
	Flanged housing with a square flange, cast iron	4.4	188
FY 5.. U	Flanged housing with a square flange, cast iron	4.3	182
	Flanged housing with a square flange, cast iron	4.4	190
FYC .. TF	Flanged Y-bearing unit with a cast housing with a round flange and grub screws.	4.9	218
FYC 5..	Flanged housing with a round flange, cast iron	4.9	218
FYJ .. KF	Flanged Y-bearing unit with a cast housing with a square flange and tapered bore	4.5	194
FYJ .. TF	Flanged Y-bearing unit with a cast housing with a square flange and grub screws	4.3	178
FYJ 5..	Flanged housing with a square flange, cast iron	4.3	178
	Flanged housing with a square flange, cast iron	4.5	194
FYK .. TF	Flanged Y-TECH unit with a housing with a square flange and grub screws	4.1	174
FYK .. TR	Flanged Y-TECH unit with a housing with a square flange and grub screws	4.1	174
FYK 5..	Flanged Y-TECH housing with a square flange, composite material	4.1	174
FYM .. TF	Flanged Y-bearing unit with a cast housing with a square flange and grub screws	4.3	184
FYT .. FM	Flanged Y-bearing unit with a cast housing with an oval flange and eccentric locking collar	4.7	210
FYT .. RM	Flanged Y-bearing unit with a cast housing with an oval flange and grub screws	4.6	202
FYT .. TF	Flanged Y-bearing unit with a cast housing with an oval flange and grub screws	4.6	202
FYT 5.. U	Flanged housing with an oval flange, cast iron.	4.6	202
	Flanged housing with an oval flange, cast iron.	4.7	210
FYTB .. FM	Flanged Y-bearing unit with a cast housing with an oval flange and eccentric locking collar	4.7	208
FYTB .. TF	Flanged Y-bearing unit with a cast housing with an oval flange and grub screws	4.6	200
FYTB .. TR	Flanged Y-bearing unit with a cast housing with an oval flange and grub screws	4.6	200
FYTB .. WF	Flanged Y-bearing unit with a cast housing with an oval flange and eccentric locking collar	4.7	208
FYTB 5.. M	Flanged housing with an oval flange, cast iron.	4.6	200
	Flanged housing with an oval flange, cast iron.	4.7	208
FYTBK .. TF	Flanged Y-TECH unit with a housing with an oval flange and grub screws	4.2	176
FYTBK .. TR	Flanged Y-TECH unit with a housing with an oval flange and grub screws	4.2	176
FYTBK 5..	Flanged Y-TECH housing with an oval flange	4.2	176
FYTJ .. KF	Flanged Y-bearing unit with a cast housing with an oval flange and adapter sleeve	4.8	214
FYTJ .. TF	Flanged Y-bearing unit with a cast housing with an oval flange and grub screws	4.6	200
FYTJ 5..	Flanged housing with an oval flange, cast iron.	4.6	200
	Flanged housing with an oval flange, cast iron.	4.8	214

Designation	Product	Product table No.	Page
H 23 ..	Adapter sleeve	3.4	142
	Adapter sleeve	4.5	194
	Adapter sleeve	4.8	214
HA 23 ..	Adapter sleeve	3.4	144
	Adapter sleeve	4.5	196
	Adapter sleeve	4.8	216
HE 23 ..	Adapter sleeve	3.4	144
	Adapter sleeve	4.5	196
	Adapter sleeve	4.8	216
HE 23 .. B	Adapter sleeve	3.4	144
HS 23 ..	Adapter sleeve	3.4	144
	Adapter sleeve	4.5	196
P .. FM	Y-bearing plummer block unit with a pressed steel housing and eccentric locking collar	3.8	158
P .. RM	Y-bearing plummer block unit with a pressed steel housing and grub screws	3.7	152
P .. TF	Y-bearing plummer block unit with a pressed steel housing and grub screws	3.7	152
P .. TR	Y-bearing plummer block unit with a pressed steel housing and grub screws	3.7	152
P .. WF	Y-bearing plummer block unit with a pressed steel housing and eccentric locking collar	3.8	158
P ..	Plummer block housing, pressed steel	3.7	152
	Plummer block housing, pressed steel	3.8	158
PF .. FM	Flanged Y-bearing unit with a pressed steel housing with a round flange and eccentric locking collar	4.11	228
PF .. RM	Flanged Y-bearing unit with a pressed steel housing with a round flange and grub screws	4.10	220
PF .. TF	Flanged Y-bearing unit with a pressed steel housing with a round flange and grub screws	4.10	220
PF .. TR	Flanged Y-bearing unit with a pressed steel housing with a round flange and grub screws	4.10	220
PF .. WF	Flanged Y-bearing unit with a pressed steel housing with a round flange and eccentric locking collar	4.11	228
PF ..	Flanged housing with a round flange, pressed steel	4.10	220
	Flanged housing with a round flange, pressed steel	4.11	228
PFD .. FM	Flanged Y-bearing unit with a pressed steel housing with a triangular flange and eccentric locking collar	4.11	228
PFD .. RM	Flanged Y-bearing unit with a pressed steel housing with a triangular flange and grub screws	4.10	220
PFD .. TF	Flanged Y-bearing unit with a pressed steel housing with a triangular flange and grub screws	4.10	220
PFD .. TR	Flanged Y-bearing unit with a pressed steel housing with a triangular flange and grub screws	4.10	220
PFD .. WF	Flanged Y-bearing unit with a pressed steel housing with a triangular flange and eccentric locking collar	4.11	228
PFD ..	Flanged housing with a triangular flange, pressed steel	4.10	220
	Flanged housing with a triangular flange, pressed steel	4.11	228
PFT .. FM	Flanged Y-bearing unit with a pressed steel housing with an oval flange and eccentric locking collar	4.11	228
PFT .. RM	Flanged Y-bearing unit with a pressed steel housing with an oval flange and grub screws	4.10	220
PFT .. TF	Flanged Y-bearing unit with a pressed steel housing with an oval flange and grub screws	4.10	220
PFT .. TR	Flanged Y-bearing unit with a pressed steel housing with an oval flange and grub screws	4.10	220
PFT .. WF	Flanged Y-bearing unit with a pressed steel housing with an oval flange and eccentric locking collar	4.11	228
PFT ..	Flanged housing with an oval flange, pressed steel	4.10	220
	Flanged housing with an oval flange, pressed steel	4.11	228
RIS 2..	Rubber seating ring	3.7	152
	Rubber seating ring	3.8	158
SY .. FM	Y-bearing plummer block unit with a cast housing and eccentric locking collar	3.3	134
SY .. TF	Y-bearing plummer block unit with a cast housing and grub screws	3.2	122
SY .. TR	Y-bearing plummer block unit with a cast housing and grub screws	3.2	122
SY .. WF	Y-bearing plummer block unit with a cast housing and eccentric locking collar	3.3	134
SY 5.. M	Plummer block housing, cast iron	3.2	122
	Plummer block housing, cast iron	3.3	134
SY 5.. U	Plummer block housing, cast iron	3.2	126
	Plummer block housing, cast iron	3.3	136
SYF .. FM	Y-bearing plummer block unit with a cast housing and eccentric locking collar	3.6	150
SYF .. TF	Y-bearing plummer block unit with a cast housing and grub screws	3.5	148
SYF 5..	Plummer block housing, short base, cast iron	3.5	148
	Plummer block housing, short base, cast iron	3.6	150
SYFJ .. TF	Y-bearing plummer block unit with a cast housing and grub screws	3.5	148
SYFJ 5..	Plummer block housing, short base, cast iron	3.5	148

Designation	Product	Product table No.	Page
SYH .. FM	Y-bearing plummer block unit with a cast housing and eccentric locking collar	3.3	136
SYH .. TF	Y-bearing plummer block unit with a cast housing and grub screws	3.2	126
SYH .. WF	Y-bearing plummer block unit with a cast housing and eccentric locking collar	3.3	136
SYH 5.. U	Plummer block housing, cast iron	3.2	126
	Plummer block housing, cast iron	3.3	136
SYJ .. KF	Y-bearing plummer block unit with a cast housing and tapered bore	3.4	142
SYJ .. TF	Y-bearing plummer block unit with a cast housing and grub screws	3.2	122
SYJ 5..	Plummer block housing, cast iron	3.2	122
	Plummer block housing, cast iron	3.4	142
SYK .. TF	Y-TECH plummer block unit with grub screws	3.1	120
SYK .. TR	Y-TECH plummer block unit with grub screws	3.1	120
SYK 5..	Y-TECH plummer block housing	3.1	120
SYM .. TF	Y-bearing plummer block unit for air handling systems with a cast housing and grub screws	3.2	128
SYM 5.. U	Plummer block housing, cast iron	3.2	128
TU .. FM	Y-bearing take-up unit with a cast housing and eccentric locking collar	5.2	244
TU .. TF	Y-bearing take-up unit with a cast housing and grub screws	5.1	238
TU 5.. M	Take-up housing, cast iron	5.1	238
	Take-up housing, cast iron	5.2	244
TU 5.. U	Take-up housing, cast iron	5.1	240
TUJ .. TF	Y-bearing take-up unit with a cast housing and grub screws	5.1	238
TUJ 5..	Take-up housing, cast iron	5.1	238
YAR 2.. -2F	Y-bearing with grub screws	2.1	92
YAR 2.. -2RF	Y-bearing with grub screws	2.1	92
YAR 2.. -2RF/HV	Stainless steel Y-bearing with grub screws	2.1	92
YAR 2.. -2RF/VE495	Y-bearing with grub screws for the food industry	2.1	92
YAT 2..	Y-bearings with grub screws	2.1	92
YEL 2.. -2F	Y-bearing with eccentric locking collar	2.2	100
YEL 2.. -2RF	Y-bearing with eccentric locking collar, rubberized flinger	2.2	100
YET 2..	Y-bearing with eccentric locking collar	2.2	100
YSA 2.. -2FK	Y-bearing with a tapered bore	2.3	104



skf.com