II5973

Inductive sensor with IO-Link

IIK3012BFRKG/IO/US-104

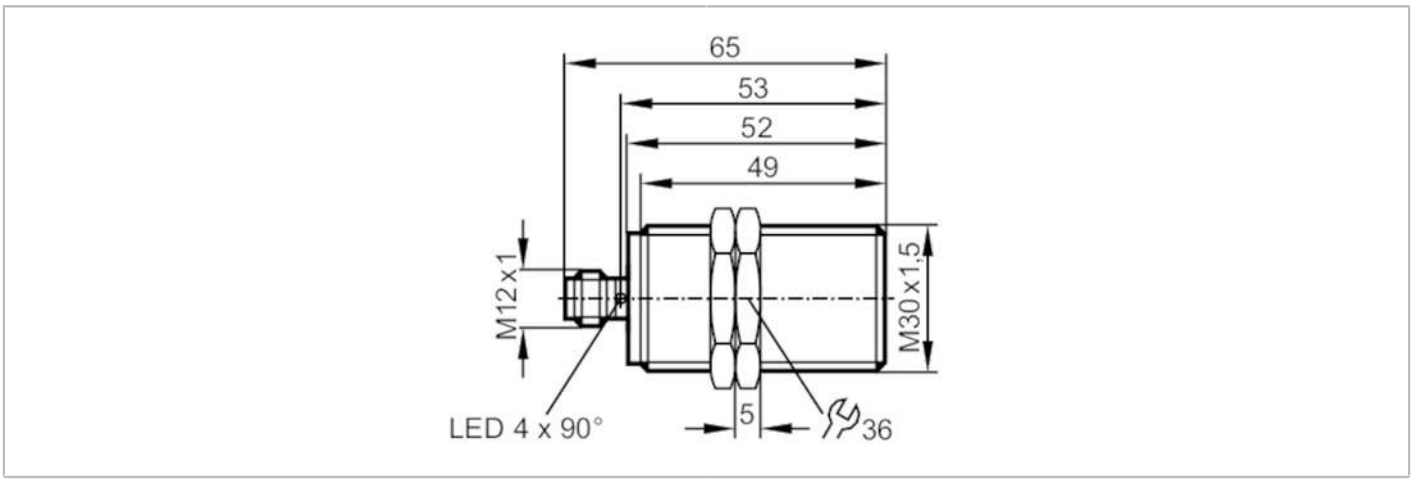

Made in Germany

Electrical data		
Operating voltage	[V]	10...30 DC
Current consumption	[mA]	10
Protection class		III
Reverse polarity protection		yes
Outputs		
Output function		normally open / normally closed; (selectable)
Max. voltage drop switching output DC	[V]	2.5
Permanent current rating of switching output DC	[mA]	100
Switching frequency DC	[Hz]	100
Electrical design		PNP/NPN
Short-circuit protection		yes
Overload protection		yes
Range		
Measuring range	[mm]	1.3...13
Accuracy / deviations		
Correction factor		steel: 1 / stainless steel: 0.8 / brass: 0.5 / aluminium: 0.5 / copper: 0.4
Hysteresis	[% of Sr]	3...15
Linearity error of analogue output	[%]	± 2 %; (of the final value of the measuring range)
Repeatability analogue output	[%]	± 1 %; (of the final value of the measuring range)
Temperature coefficient		± 10 %; (-25...70 °C ± 20 %, -40...85 °C; of the final value of the measuring range)

II5973

Inductive sensor with IO-Link

IIK3012BFRKG/IO/US-104

Interfaces		
Communication interface		IO-Link
Transmission type		COM2 (38,4 kBaud)
IO-Link revision		1.1
SDCI standard		IEC 61131-9 CDV
IO-Link device ID		791d / 000317h
Profiles		Smart Sensor: Device Identification; Device Diagnosis; Device Teach Channel; Binary Data Channel; Process Data Variable
SIO mode		yes
Required master port type		A
Min. process cycle time	[ms]	3
Operating conditions		
Ambient temperature	[°C]	-40...85
Protection		IP 65; IP 66; IP 67; IP 68; IP 69K
Tests / approvals		
EMC	EN 61000-4-2 ESD	4 kV CD / 8 kV AD
	EN 61000-4-3 HF radiated	10 V/m
	EN 61000-4-4 Burst	2 kV
	EN 61000-4-6 HF conducted	10 V
	EN 55011	class B
Vibration resistance	EN 60068-2-6 Fc	20 g (10...3000 Hz) / 50 sweep cycles per frequency; 1 octave per minute in 3 axes
Shock resistance	EN 60068-2-27 Ea	100 g 11 ms half-sine; 3 shocks each in every direction of the 3 coordinate axes
Continuous shock resistance	EN 60068-2-29 Eb	40 g 6 ms; 4000 shocks each in every direction of the 3 coordinate axes
Fast temperature changes	EN 60068-2-14 Na	TA = -40 °C; TB = 85 °C; t1 = 30 min; t2 = < 10 s; 50 cycles
MTTF	[years]	664
UL Approval no.		A008
Mechanical data		
Weight	[g]	121.8
Housing		threaded type
Mounting		flush mountable
Dimensions	[mm]	M30 x 1.5 / L = 65
Thread designation		M30 x 1.5
Materials		brass white bronze coated; sensing face: PBT orange; LED window: PEI; lock nuts: brass white bronze coated
Displays / operating elements		
Display	switching status	4 x LED, yellow
	SIO mode	
	output stage supplied with current	LED, yellow lights
	IO-Link mode	
	target in measuring range	LED, yellow lights
	target outside measuring range	LED, yellow flashing
Accessories		
Accessories (supplied)		lock nuts: 2

II5973

Inductive sensor with IO-Link

IIK3012BFRKG/IO/US-104

Remarks	
Pack quantity	1 pcs.

Electrical connection

Connector: 1 x M12

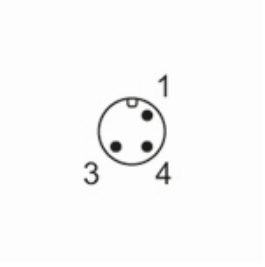

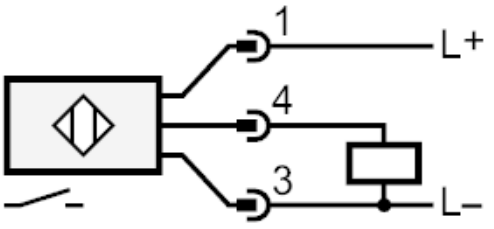

4: OUT / IO-Link