Part Number: BU-46PR-*
Description: Insulator for Miniature Plier-Type Clip

3107

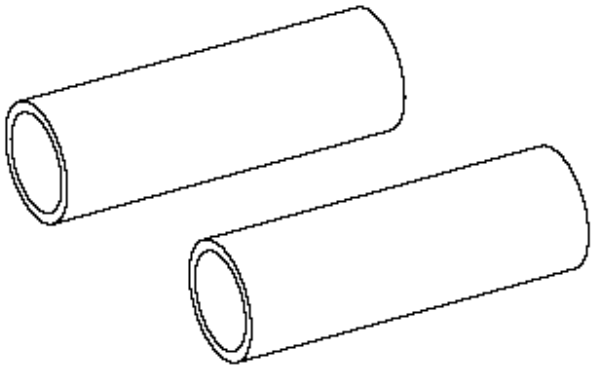

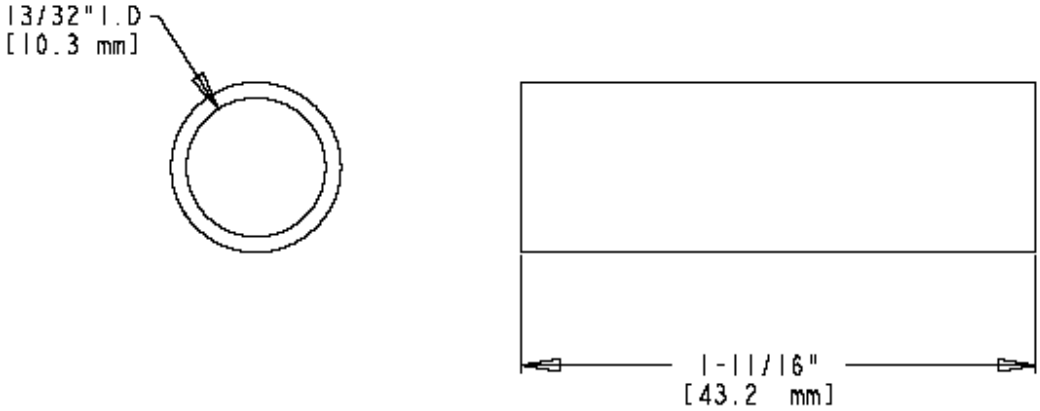

- Insulator for Miniature Plier-Type Clip
- Protective flexible vinyl insulator for BU-46
- Material: PVC
- Length: 1.7” (43.18 mm)
- *Std. Colors: -0 Black, -2 Red
- RoHS Compliant

Mueller Electric Company
1625 E. 31st Street
Cleveland, Ohio 44114

ISO 9001:2000
Over 95 Years Of Innovation
www.muellerelectric.com

TEL. 800-955-2629
TEL. 216-771-5225
FAX. 216-771-3068