# Protistor® size 14x51 gR

690VAC (IEC) / 700VAC (UL)

**SEMICONDUCTOR PROTECTION FUSES**

## IEC HIGH-SPEED CYLINDRICAL FUSE-LINKS AC PROTECTION



These Protistor® size 14x51 have been designed to protect power semi conductors, complying with standard IEC 60269-1 and -4. They are extremely high interrupting rating fuses: 690VAC, with large band of ratings (current rating 1 to 63A).

Two models are existing: with or without trip-indicator.

## TECHNICAL DATA OVERVIEW

| | |
|---|---|
| Ampere Range (A) | 1 ... 63 A |
| Size per Standard | 14x51 |
| Speed/Characteristic | gR |
| I.R. AC (IEC) | 160 kA |
| I.R. AC (UL) | 200 kA |
| I.R. DC (UL) | 50 kA |
| Rated voltage AC (IEC) | 690 V |
| Rated voltage AC (UL) | 700 V |
| Rated voltage DC (UL) | 500 V |

## FEATURES & BENEFITS

- IEC standard 60269-4 compliant
- UL 248-13 compliant
- gR class
- Clearing all overloads
- Improved safety and protection
- Enabling selective coordination among all
- Distribution circuit fuses
- With or without trip-indicator

## STANDARDS

- IEC 60269-4
- UL Recognized
- UL 248-13
- CCC GB 1539.4
- RoHS compliant

MERSEN reserves the right to change, update or correct, without notice, any information contained in this datasheet.

## PRODUCT RANGE

### CP 14x51 gR with striker

| Catalog number | Reference number | Rated voltage AC (IEC) | Rated current $I_n$ | Pre-arcing $I^2t$ | Clearing $I^2t$ at Rated Voltage | Power dissipation at In | Weight | Package |
|---|---|---|---|---|---|---|---|---|
| FR14GR69V2T | D1017178 | 690 V | 2 A | 0.9 A²s | 1.8 A²s | 1.75 W | 20 g | 10 |
| FR14GR69V4T | E1017179 | 690 V | 4 A | 6.7 A²s | 13 A²s | 2.9 W | 20 g | 10 |
| FR14GR69V6T | F1017180 | 690 V | 6 A | 8 A²s | 35 A²s | 2 W | 20 g | 10 |
| FR14GR69V8T | G1017181 | 690 V | 8 A | 4.3 A²s | 40 A²s | 2.25 W | 20 g | 10 |
| FR14GR69V10T | H1017182 | 690 V | 10 A | 4.3 A²s | 45 A²s | 2.95 W | 20 g | 10 |
| FR14GR69V12T | J1017183 | 690 V | 12 A | 5.4 A²s | 60 A²s | 4.1 W | 20 g | 10 |
| FR14GR69V16T | K1017184 | 690 V | 16 A | 13.1 A²s | 125 A²s | 4.65 W | 20 g | 10 |
| FR14GR69V20T | L1017185 | 690 V | 20 A | 26.8 A²s | 230 A²s | 4.8 W | 20 g | 10 |
| FR14GR69V25T | M1017186 | 690 V | 25 A | 52.5 A²s | 385 A²s | 5.95 W | 20 g | 10 |
| FR14GR69V32T | Q1017189 | 690 V | 32 A | 96.7 A²s | 700 A²s | 6.9 W | 20 g | 10 |
| FR14GR69V40T | S1017191 | 690 V | 40 A | 210 A²s | 1050 A²s | 7.5 W | 20 g | 10 |
| FR14GR69V50T | T1017192 | 690 V | 50 A | 387 A²s | 2250 A²s | 8.75 W | 20 g | 10 |
| FR14GR69V63T | V1017193 | 690 V | 63 A | 617 A²s | 2900 A²s | 12.5 W | 20 g | 10 |



FR14GR69V63

### CP 14x51 gR without striker

| Catalog number | Reference number | Rated voltage AC (IEC) | Rated current $I_n$ | Pre-arcing $I^2t$ | Clearing $I^2t$ at Rated Voltage | Power dissipation at In | Weight | Package |
|---|---|---|---|---|---|---|---|---|
| FR14GR69V1 | X1017195 | 690 V | 1 A | 0.2 A²s | 0.3 A²s | 1.15 W | 20 g | 10 |
| FR14GR69V2 | Y1017196 | 690 V | 2 A | 0.9 A²s | 1.8 A²s | 1.75 W | 20 g | 10 |
| FR14GR69V4 | Z1017197 | 690 V | 4 A | 6.7 A²s | 13 A²s | 2.9 W | 20 g | 10 |
| FR14GR69V6 | A1017198 | 690 V | 6 A | 8 A²s | 35 A²s | 2 W | 20 g | 10 |
| FR14GR69V8 | B1017199 | 690 V | 8 A | 4.3 A²s | 40 A²s | 2.25 W | 20 g | 10 |
| FR14GR69V10 | C1017200 | 690 V | 10 A | 4.3 A²s | 45 A²s | 2.95 W | 20 g | 10 |
| FR14GR69V12 | D1017201 | 690 V | 12 A | 5.4 A²s | 60 A²s | 4.1 W | 20 g | 10 |
| FR14GR69V16 | E1017202 | 690 V | 16 A | 13.1 A²s | 125 A²s | 4.65 W | 20 g | 10 |
| FR14GR69V20 | F1017203 | 690 V | 20 A | 26.8 A²s | 230 A²s | 4.8 W | 20 g | 10 |
| FR14GR69V25 | G1017204 | 690 V | 25 A | 52.5 A²s | 385 A²s | 5.95 W | 20 g | 10 |
| FR14GR69V32 | H1017205 | 690 V | 32 A | 96.7 A²s | 700 A²s | 6.9 W | 20 g | 10 |
| FR14GR69V40 | J1017206 | 690 V | 40 A | 210 A²s | 1050 A²s | 7.5 W | 20 g | 10 |
| FR14GR69V50 | K1017207 | 690 V | 50 A | 387 A²s | 2250 A²s | 8.75 W | 20 g | 10 |
| FR14GR69V63 | L1017208 | 690 V | 63 A | 617 A²s | 2900 A²s | 12.5 W | 20 g | 10 |

MERSEN reserves the right to change, update or correct, without notice, any information contained in this datasheet.

## TIME CURRENT CHARACTERISTIC CURVES

### Size 14x51 gR 1-6A

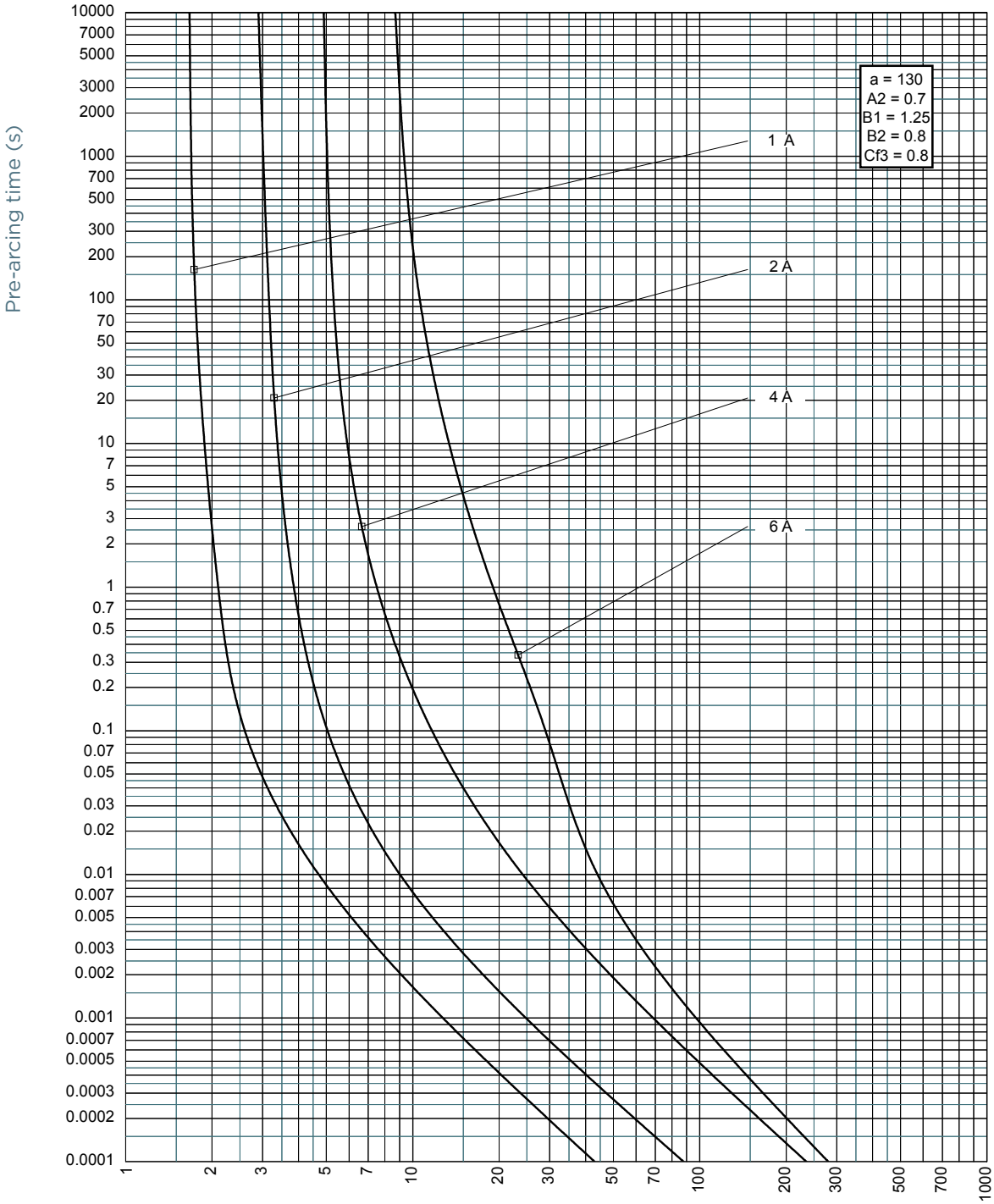


MERSEN reserves the right to change, update or correct, without notice, any information contained in this datasheet.

## TIME CURRENT CHARACTERISTIC CURVES

### Size 14x51 gR 8-63A

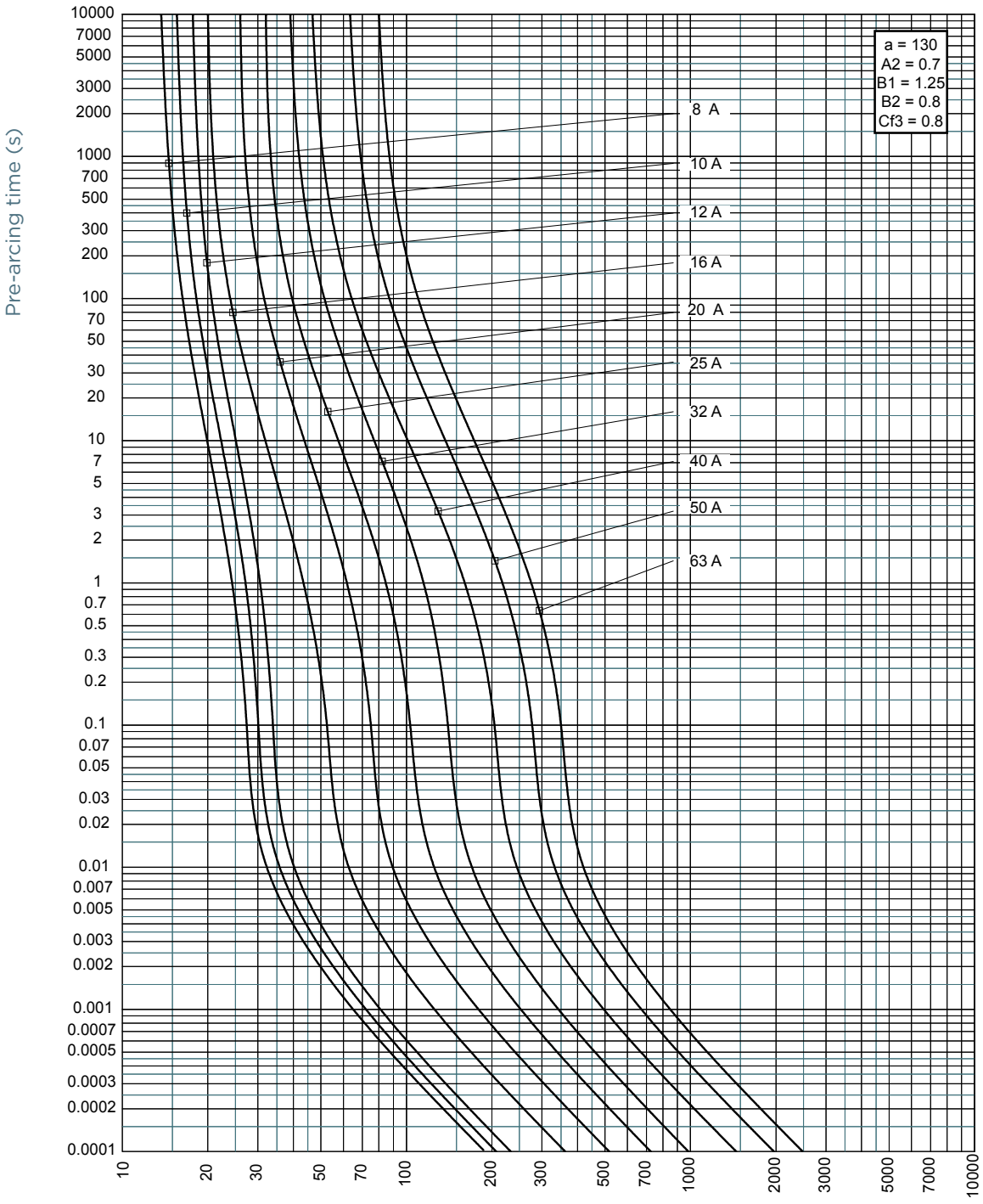


MERSEN reserves the right to change, update or correct, without notice, any information contained in this datasheet.

## CUT-OFF CURRENT CHARACTERISTIC

### Size 14x51 gR 1-6A

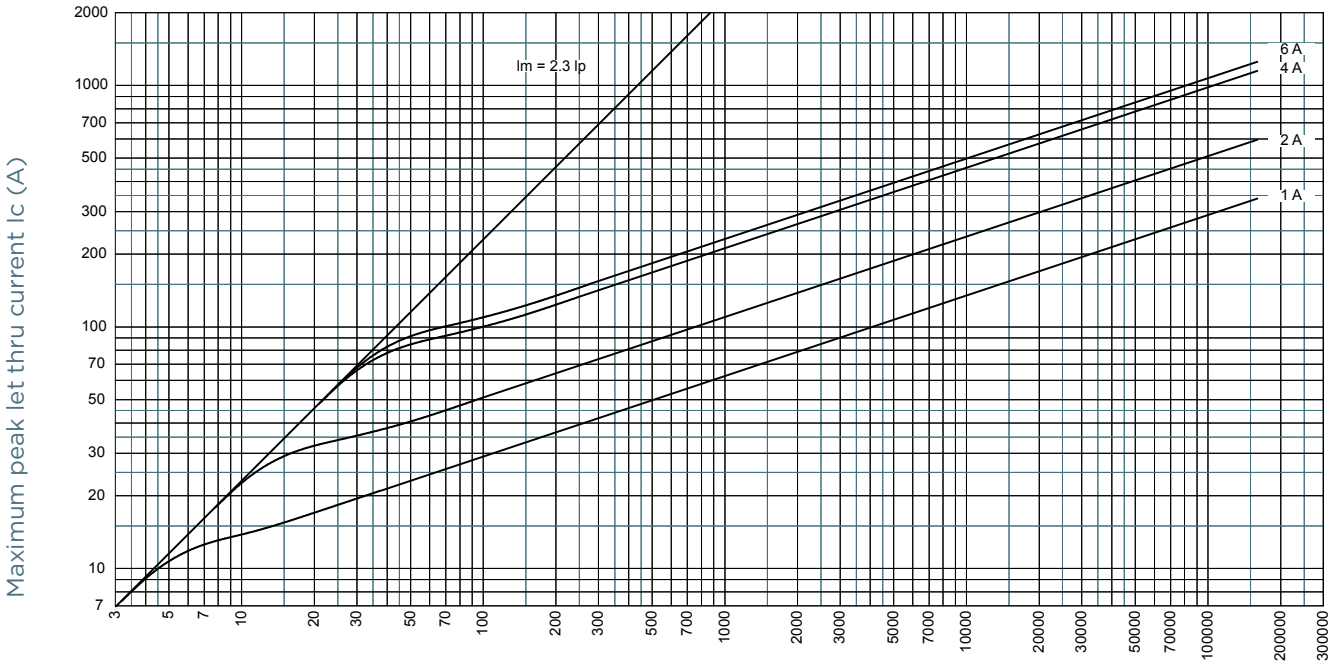


### Size 14x51 gR 8-63A

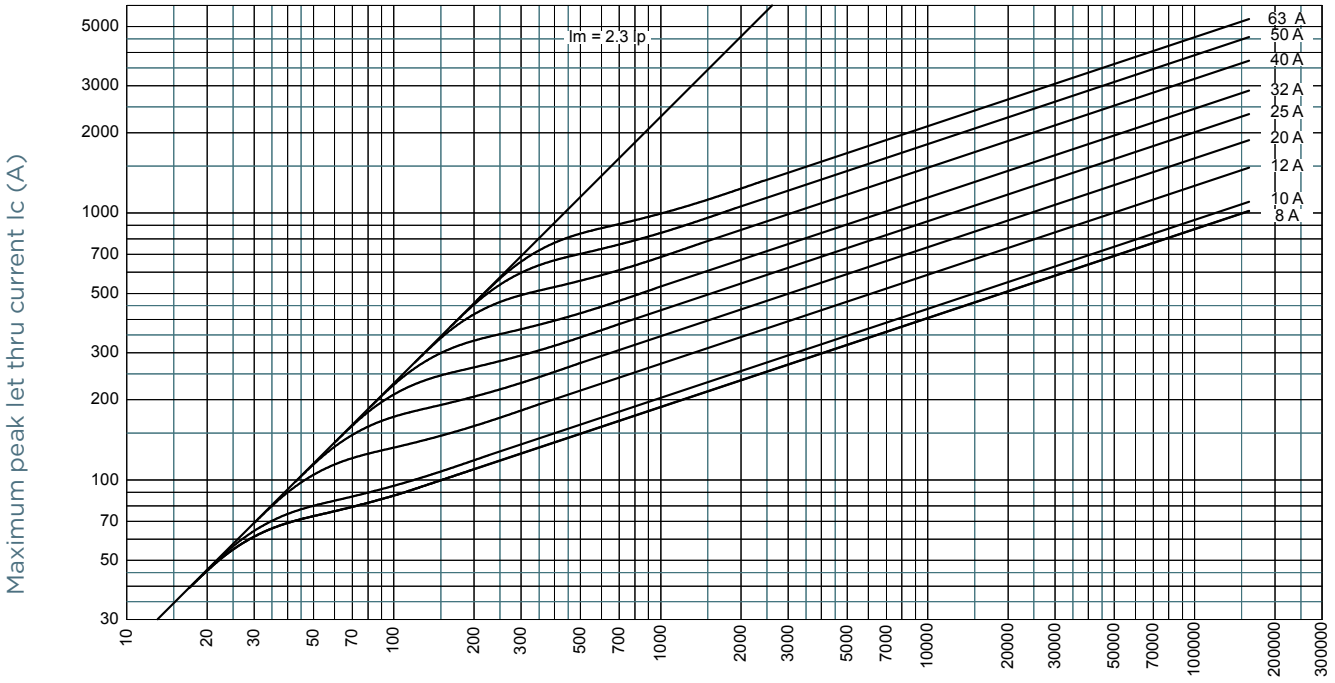


MERSEN reserves the right to change, update or correct, without notice, any information contained in this datasheet.

## $I^2T$ MULTIPLIER COEFFICIENT

### Size 14x51 gR 1-6A

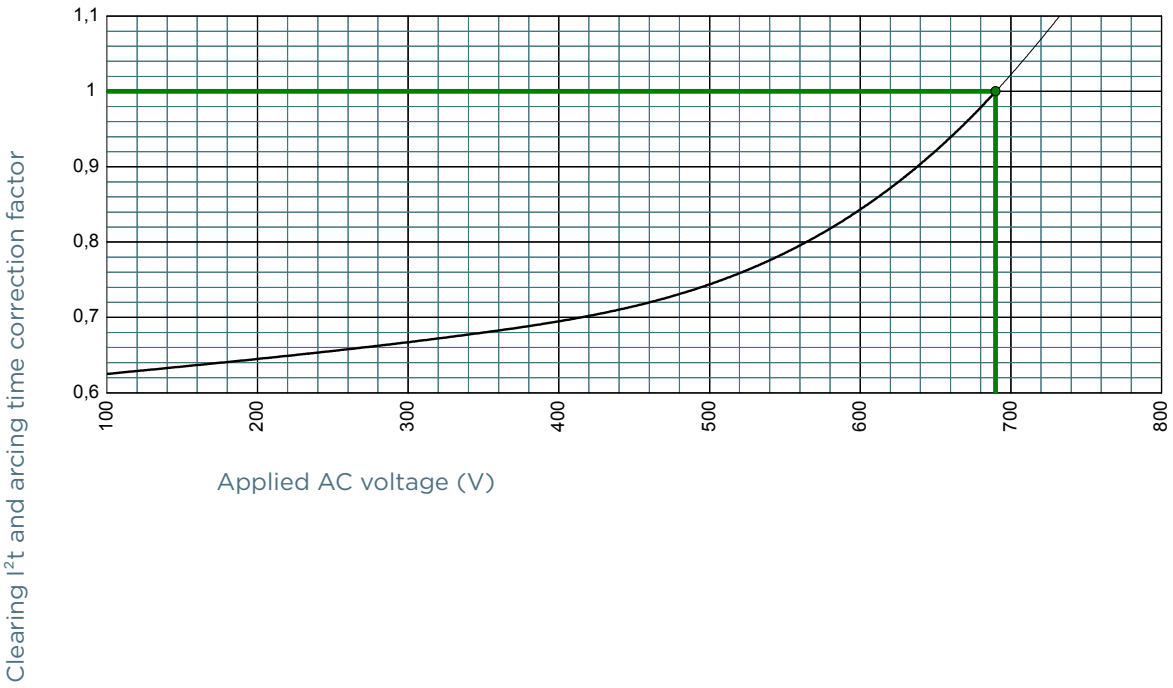


### Size 14x51 gR 8-63A

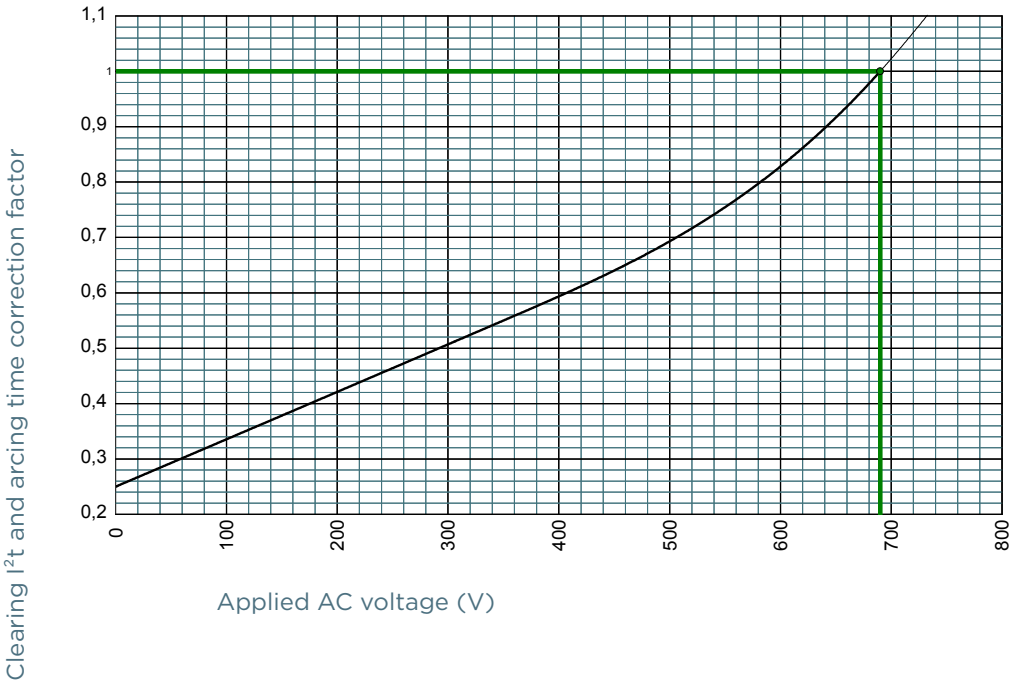


MERSEN reserves the right to change, update or correct, without notice, any information contained in this datasheet.

## CHARACTERISTICS TOTAL $I^2T$ CURVE

**Size 14x51 gR 1-6A**

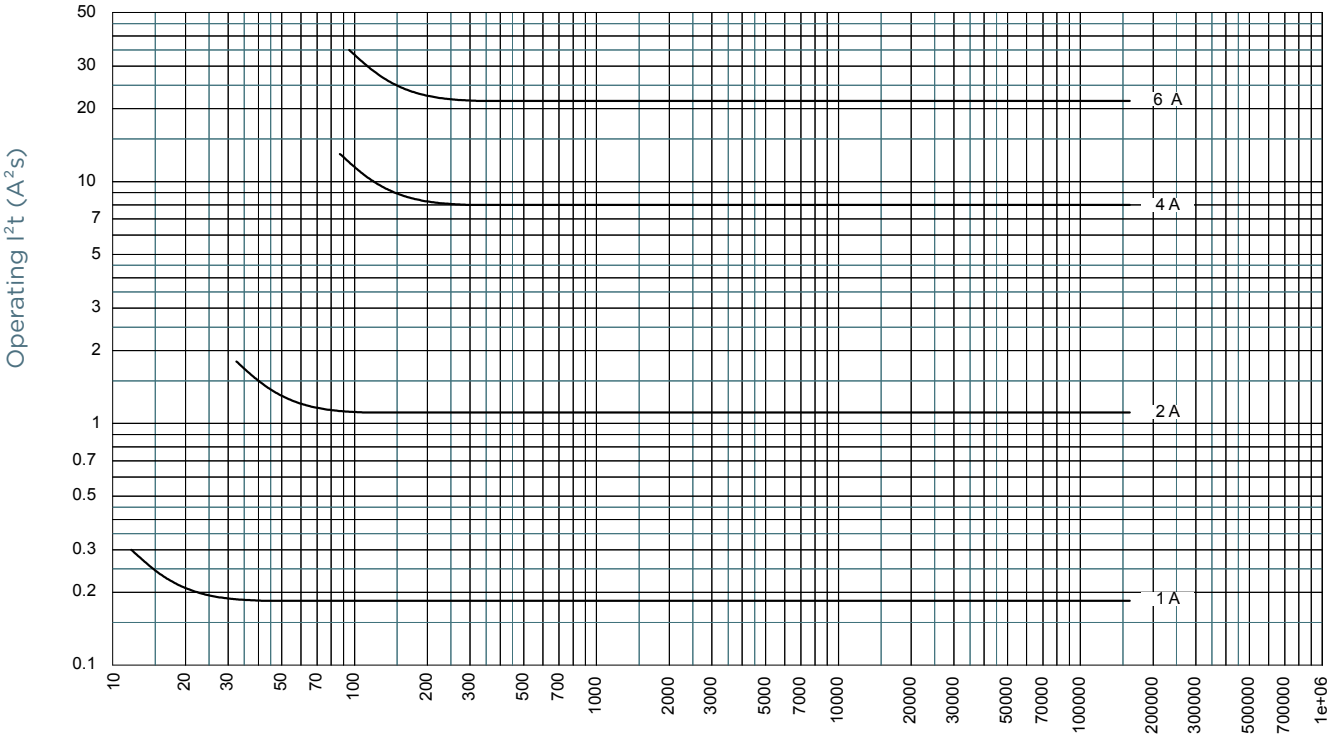


MERSEN reserves the right to change, update or correct, without notice, any information contained in this datasheet.

## CHARACTERISTICS TOTAL $I^2T$ CURVE

**Size 14x51 gR 8-63A**

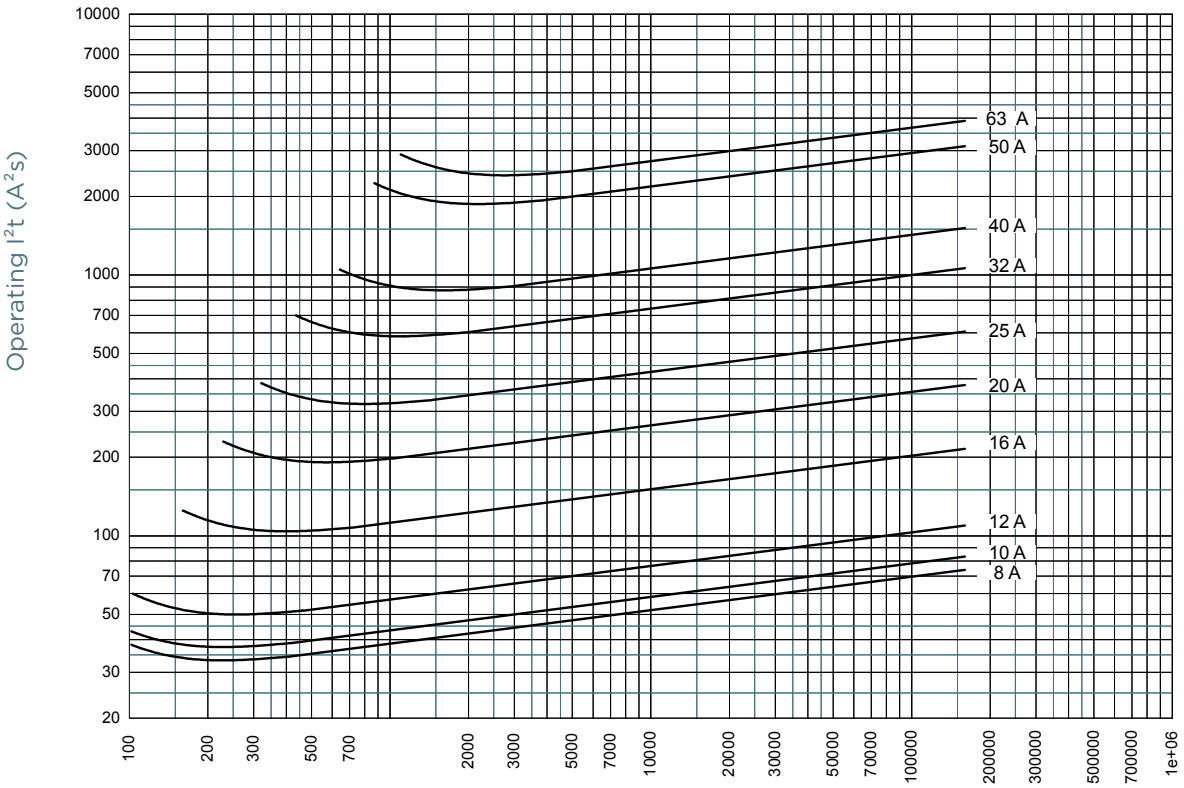


MERSEN reserves the right to change, update or correct, without notice, any information contained in this datasheet.

## POWER DISSIPATION

### Size 14x51 gR 1-6A

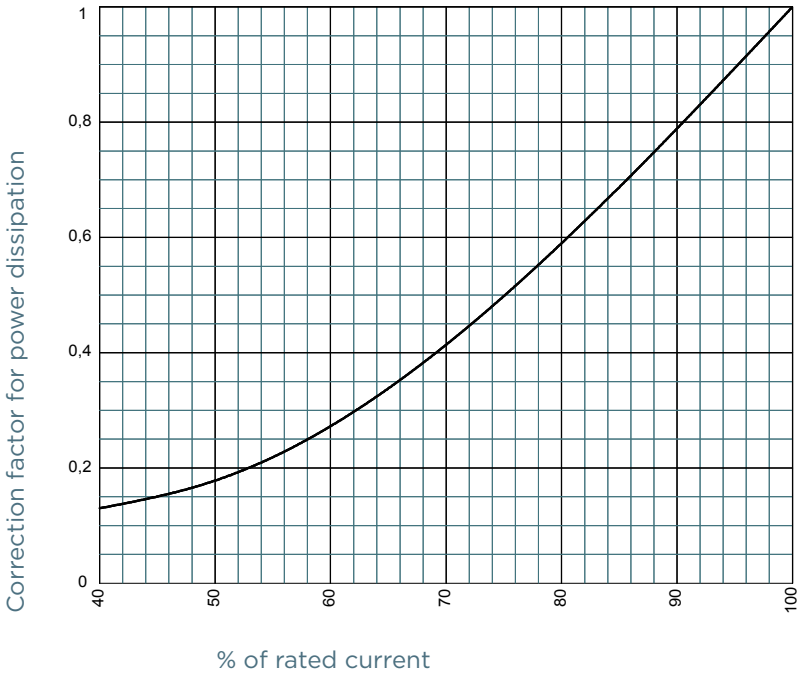


### Size 14x51 gR 8-63A

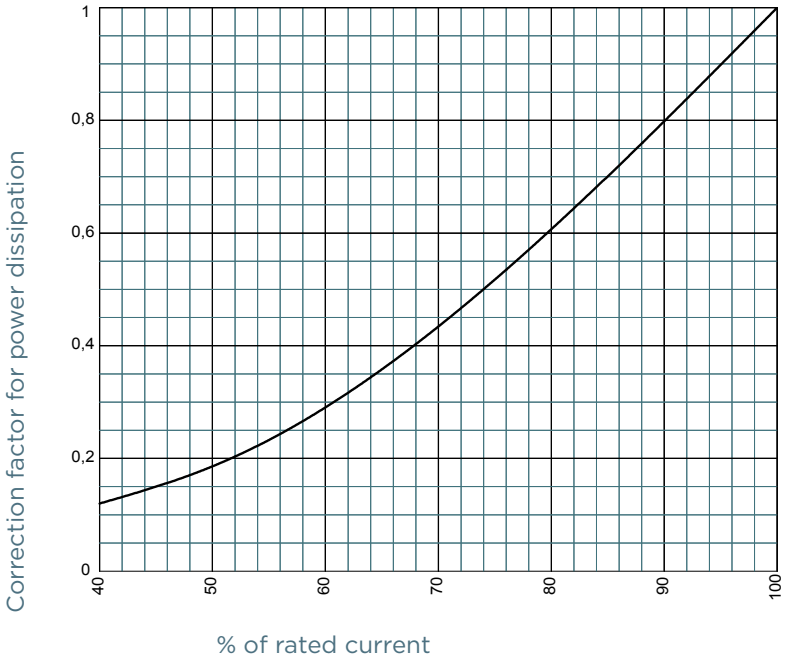


MERSEN reserves the right to change, update or correct, without notice, any information contained in this datasheet.

## DIMENSIONS

**CP 14x51 gR with striker** (100211)

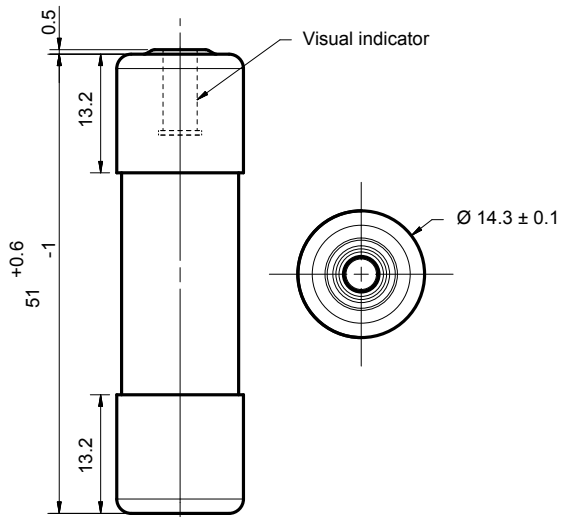


Dimensions in mm

**CP 14x51 gR without striker** (100212)

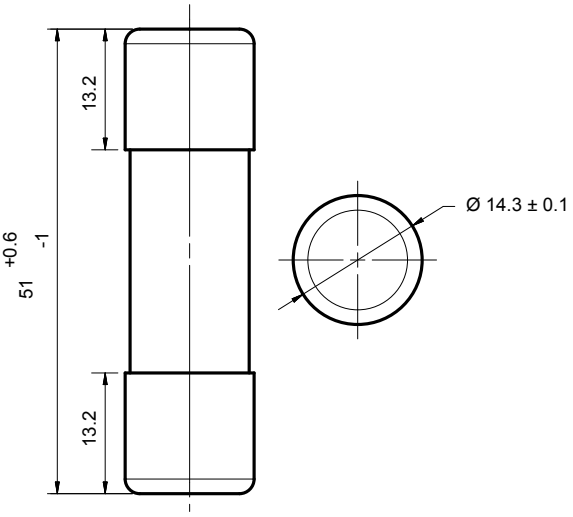


Dimensions in mm

MERSEN reserves the right to change, update or correct, without notice, any information contained in this datasheet.