ELECTRICAL/MECHANICAL **BUZZERS**



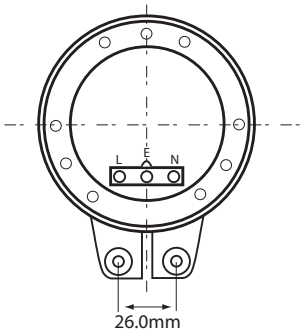

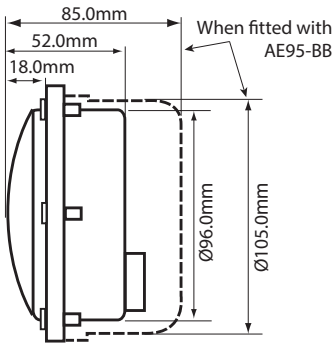

Acoustic Signals Industrial Buzzers > **AE95 Series**

Product overview

The AE95 are electrical/mechanical buzzers suitable for a wide range of signalling applications where a low frequency and penetrating sound is required.

Typical applications would be for industrial (stop/start & time signalling etc) & automotive applications (reversing alarm/forklift truck etc)

The units offer a single stage alarm, once energised an electromagnet causes the diaphragm to vibrate creating a unique acoustic tone.

They can also be pulsed via a remote source (ie control panel/plc etc) to give an intermittent signal if required.

This version of the AE95 comes complete with a weatherproof back box that allows for termination inside the enclosure. A weatherproof cable gland is supplied as standard.

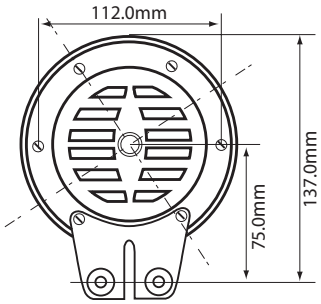

Features

- Rugged construction
- Wide voltage range
- These units are rated 15 mins On max / 1 min Off minimum
- Suitable for 2 point automotive fix and Weatherproof when fitted with AE95-BB back box
- Dustproof

Material

Powder Coated Mild Steel

AE95 Series > Ordering Information

Code No:	Voltage:	Frequency:	Current:
AE95-07	24/48v Ac/Dc⎓	420 Hz	0.8 A
AE95-08	115/230v Ac/Dc⎓	420 Hz	0.4/0.2 A

Kg 0.68 | 50/60 **Hz** | **°C** -30+60 | **IP** 65 | **dB** 111 | ON 15 MINS OFF 1 MINS

MARINE | INDUSTRIAL

APPROVALS and CONFORMITIES

RoHS