EUROSENSOR

# ETP - AM - SP - 100 - PT TEMPERATURE PROBE



- **Cost effective standard model**
- **Robust and compact design**
- **Fast response time**
- **Wide environmental temperature range**

The ETP-AM-SP-100-PT temperature probe provides a cost-effective measurement solution where heat, dust and moisture are prevalent and where a compact and robust high-reliability design is required. The sensor is particularly suitable for demanding temperature monitoring applications on vehicles but with its fast response time and wide environmental temperature range, it is equally well-equipped for measurement of liquids and gases used in medical equipment, test machinery, industrial instrumentation and process control systems.

| Specifications | | |
|---|---|---|
| Element: | PT100B | PT1000A |
| Accuracy: | ± (0.3 K + 0,005 x \|t\|) | ± (0.15 K + 0,002 x \|t\|) |
| Working temperature: | -55°...+180 °C, short term 230 °C | |
| Environmental temperature: | -55°...+150°C | |
| Sealing: | IP67 | |
| Response time in still water t90: | 7 s | |
| Recommended applied current (self-heating must be considered) | 1 mA at 100 Ω<br>0.3 mA at 1000 Ω | |
| Housing: | 316 stainless steel | |
| Cable: | FEP 4 core AWG24, tinned copper shield, 3.2 mm OD | |
| Heat shrink: | Elastomer | |

## Dimensions and Wiring

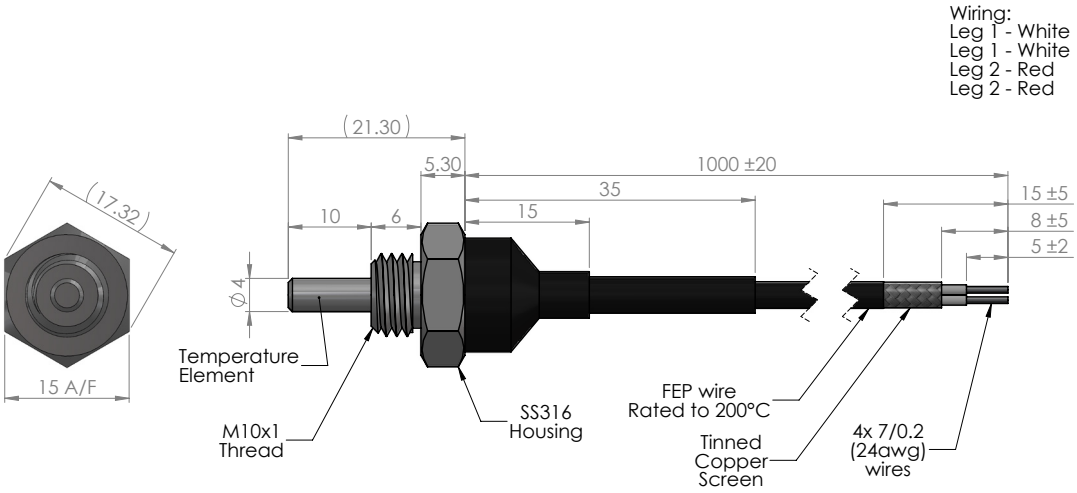


**Order Code** 93629-ETP-AM-SP-100-PT100B
93637-ETP-AM-SP-100-PT1000A