MX5051

Speed sensor

MXD41,7-BPKG/H/ZH

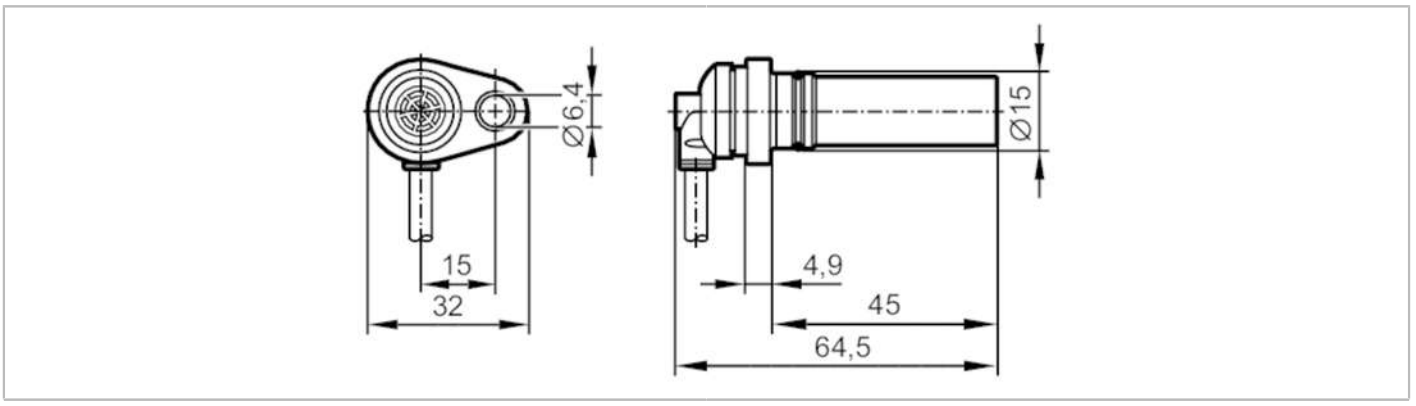

Product characteristics		
Electrical design		PNP
Output function		normally open
Sensing range	[mm]	1.7; (Using toothed wheels with a different modulus has an influence on the sensing range and the phase position.)
Dimensions	[mm]	Ø 15 / L = 64.5
Application		
Operating principle		Hall sensor
Electrical data		
Operating voltage	[V]	10...30 DC
Current consumption	[mA]	< 40
Protection class		III
Reverse polarity protection		yes
Outputs		
Electrical design		PNP
Output function		normally open
Max. voltage drop switching output DC	[V]	1
Max. leakage current	[mA]	0.1
Permanent current rating of switching output DC	[mA]	50
Short-time current rating of switching output	[mA]	50
Switching frequency DC	[Hz]	1...15000
Short-circuit protection		yes
Overload protection		yes
Detection zone		
Sensing range	[mm]	1.7; (Using toothed wheels with a different modulus has an influence on the sensing range and the phase position.)
Real sensing range Sr	[mm]	1.7 ± 10 %
Operating distance	[mm]	1.38
Operating conditions		
Ambient temperature	[°C]	-32...85

MX5051

Speed sensor

MXD41,7-BPKG/H/ZH

Protection		IP 65; IP 68; IP 69K	
Tests / approvals			
EMC		EN 61000-4-2	4 kV CD / 8 kV AD
		EN 61000-4-3	10 V/m
		EN 61000-4-4	2 kV
		EN 61000-4-6	10 V/m
		EN 61000-4-8	30 A/m
		EN 55011	0 class B
Shock resistance		DIN EN 60068-2-27	30 g 11 ms half-sine; 3 shocks each in every direction of the 3 coordinate axes
Fast temperature change		EN 60068-2-14 Na	TA = -10 °C; TB = 70°C; t1 = 60 min; t2 = < 10 s; 20 cycles
Salt spray test		EN 60068-2-52 Kb	severity level 5 (4 test cycles)
MTTF	[years]	3718	
Mechanical data			
Weight	[g]	86.5	
Dimensions	[mm]	Ø 15 / L = 64.5	
Materials		brass; PA; O-ring: FKM	
Tightening torque	[Nm]	7	
Toothed wheel module	[mm]	1.25	
Installation length	[mm]	45	
Remarks			
Pack quantity		1 pcs.	

Electrical connection

Cable: 2 m, PUR

Connection

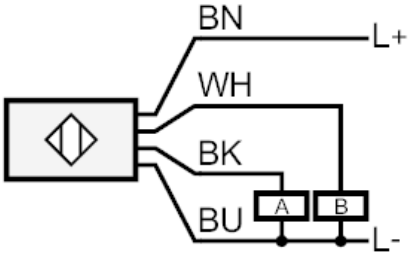

MX5051

Speed sensor

MXD41,7-BPKG/H/ZH

Diagrams and graphs

switching signals

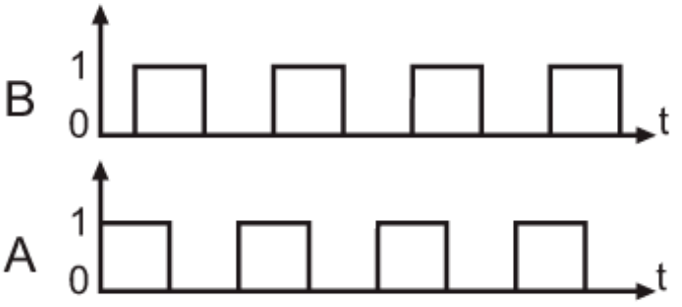

phase shift 90° +/- 20°

pulse/pause ratio 50 % +/- 10 %

Using toothed wheels with a different modulus has an influence on the sensing range and the phase position.