TABLE 1

MOLEX P/N	ENG. NO.	LED
1202510073	BKB8010-FBB	NO
1202510074	BKB801P-FBB	YES
1202510075	BKB801N-FBB	YES

TABLE 2 BILL OF MATERIAL

ITEM	DESCRIPTION	MATERIAL	FINISH
1	LABEL	ABS	WHITE
2	SHELL	BRASS	NICKEL PLATED
3	CONTACT	BRASS	GOLD OVER NICKEL
4	CONTACT	BRONZE	GOLD OVER NICKEL
5	O-RING	FPM	RED
6	LED	NO LED = PA	BLACK
		WITH LED = PA	TRANSPARENT
7	SHELL	BRASS	NICKEL PLATED
8	HOUSING	PBT	BLACK

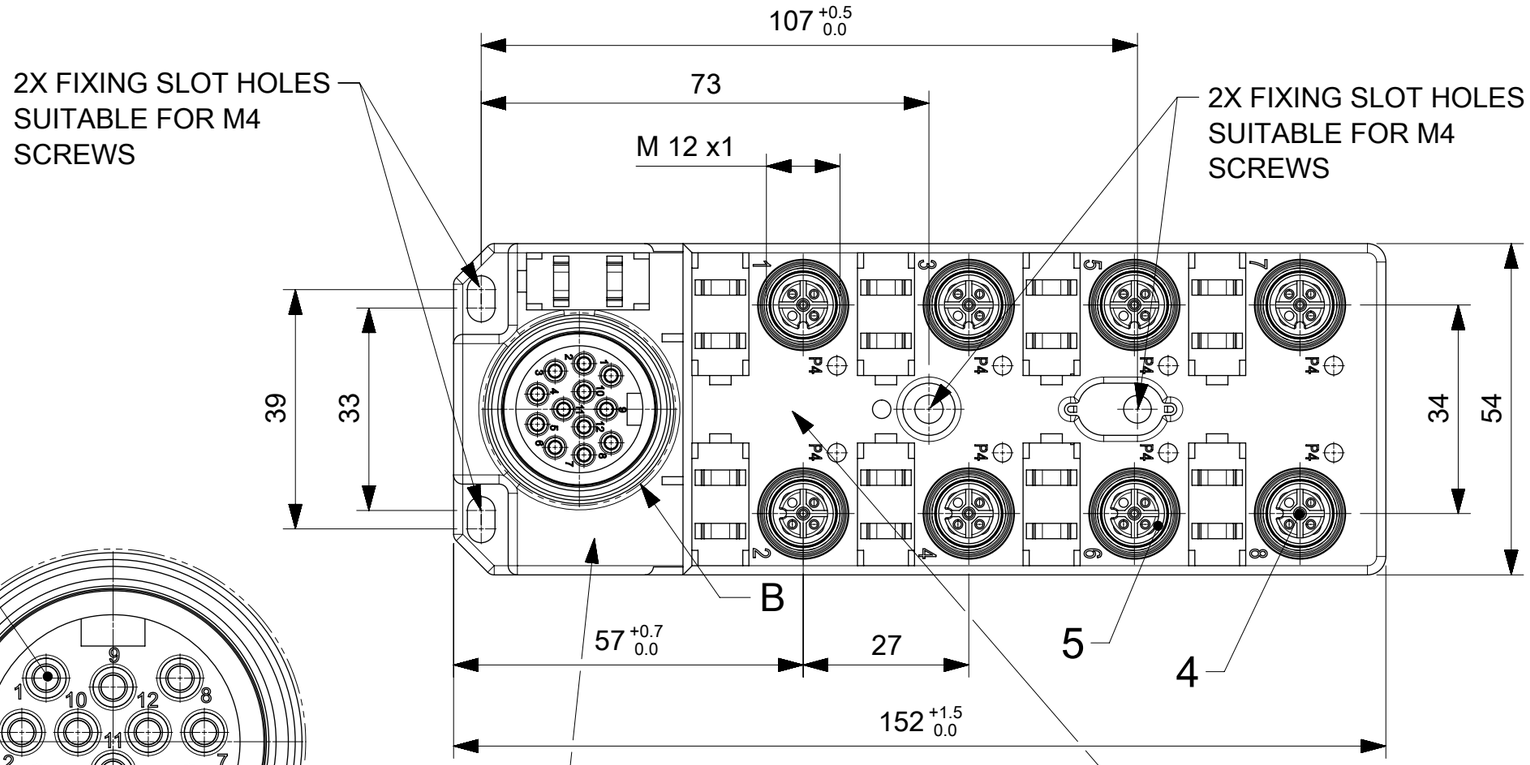

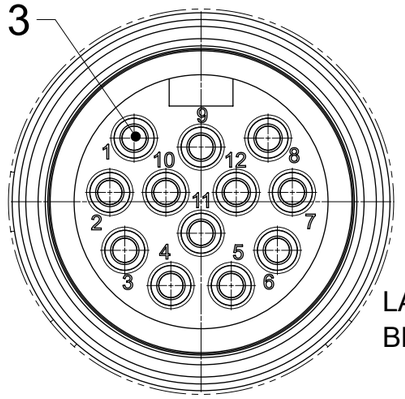

DETAIL B
SCALE 2:1
NOTE - PIN 12 NOT USED

SCALE 1:1

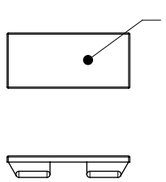

LABEL
9x packed in a bag

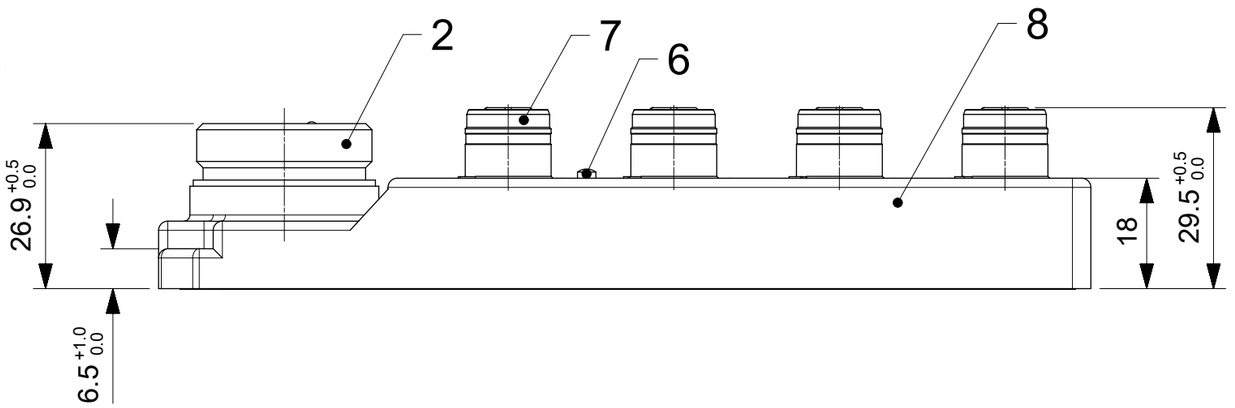

GENERAL CHARACTERISTICS:

ELECTRICAL AND MECHANICAL DATA ACC. TO IEC 61076-2-101

NOMINAL VOLTAGE:	10-30 V DC
AMPERE RATING:	4 A PER PORT / 12 A MAX
AMPERE RATING WITH UL REGISTRATION:	3 A PER PORT / 9 A MAX
IP DEGREE OF PROTECTION:	IP 67
TEMPERATURE RANGE:	-25°C to + 85°C

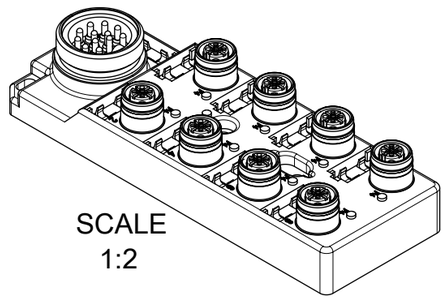

SCALE
1:2

DOCUMENT STATUS	P1	RELEASE DATE	2020/01/17 08:23:49

FORMAT: master-lb-prod-A3
REVISION: H
DATE: 2018/01/18

SYMBOLS
E V = 0
E C = 0
E B = 0
S = 0
▼ = 0
C = 0
☒ = 0
■ = 0
▽ = 0

DIMENSION UNITS	SCALE
mm	1:1

GENERAL TOLERANCES (UNLESS SPECIFIED)

ANGULAR TOL	±	1.0 °
4 PLACES	±	
3 PLACES	±	
2 PLACES	±	0.05
1 PLACE	±	0.3
0 PLACES	±	0.5

DRAFT WHERE APPLICABLE MUST REMAIN WITHIN DIMENSIONS

THIS DRAWING CONTAINS INFORMATION THAT IS PROPRIETARY TO MOLEX ELECTRONIC TECHNOLOGIES, LLC AND SHOULD NOT BE USED WITHOUT WRITTEN PERMISSION

CURRENT REV DESC:

EC NO: 630686
DRWN: SSM 2018/12/14
CHK'D: RSILLER 2020/01/17
APPR: RSILLER 2020/01/17

INITIAL REVISION:
DRWN: SSM 2018/12/14
APPR: RSILLER 2020/01/17

THIRD ANGLE PROJECTION | DRAWING: A3-SIZE | SERIES: 120251

molex

MPIS U12 NON 4P 8PT MINI CHANGE BK SINGL

PRODUCT CUSTOMER DRAWING

DOCUMENT NUMBER	DOC TYPE	DOC PART	REVISION
1202510073	PSD	000	A

MATERIAL NUMBER	CUSTOMER	SHEET NUMBER
SEE TABLE 1	GENERAL MARKET	1 OF 2

Wiring Diagram NON LED

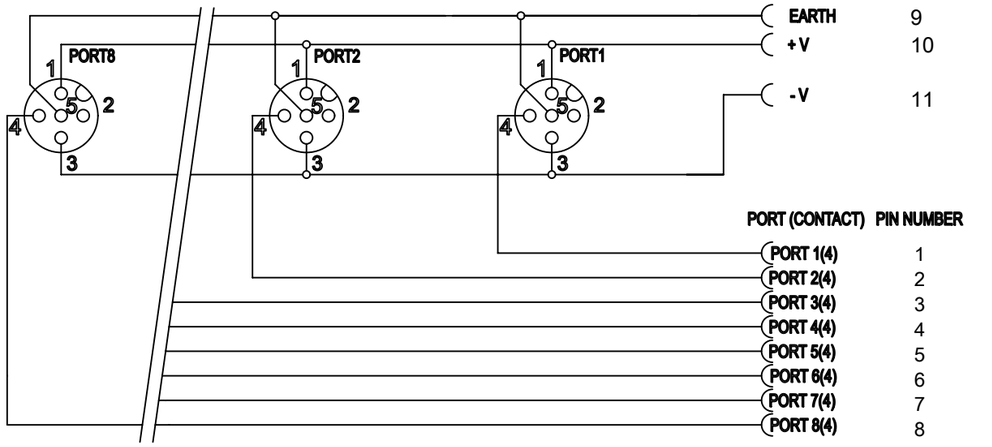

Wiring Diagram PNP

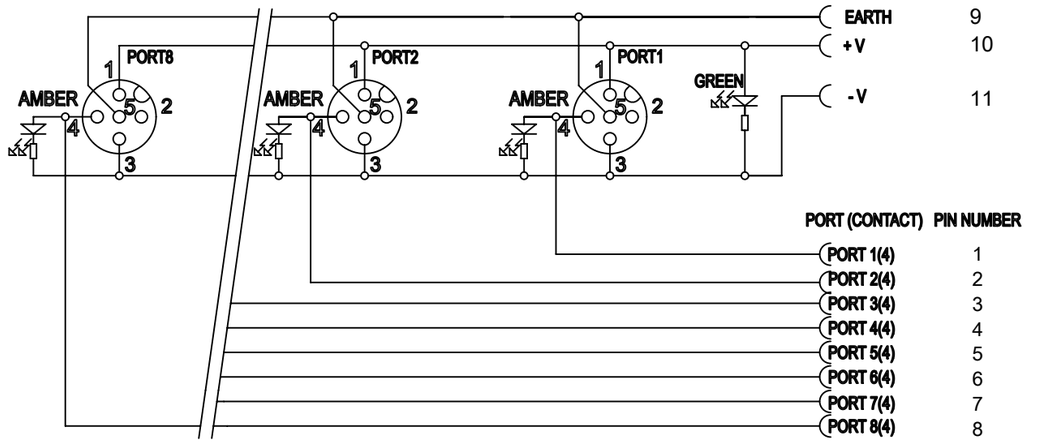

Wiring Diagram NPN

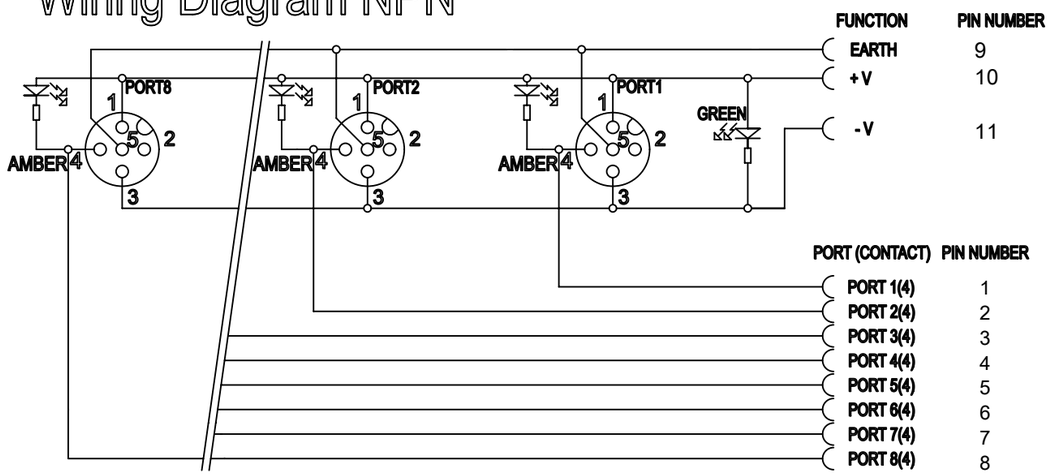

THIS DRAWING CONTAINS INFORMATION THAT IS PROPRIETARY TO MOLEX ELECTRONIC TECHNOLOGIES, LLC AND SHOULD NOT BE USED WITHOUT WRITTEN PERMISSION

SYMBOLS	DIMENSION UNITS	SCALE
= 0	mm	1:1
= 0	GENERAL TOLERANCES (UNLESS SPECIFIED)	
= 0	ANGULAR TOL ± 1.0 °	
= 0	4 PLACES ±	
= 0	3 PLACES ±	
= 0	2 PLACES ± 0.05	
= 0	1 PLACE ± 0.3	
= 0	0 PLACES ± 0.5	
= 0	DRAFT WHERE APPLICABLE MUST REMAIN WITHIN DIMENSIONS	
= 0		

CURRENT REV DESC:

EC NO: 630686
DRWN: SSM 2018/12/14
CHK'D: RSILLER 2020/01/17
APPR: RSILLER 2020/01/17

INITIAL REVISION:
DRWN: SSM 2018/12/14
APPR: RSILLER 2020/01/17

THIRD ANGLE PROJECTION | DRAWING: A3-SIZE | SERIES: 120251

molex

MPIS U12 NON 4P 8PT MINI CHANGE BK SINGL

PRODUCT CUSTOMER DRAWING

DOCUMENT NUMBER	DOC TYPE	DOC PART	REVISION
1202510073	PSD	000	A

MATERIAL NUMBER	CUSTOMER	SHEET NUMBER
SEE TABLE 1	GENERAL MARKET	2 OF 2

DOCUMENT STATUS	P1	RELEASE DATE	2020/01/17 08:23:49

FORMAT: master-tb-prod-A3
REVISION: H
DATE: 2018/01/18