# ELECTRO PNEUMATIC INTERFACES

Ø 4-6 mm ext.fittings connection

**3/2-4/2**
Series
**302-304**

## FEATURES

- *This interface will change an electric signal to a pneumatic signal with one or two outputs.*
- *Made up of modular joinable elements with 3/2 normally closed or 4/2 functions. The equipment can be fitted on standard symmetrical DIN rail* (3)



**3/2 (NC) MODULE**

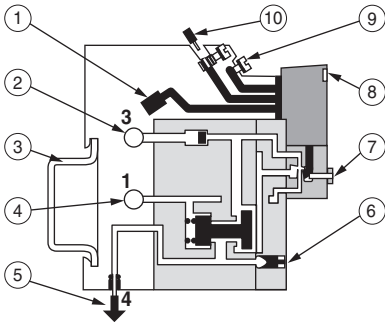


(1) Common supply tag
(2) Common exhaust
(3) Standard symmetrical DIN rail
(4) Common supply pressure
(5) Pneumatic signal
(6) Visual indication
(7) Manual override
(8) Visual indication of electric signal
(9) Earth
(10) Electric signal : - supply (A1)
- neutral (A2)

3/2 (NC) MODULE

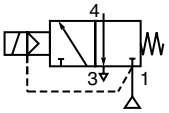


4/2 MODULE

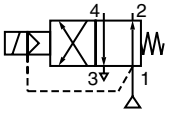


## GENERAL

| | |
|---|---|
| **Fluid** | Air or neutral gas filtered, lubricated or not |
| **Operating pressure** | 3 to 8 bar |
| **Ambient temperature** | - 10°C to + 40°C |
| **Flow (Qv at 6.3 bar)** | 154 l/min( ANR) - Kv : 2.2 |
| **Assembly** | On joinable subbases which can be mounted on DIN rail EN 50022 |
| **Solenoid valve** | 3/2 normally closed mini solenoid valve with low electrical consumption |

## ELECTRICAL CHARACTERISTICS

| | voltage (V) | consumption | insulation class | protection degree | electrical connection |
|---|---|---|---|---|---|
| ~ | 24 - 115 - 230 | 1,6 VA | H | IP 65 | • Solenoid valve plugs into the module<br>• Common electric wire<br>• Screw terminals (**IP20**) |
| = | 12 - 24 | 1,3 W | | | |

## ASSEMBLY

Interface 3/2 - 4/2 = Common subbase for 3/2 and 4/2 function (for Ø 4 mm O.D. tube) + Common subbase for 3/2 and 4/2 function (for Ø 6 mm O.D. tube) + Pneumatic module 3/2 NC or 4/2 + Solenoid Pilot

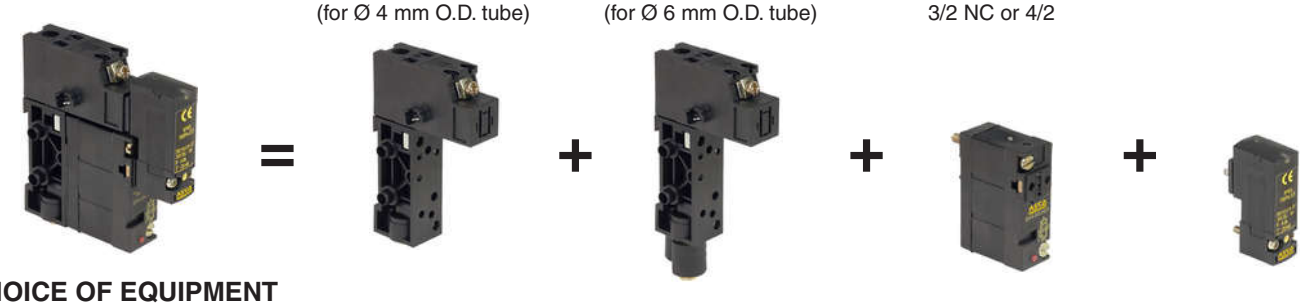

## CHOICE OF EQUIPMENT

| description | | | code (1) | |
|---|---|---|---|---|
| interface subbase (Ø 4 mm O.D. tube) | | | **30400011** | |
| interface subbase (Ø 6 mm O.D. tube) | | | **30400024** | |
| set of two end subbases (for Ø 6 mm O.D. tube) | | | **30400001** | |
| intermediate supply module (for Ø 6 mm O.D. tube) | | | **30400004** | |
| valve module 3/2 normally closed (NC) | | | **30400007** | |
| valve module 4/2 | | | **30400008** | |
| | | | with LED | without LED |
| solenoid pilot valve with or without visual indicator (LED) and electrical protection | manual override impulse | (=) | **30215178--P** (2) | **30211178--P** (2) |
| | | (~) | **30215178--L** (2) | **30211178--L** (2) |
| | manual override screwdriver | (=) | **30215179--P** (2) | **30211179--P** (2) |
| | | (~) | **30215179--L** (2) | **30211179--L** (2) |
| blank marking tags (50) | | | **33400042** | |

(1) Each part must be ordered separately indicating the quantity and part number. They are delivered separately, unassembled
(2) Specify voltage and frequency

**OPTION** : Solenoid pilot valve without visual indicator and electrical protection

*All leaflets are available on:* **www.asco.com**



00316GB-2017/R01
Availability, design and specifications are subject to change without notice. All rights reserved.

## **DIMENSIONS** (mm), **WEIGHT** (kg)

| weight (complete interface) |
|---|
| 0,800 |

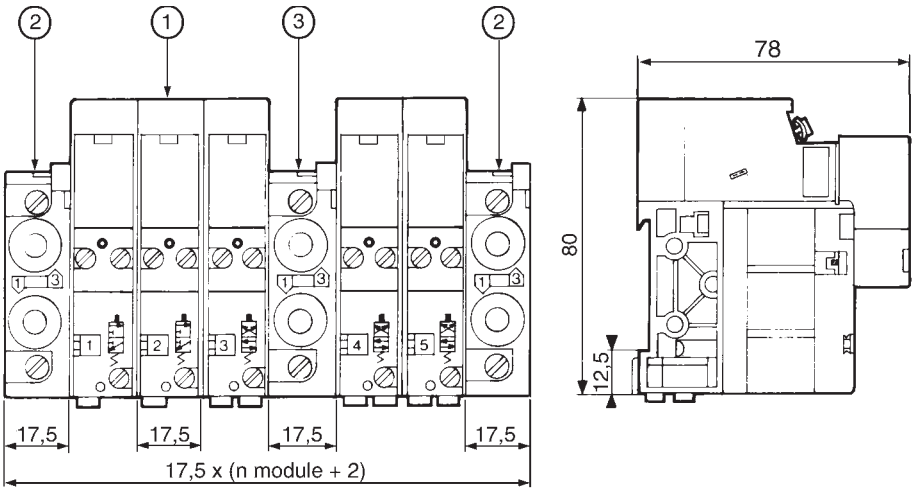


① Module
② Ends
③ Intermediate supply module for 2 different pressure in lets

00316GB-2016/R01
Availability, design and specifications are subject to change without notice. All rights reserved.