MK5801

Cylinder sensor with IO-Link

MKC3028BFRKG/H/IO/0,3M/ZH/AS

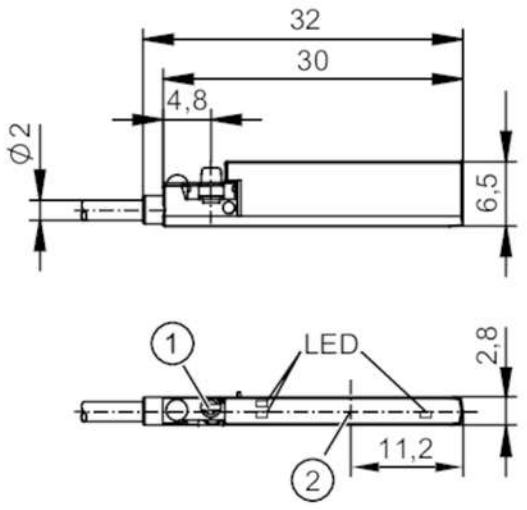

1 Fixing element
2 sensing face

Product characteristics		
Electrical design		PNP/NPN; (parameterisable)
Output function		normally open / normally closed; (parameterisable)
Communication interface		IO-Link
Application		
Operating principle		Hall sensor; (3D function)
Electrical data		
Operating voltage	[V]	10...30 DC; ("supply class 2" to cULus)
Current consumption	[mA]	< 20
Protection class		III
Reverse polarity protection		yes
Max. power-on delay time	[ms]	300
Inputs / outputs		
Number of inputs and outputs		Number of digital outputs: 1
Outputs		
Output signal		switching signal; IO-Link
Electrical design		PNP/NPN; (parameterisable)
Number of digital outputs		1
Output function		normally open / normally closed; (parameterisable)
Max. voltage drop switching output DC	[V]	2.5
Max. leakage current	[mA]	0.5
Permanent current rating of switching output DC	[mA]	100
Switching frequency DC	[Hz]	200
Type of short-circuit protection		pulsed
Short-circuit proof		yes

MK5801

Cylinder sensor with IO-Link

MKC3028BFRKG/H/IO/0,3M/ZH/AS

Overload protection		yes	
Detection zone			
Measuring range	[mm]	50; (depending on the application)	
Min. field strength	[mT]	1	
Accuracy / deviations			
Hysteresis	[mm]	1.25; (parameterisable)	
Repeatability	[mm]	< 0.2	
Linearity error IO-Link	[%]	< 5	
Resolution	[mm]	0,01; (depending on the application)	
Software / programming			
Parameter setting options		switch points; counter function; diagnostic function	
Interfaces			
Communication interface		IO-Link	
Transmission type		COM2 (38,4 kBaud)	
IO-Link revision		1.1.3	
SDCI standard		IEC 61131-9 CDV	
Profiles		**Function class**	**Designation**
		0x0010	Measuring and Switching Sensor, 1 channel / SSP 4.1.1
		0x4000	Identification and Diagnosis
		0x8013	Object detection
		0x8101	Locator
		0x8102	ProductURI
SIO mode		yes	
Required master port type		A	
Supported DeviceIDs		**Type of operation**	**DeviceID**
		default	1612
Operating conditions			
Ambient temperature	[°C]	-25...85	
Protection		IP 65; IP 67	
Tests / approvals			
EMC		EN 61000-4-2	- CD / 8 kV AD
		EN 61000-4-3	10 V/m
		EN 61000-4-4	2 kV
		EN 61000-4-6	10 V
		EN 55011	class B
Impact resistance		EN 60068-2-75 Ehc	1 J
Vibration resistance		EN 60068-2-6 Fc	20 g (10...3000 Hz) / 50 sweep cycles, 1 octave per minute, in 3 axes
Shock resistance		EN 60068-2-27 Ea	30 g 11 ms half-sine; 3 shocks each in every direction of the 3 coordinate axes
MTTF	[years]	1362	

MK5801

Cylinder sensor with IO-Link

MKC3028BFRKG/H/IO/0,3M/ZH/AS

UL approval		Ta	-25...75 °C
		Enclosure type	Type 1
		power supply	Class 2
		UL Approval no.	C020
		File number UL	E174191

Mechanical data		
Weight	[g]	9.9
Mounting		flush mountable
Type of mounting		clamping screws with head for slotted screwdriver
Cylinder type		C-slot cylinders
Materials		housing: PA; fastening clamp: stainless steel

Displays / operating elements		
Display	switching status	2 x LED, yellow SSC1.1 SSC1.2
	operation	1x LED, green

Remarks	
Pack quantity	1 pcs.

Electrical connection

Cable: 0.3 m, Ø 2 mm; 3 x 0.08 mm²

Connector: 1 x M8; coding: A

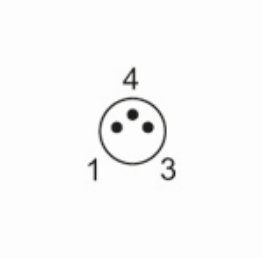

Connection

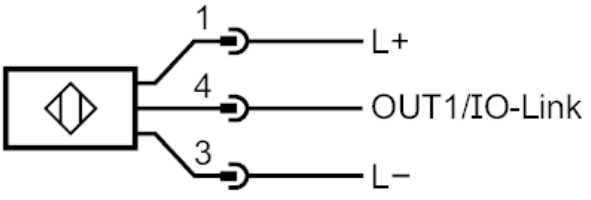

4: IO-Link / OUT1