



SRP-N118



SRP-N1186

SRP-N118 / SRP-N1186

- process meter in wall-mounted IP 67 case
- extended displayed values range untill 6 digits: -99999 ÷ 999999
- input: 0/4-20 mA, 0/1-5V, 0/2-10V
- 0 or 2 REL / OC outputs
- analogue output: active or passive (option)
- power supply output: 24V DC
- RS-485 / Modbus RTU
- signal peak value detection
- free configuration software S-Config

The **SRP-N118(6)** meter is designed for measuring of typical current or voltage signals. The readouts are presented on well-readable display with standard range of four digits or five/six digits for more demanding applications (e.g. measurement range: 4 - 20 mA, indications range: 0 - 20 000 kg). Thanks to the tight housing with high (IP 67) protection degree, this device is particularly suitable for operations in harsh environments. Wide range of characteristic curves (linear, square root, quadratic, user-defined and volume characteristic for cylindrical tanks) allows the use of meters in various process control systems. The 24V DC / 100 mA output is designed to supply measuring transducers, and the RS-485 port enables data transmission in production process monitoring systems. The REL / OC control outputs can adjust the level of measured signal and are controlled according to one or two threshold values. Moreover, the meter can be equipped with analogue outputs, according to the customer selection: active current output, passive isolated current output or active voltage output. The meter may be configured with no need to open the case, by using the remote controller or with free S-Config software via the RS-485 communication port.

TECHNICAL DATA

Power supply **Power consumption**	19V ÷ 50V DC; 16V ÷ 35V AC or 85 ÷ 260V AC/DC, all separated for 85 ÷ 260V AC/DC and 16V ÷ 35V AC power supply: max. 5 VA; for 19V ÷ 50V DC power supply: max. 5 W
Display	LED, 4 x 20 mm or 6 x 13 mm high, red (green - on request), brightness adjustable in 8 steps
Displayed values	-999 ÷ 9999 or -99999 ÷ 999999 + decimal point
Input	current: 0-20 mA or 4-20 mA, programmable, input resistance < 65 Ω (typ. 55 Ω), overload-protected, input current limited to 40 mA; voltage: 0-5 V, 1-5V, 0-10V or 2-10V, programmable, input resistance > 50 kΩ
Accuracy	0.1% @25°C ± one digit
Stability	50 ppm/°C
Outputs (option)	0 or 2 x REL I_{max}=1A, U_{max}=30VDC/250VAC (cosø=1) or OC I_{max}=30mA, U_{max}=30VDC, P_{max}=100mW
Analogue output (available with 1 x REL or OC, see ordering)	active current: operating range 0/4-20 mA (max. 0-24 mA), load resistance 700 Ω max., resolution 13 bit passive current: isolated, operating range 4-20 mA (max. 2,8-24 mA), load resistance 600 Ω@24VDC, resolution 13 bit active voltage: operating range 0/1-5V, 0/2-10V (max. 0-11V), load resistance min. 2000 Ω, resolution 13 bit
Power supply output	24V DC +5%, -10% / max. 100 mA, stabilized
Communication interface	RS-485, 8N1 and 8N2, 1200 bit/s ÷ 115200 bit/s, Modbus RTU (not galvanically isolated)
Operating temp.	0°C ÷ +50°C (standard), -20°C ÷ +50°C (option)
Storage temp.	-10°C ÷ +70°C (standard), -20°C ÷ +70°C (depending on option)
Protection class	IP 67
Case	wall mounting; material: ABS + fibreglass
Glands	M12, cable diameter 3 ÷ 6,5 mm
Dimensions (WxHxD)	without glands: 110 x 80 x 67 mm; with glands: 110 x 105 x 67 mm
Weight	max. 350 g

DIMENSIONS

Case dimensions

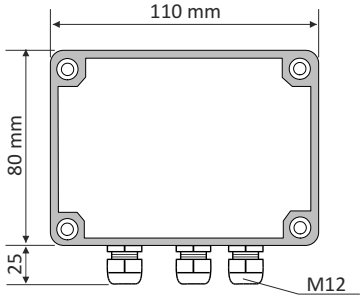

Side view

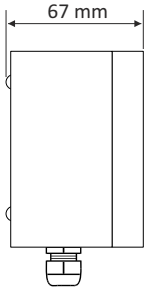

Distances between mounting holes

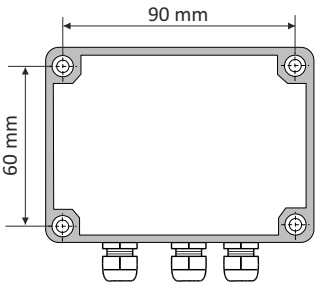

EXAMPLARY PIN ASSIGNMENTS

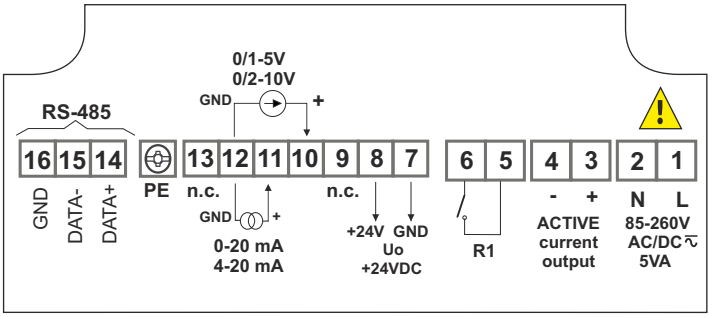

version with 1 x REL and 1 x AO 0/4-20 mA, active

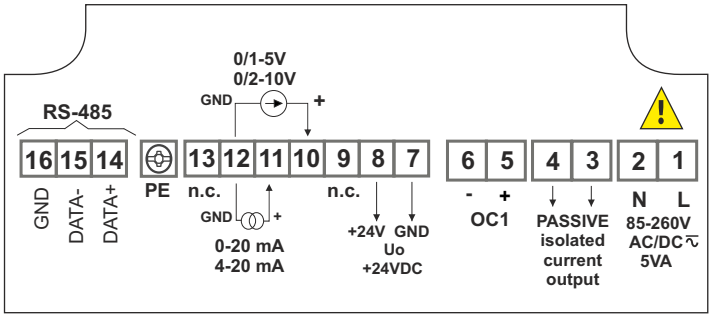

version with 1 x OC and 1 x AO 4-20 mA, passive

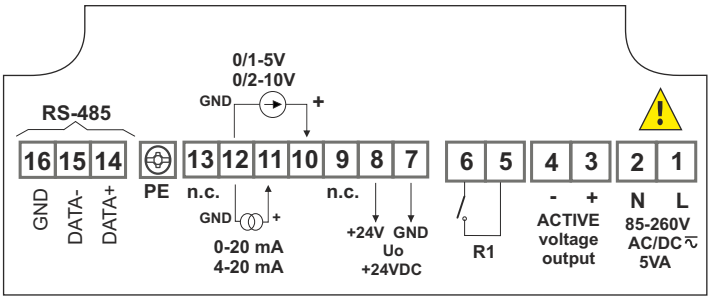

version with 1 x REL and 1 x AO 0/1-5V, 0/2-10V, active

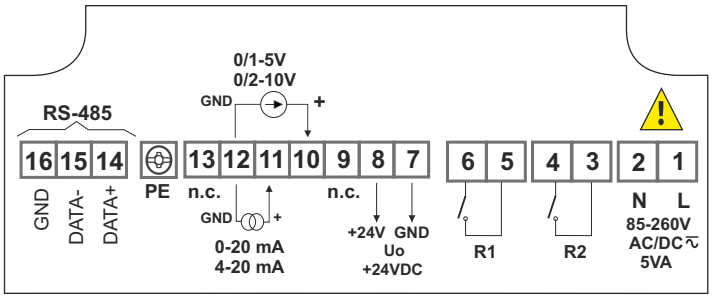

version with 2 x REL

ORDERING

SRP-X-18XX-1-X-XX1

display:
N118 : 4-digits
N1186 : 6-digits

number of outputs:
0
2

type of outputs:
0 : no output
1 : 2 x REL
2 : 2 x OC
3 : 1 x REL + 1 x AO *(0/4-20 mA, active, non-isolated)*
4 : 1 x OC + 1 x AO *(0/4-20 mA, active, non-isolated)*
9 : 1 x REL + 1 x AO *(4-20 mA, passive, isolated)*
A : 1 x OC + 1 x AO *(4-20 mA, passive, isolated)*
B : 1 x REL + 1 x AO *(0/1-5V, 0/2-10V, active, non-isolated)*
C : 1 x OC + 1 x AO *(0/1-5V, 0/2-10V, active, non-isolated)*

options:
00 : no options
03 : green colour LED display
08 : operating temp. -20°C ÷ +50°C
0L : green colour LED display + operating temp. -20°C ÷ +50°C

power supply:
3 : 24V AC/DC
4 : 85V - 260V AC/DC

REMOTE CONTROLLER



SIR-15
InfraRed remote controllers may be used as external programming keyboard for all SIMEX devices equipped with IR receivers and remote programming functions. Pressing of any local IR controller key, causes transmission of it's code to the device. Functions of particular keys depend on devices features.

Power supply voltage:	6V DC - 4 alkaline batteries type LR44
Operation range:	from 0,5 to 5 m (depend on programmed device features)

SOFTWARE

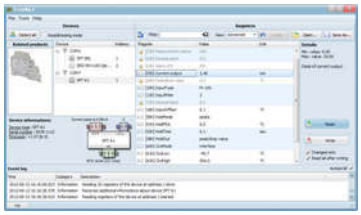

S-Config 2 is used for the simultaneous detection of devices in multiple Modbus RTU networks and allows user to change the configuration of most of them. For each detected device a list of its registers, which the user can modify, is displayed and also additional informations about device parameters (type, address in the network, etc.).
S-Config software can be downloaded from SIMEX website at **www.simex.pl**

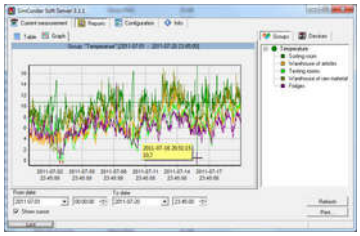

SimCorder Soft is a visualisation application created to facilitate work with advanced networks of the SIMEX devices, for acquisition, visualisation, reporting, archiving, exporting and printing of measurement data from all network devices. You can download measurements from the devices automatically or on demand. There is a possibility of immediate notification about emergency states via SMS or e-mail, which will often allow to quickly resolve an arising problem while avoiding long and expensive stoppages. You can view the measurement data, emergency states and configuration via the internet at every time.

CONVERTERS



The **SRS-U4** module is designed to connect a USB host to slave devices equipped with RS-485 interface. The PC with special software can be used as a host. The **SRS-U4** unit guarantees full galvanic isolation between USB and RS-485 circuits. The converter can work with any devices equipped with RS-485 interface and contains integrated circuit which supports USB 1.1 and USB 2.0 standards. The main purpose is connection of PC host computer with industrial data acquisition and visualisation systems based on RS-485 interface.
The **SRS-U4** can be also manufactured with DIN mounting adaptor.