Fan Accessories



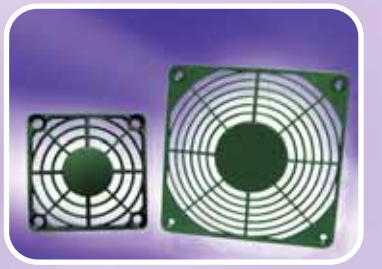



SUNON®



SUNON

METAL FINGER GUARD

FG-02 For 25mm Fan

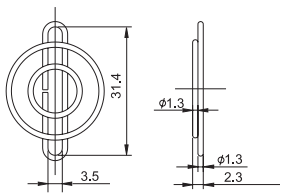

FG-03 For 30mm Fan

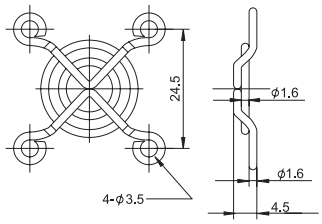

FG-04 For 40mm Fan

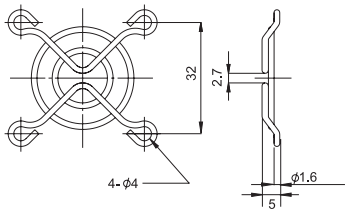

FG-05 For 50mm Fan

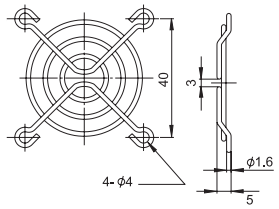

FG-06 For 60mm Fan

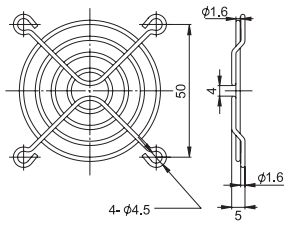

FG-08 For 80mm Fan

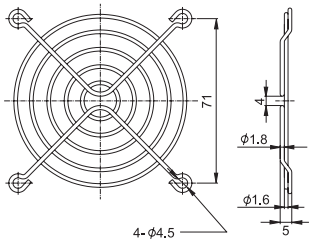

FG-09 For 92mm Fan

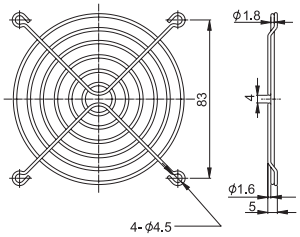

FG-12 For 120mm Fan

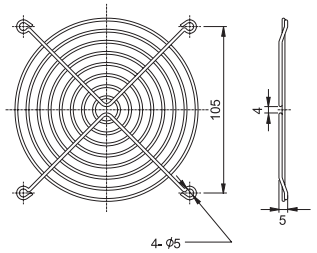

FG-17A For 172mm Fan

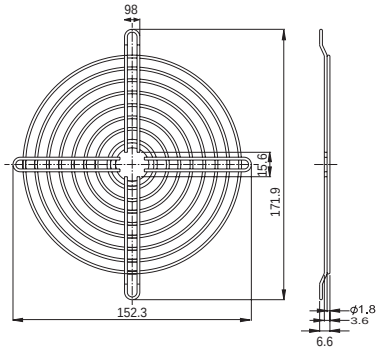

FG-17B For 172mm Fan

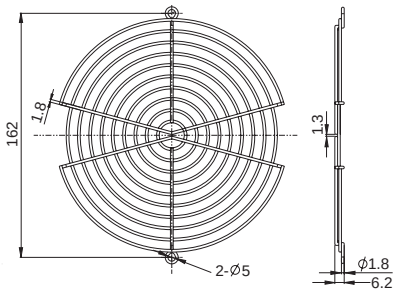

FG-18A For 176mm Fan

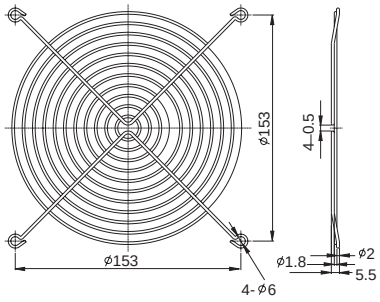

FG-18B For 176mm Fan

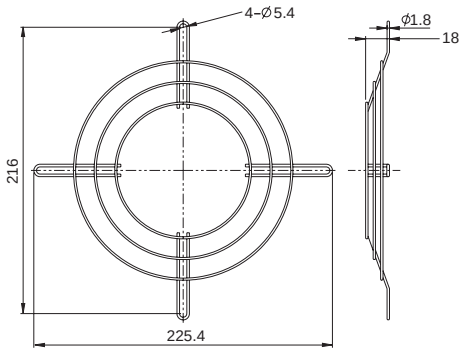

FG-25 For 254mm Fan

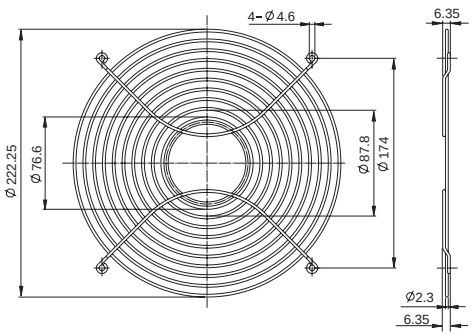



SUNON

METAL FILTER GUARD

FM 06 For 60mm Fan

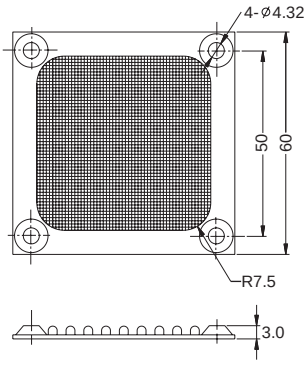

FM 08 For 80mm Fan

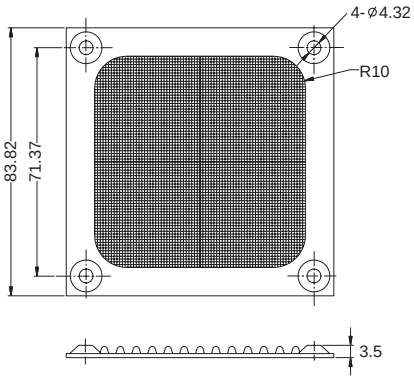

FM 09 For 92mm Fan

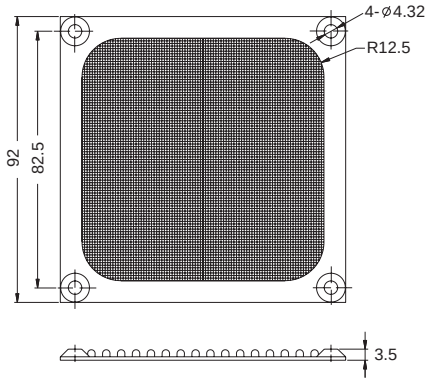

FM 12 For 120mm Fan

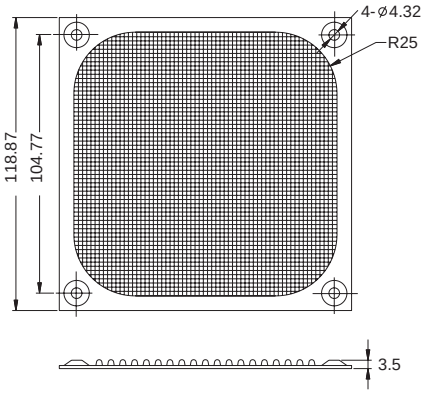



SUNON

PLASTIC GUARD

PB-06 For 60mm Fan

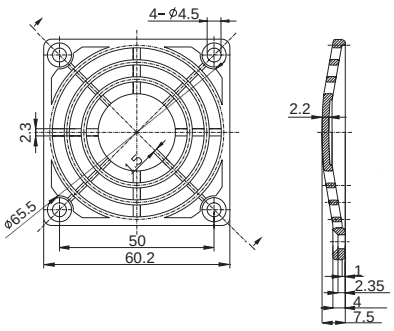

PB-08 For 80mm Fan

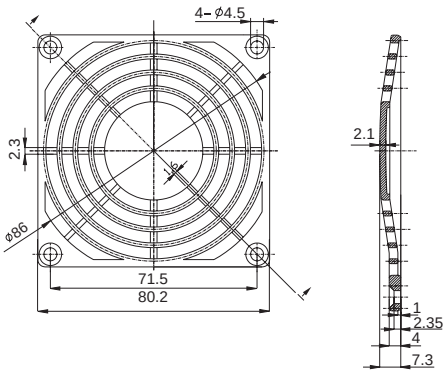

PB-09 For 92mm Fan

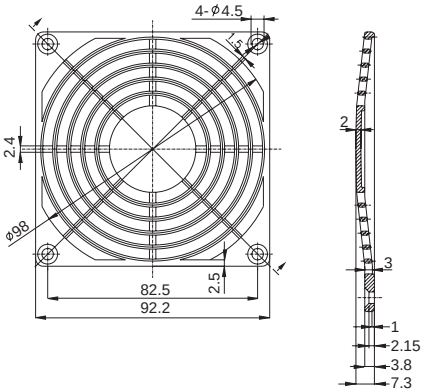

PB-12 For 120mm Fan

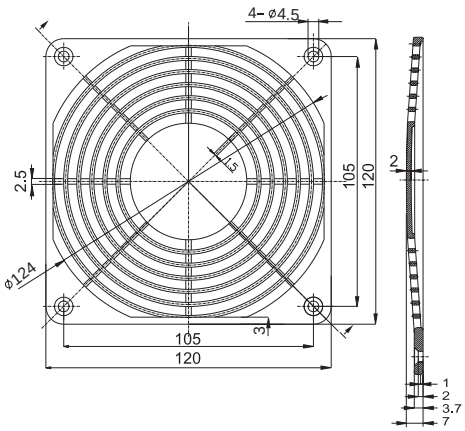

PB-17 For 170mm Fan

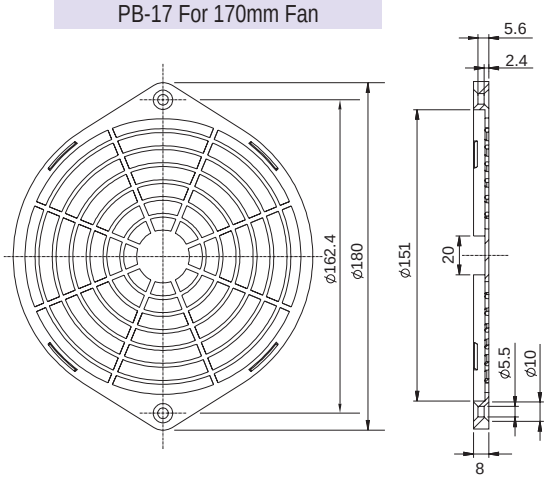



SUNON

PLASTIC FILTER GUARD

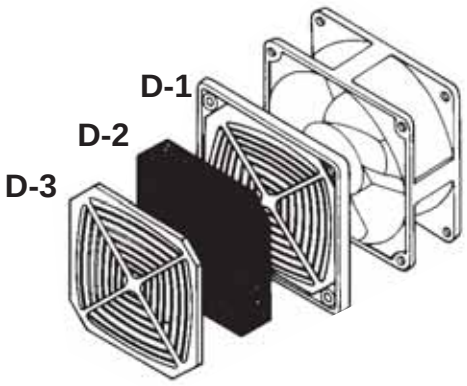

For 60mm Fan(06 D Type)

06 D-1 Finger Guard

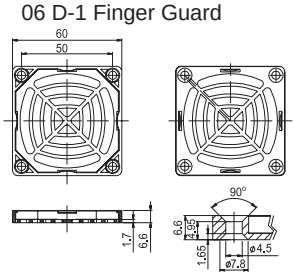

06 D-2 Filter

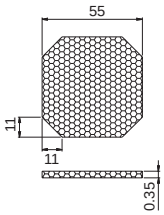

06 D-3 Remainer

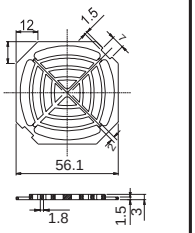

For 80mm Fan(08 D Type)

08 D-1 Finger Guard

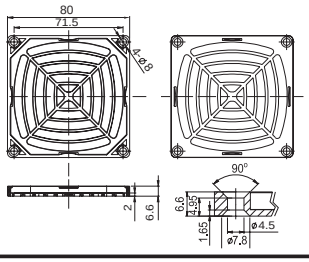

08 D-2 Filter

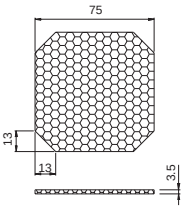

08 D-3 Remainer

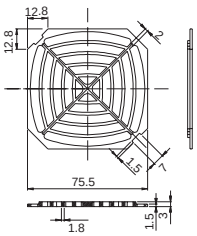

For 120mm Fan(12 D Type)

12 D-1 Finger Guard

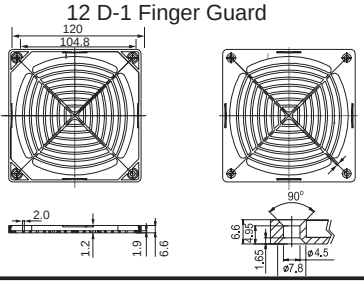

12 D-2 Filter

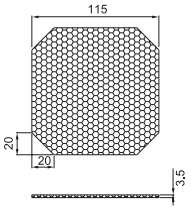

12 D-3 Remainer

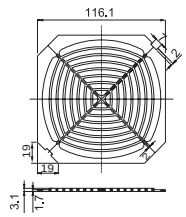

For 172mm Fan(17 D Type)

17 D-1 Finger Guard

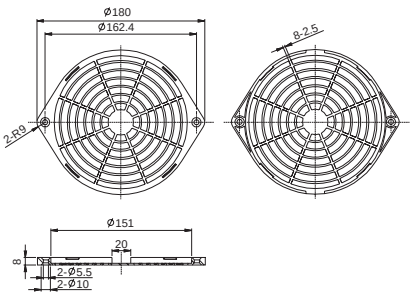

17 D-2 Filter

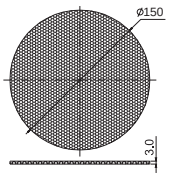

17 D-3 Remainer

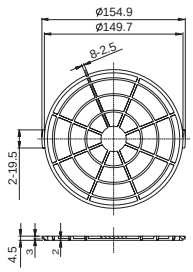



SUNON

AC CORD

Power cord with straight connector

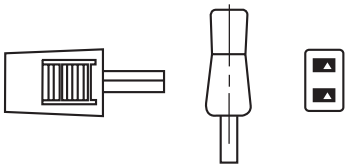

A2-03	300mm Length
A2-06	600mm Length
A2-10	1000mm Length
A2-20	2000mm Length



B2-03	300mm Length
B2-06	600mm Length
B2-10	1000mm Length
B2-20	2000mm Length



C2-03	300mm Length
C2-06	600mm Length
C2-10	1000mm Length
C2-20	2000mm Length

A2-A

(unit : mm)

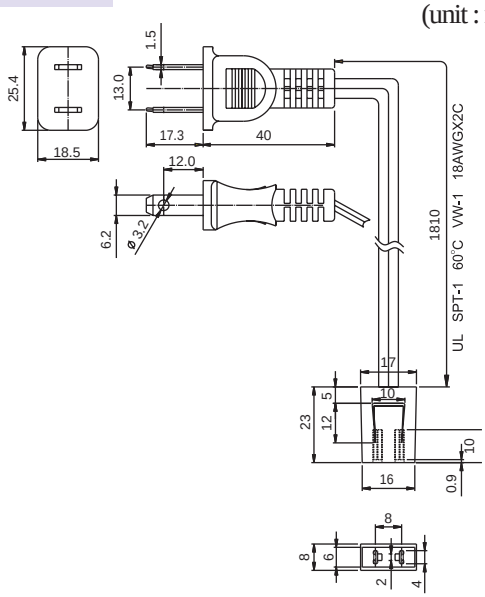

A2-B

(unit : mm)

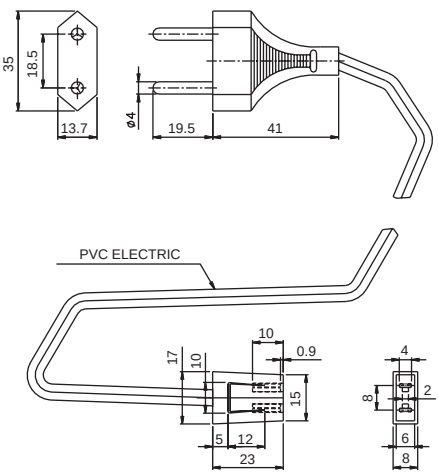



SUNON

AC CORD

A3-A

(unit : mm)

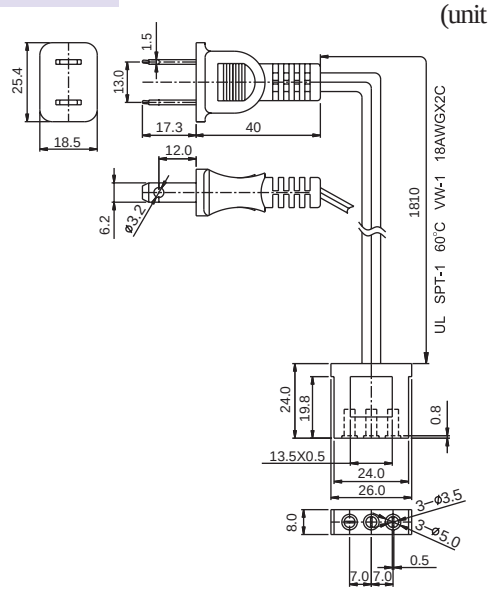

B2-C

(unit : mm)

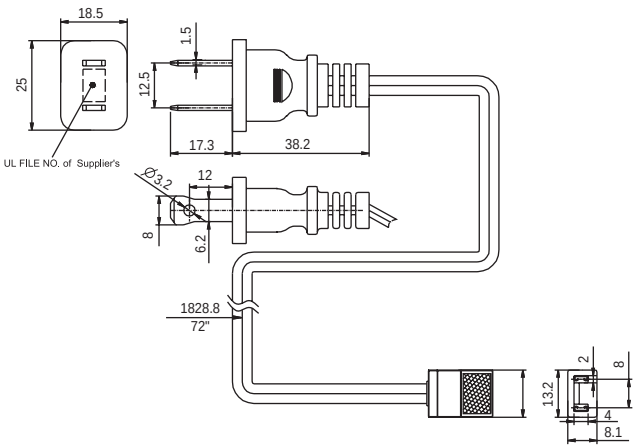

A3-B

(unit : mm)

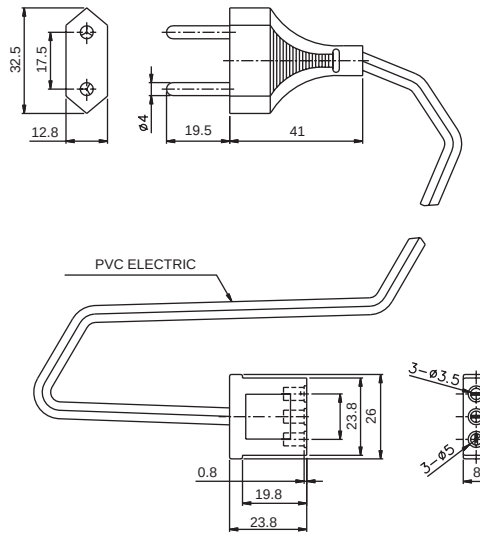

C2-D

(unit : mm)

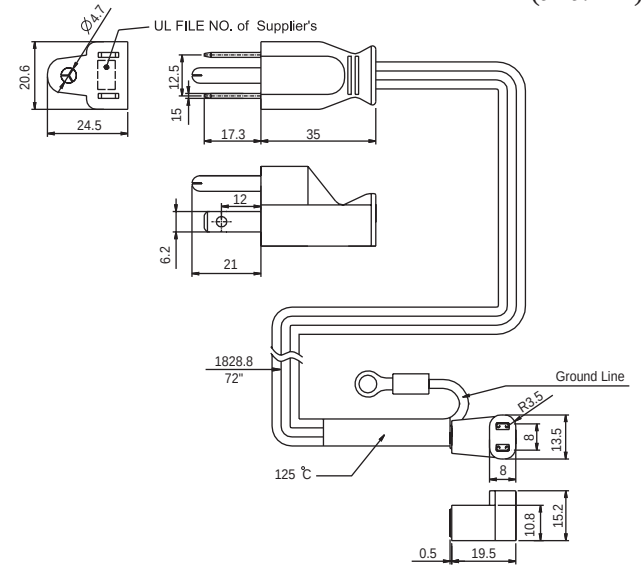

Headquarters:
Sunonwealth Electric Machine Industry Co., Ltd.
No. 30, Lane 296, Hsin Ya Road, Chien-Chen District, Kaohsiung,Taiwan
TEL : +886-7-8135888
FAX :+886-7-8230505/8230606/8231010
URL: http://www.sunon.com
E-mail: sunon@email.sunon.com.tw

Sunon Inc. (U.S.A.)
1075 West Lambert Road Suite A, Brea, California 92821, U.S.A
TEL : +1-714-255-0208
FAX :+ 1-714-255-0802
URL : http://www.sunonusa.com
E-mail : info@sunon.com

Sunon SAS (Europe)
Parc Medicis, 66, Ave Des Pepinieres 94832, Fresnes Cedex-France
TEL : +33-1-46154515
FAX : +33-1-46154510
URL: http://www.sunoneurope.com
E-mail : info@sunoneurope.com

Sunon Corporation (Japan)
Stork Minami Otsuka 4Fl.33-1, 2 Chome,
Minami Otsuka Toshimaku, Tokyo, Japan 170-0005
TEL : +81-3-5395-3069
FAX: +81-3-5395-3080
URL: http://www.sunon.co.jp
E-mail : info@sunon.co.jp

Sunonwealth Electric Machine Industry (HK) Ltd. (Hong Kong)
1906 Nan Fung Center, 264 Castle Peak Road, Tsuen Wan, Hong Kong
TEL : + 852-24-111-388
FAX : + 852-24-050-707
E-mail : info@sunon.com.hk

Sunon Technologies Pte Ltd. (Singapore)
10 Toh Guan Road, #03-08 TT International Tradepark, Singapore 608838
TEL : +65-6795-0300
FAX :+65-6795-0600
E-mail : info@sunon.com.sg

Sunon Electronics (Kun Shan) Co.,Ltd. (Shanghai, China)
TEL : +86-512-57700108
FAX :+86-512-57711575

Sunon China (Shen Zhen) Office (Shen Zhen, China)
TEL : +86-755-26880688
FAX :+86-755-26880288
E-mail : info@sunon.com.cn

All rights reserved. SUNON is registered trademarks of SUNONWEALTH Electric Machine Industry Co., Ltd. ©2005 SUNONWEALTH Electric Machine Industry Co., Ltd.

2005/8/15 (115-1)