# BFA01270400

COMPLETA STAR-DELTA STARTER, OPEN FRAME, FOR STARTING TIME UP TO 12 SECONDS AND A MAXIMUM OF 30 OPERATIONS/HOUR, MAX IEC OPERATING CURRENT 22A. COIL VOLTAGE 400VAC 50/60HZ



| | | | |
|---|---|---|---|
| Product designation | | | Star-delta starter |
| Product type designation | | | BFA012 |
| **Electrical features** | | | |
| Maximum operating current (≤440V) | | A | 22 |
| **Components** | | | |
| Contactor standard supplied | | | BF1210A / BF1201A / BF0910A |
| Thermal relay standard supplied | | | No |
| Thermal relay to purchase separately | | | RF38 |
| Auxiliary contact standard supplied | | | BFX1020 / / BFX1011 |
| **Contact characteristics** | | | |
| IEC standard motor powers | | | |
| | 230V | kW | 5.5 |
| | 400V | kW | 11 |
| | 440V | kW | 11 |
| | 500V | kW | 11 |
| **Mechanical features** | | | |
| Weight | | g | 1700 |
| **Dimensions** | | | |

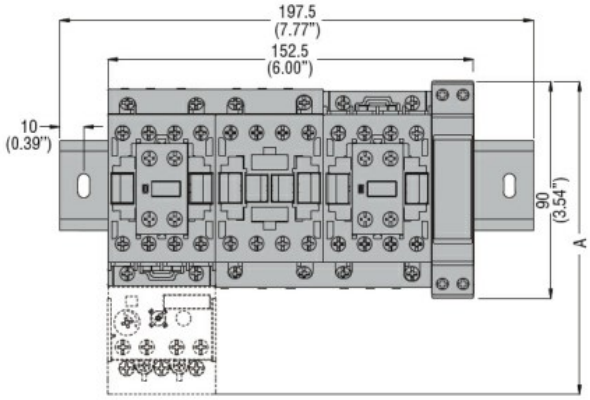


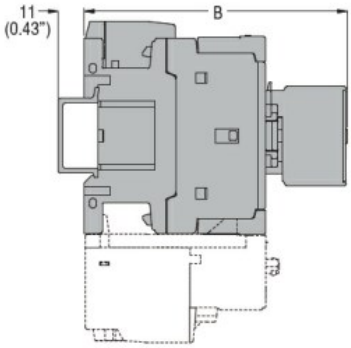


| STARTER TYPE | A | B |
|---|---|---|
| BFA009 70 | 130.5 (5.14") | 109.5 (4.31") |
| BFA012 70 | 130.5 (5.14") | 109.5 (4.31") |
| BFA018 70 | 130.5 (5.14") | 109.5 (4.31") |
| BFA025 70 | 130.5 (5.14") | 109.5 (4.31") |
| BFA026 70 | 135 (5.14") | 119 (4.68") |
| BFA032 70 | 135 (5.14") | 119 (4.68") |
| BFA038 70 | 135 (5.14") | 119 (4.68") |
| BFA050 70 | 173 (6.81") | 142 (5.59") |
| BFA065 70 | 173 (6.81") | 142 (5.59") |
| BFA080 70 | 183 (7.20") | 142 (5.59") |

## Wiring diagrams


The characteristics described in this document are subject to updates or modifications at any time. The descriptions, technical and functional information, illustrations and instructions in this brochure are purely illustrative, and are consequently not contractually binding

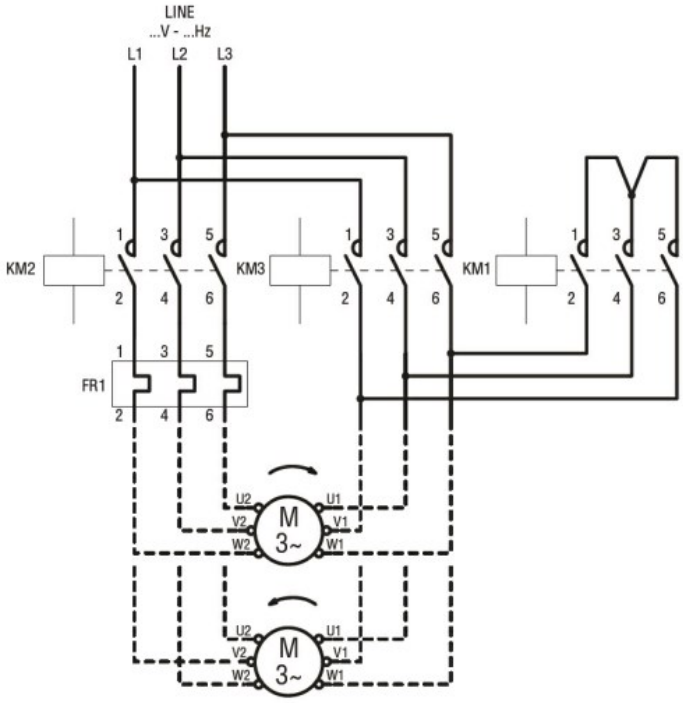


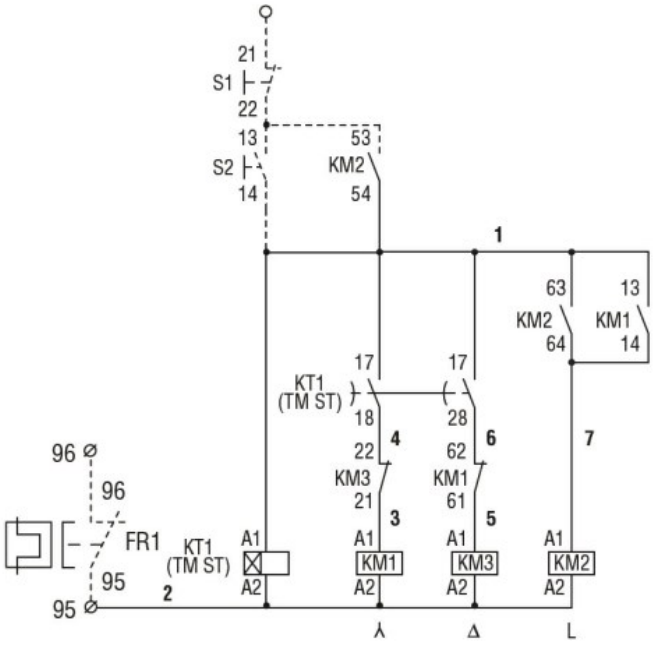


## Certifications and compliance

Compliance

| | |
|---|---|
| | IEC/EN 60947-1 |
| | IEC/EN 60947-4-9 |

Certificates

/

## ETIM classification

| | |
|---|---|
| ETIM 8.0 | EC001037 - Motor starter/Motor starter combination |


The characteristics described in this document are subject to updates or modifications at any time. The descriptions, technical and functional information, illustrations and instructions in this brochure are purely illustrative, and are consequently not contractually binding