TOP VIEW OF ENCLOSURE

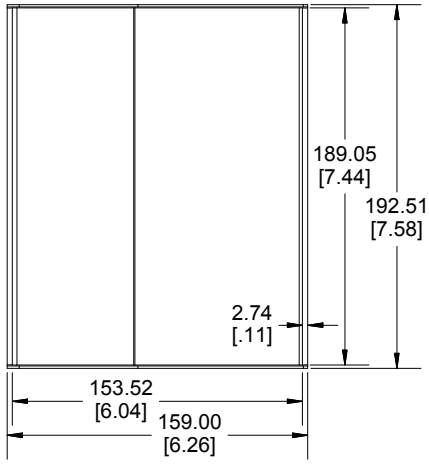

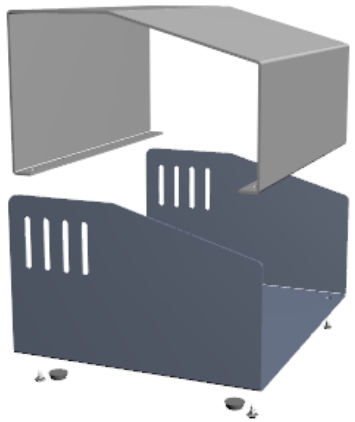

DETAIL A
SCALE 1 / 2
END VENTS

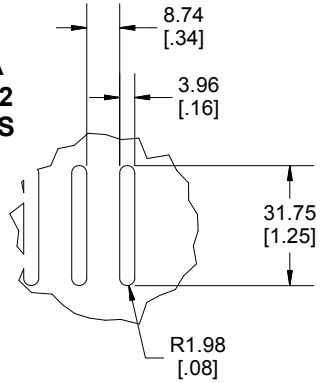

BACK VIEW OF ENCLOSURE

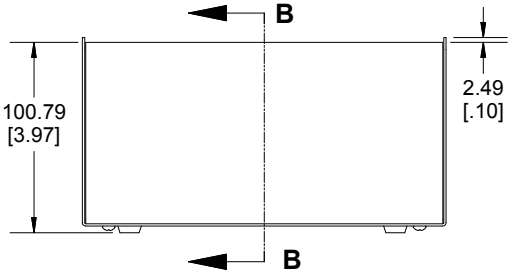

END VIEW OF ENCLOSURE

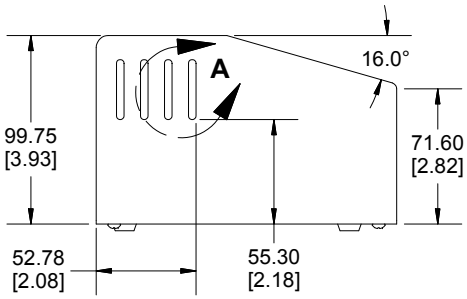

FRONT VIEW OF ENCLOSURE

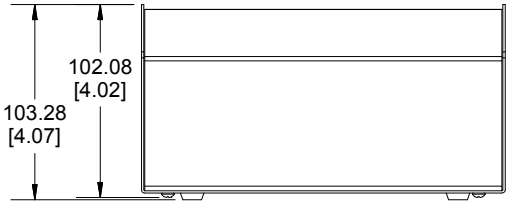

Enclosures can be Factory Modified (Milling, Drilling, Printing etc.)
Contact Factory mjm@hammondmfg.com for quotes
Solid models of this enclosure available in STEP or IGES.

SECTION B-B
END VIEW

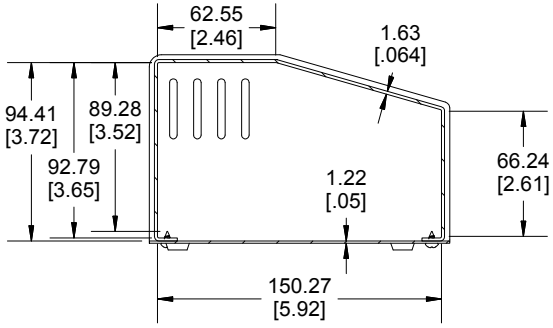

BOTTOM VIEW OF ENCLOSURE

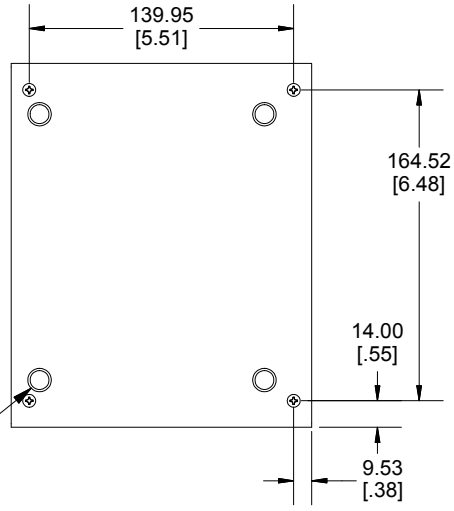

NOTE
Case Includes Adhesive Rubber Feet and Required Hardware.
Enclosure Case is Made of 0.05" Steel.
Top Panel is Made of 0.064" Aluminum.

PART NUMBERS	
515-0940 Enclosure	
Smooth Light Grey Top Case Dark Satin Grey Base Case	515-0940
ACCESSORIES	
Plated Cover Screws (Pkg 50) [#6 x 1/4 Self Tapping]	**SC19482-50**
Grey Self-Adhesive Rubber Feet (Pkg 4)	**1421T2GY**

Dimensions:
mm
[inches]

HAMMOND MANUFACTURING™

515-0940

www.hammondmfg.com