SFK 30 S

Safety lamella-basket plug

Ø 4mm Sicherheit | 1.000 V CAT II | 32 A

- straight, with screw terminal for cables up to 2.5 mm²
- with sleeve, unassembled

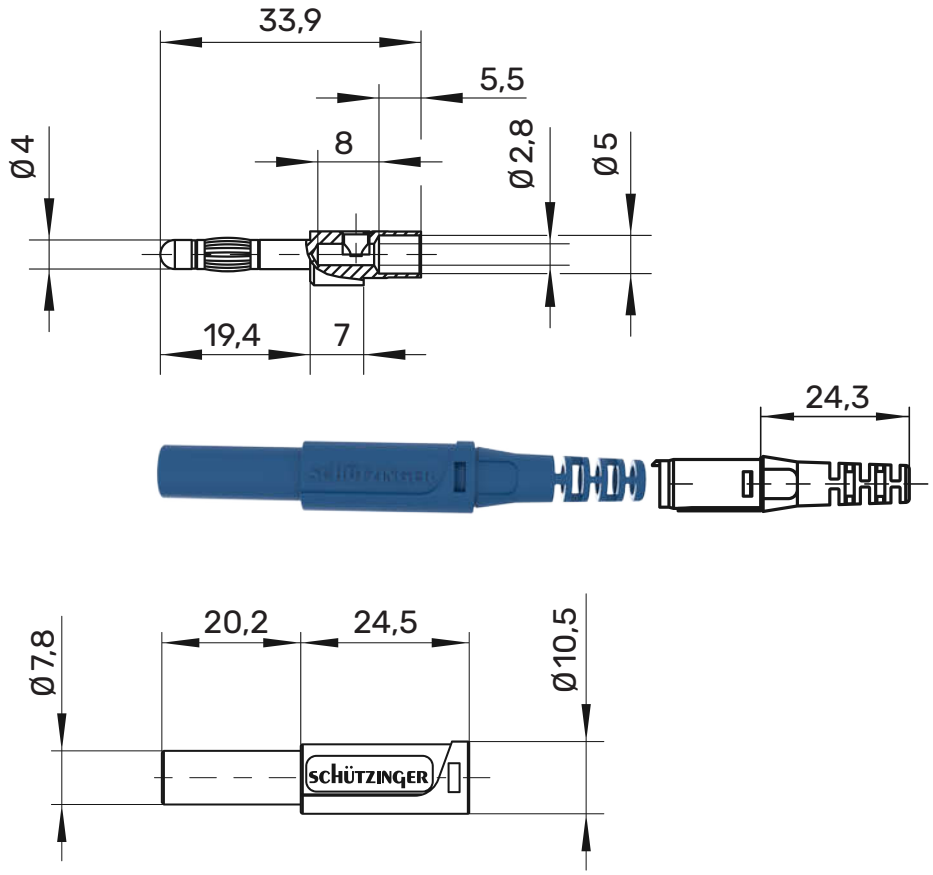

MA 27

General information

Order No. [1]	**SFK 30 S Ni | Au /OK ..(colour)**
colours	black, red, blue, yellow, green, grey, brown, white, purple, green-yellow
contact parts	nickel-plated | gold-plated
sleeves	PA 6.6 (Polyamid)

Technical data

terminal	screw up to 2,5 mm²
sleeve for cable	up to Ø 4 mm
for wire cross-section	up to 2,5 mm²
for cable diameter	up to 4 mm
transition resistance	3 mΩ (Ni) | 2 mΩ (Au)
rated voltage [2]	1000 V CAT II
rated current [2]	32 A
operating temperature	from -25 °C to +80 °C

[1] other contact platings, colours and sleeves for other cable diameter on request
[2] at normal ambient temperatures

date:26.05.2026

Artikelnummern
Article numbers

SCHÜTZINGER

SFK 30 S				Ni	Au
●	SW	Schwarz	Black	99014833	99015634
●	RT	Rot	Red	99014834	99015635
●	BL	Blau	Blue	99014835	99015636
●	GE	Gelb	Yellow	99014836	99015637
●	GN	Grün	Green	99014837	99015638
●	GR	Grau	Grey	99015629	99015639
●	BR	Braun	Brown	99015630	99015640
○	WS	Weiß	White	99015631	99015641
●	VI	Violett	Purple	99015633	99015643
◪	GNGE	Grüngelb	green-yellow	99015632	99015642