TECHNICAL DATA

DesignMax DM8S

surface-mounted loudspeaker

PROFESSIONAL

Product Overview

With coaxial two-way drivers, the 150-watt DesignMax DM8S loudspeaker delivers powerful SPL suitable for foreground music — along with premium aesthetics that complement any commercial sound installation. The DM8s features a two-way, 8-inch woofer and a center-firing coaxial 1-inch compression driver, delivering a 52 Hz – 20 kHz frequency range. The DM8S is surface-mounted and locks onto a hidden QuickHold U-bracket for fast, secure installation.



Key Features

Combine DesignMax models to complete any design, big or small — 12 loudspeakers to mix and match, from 2-inch, low-profile models to 8-inch, high-SPL compression-driver loudspeakers and outdoor-rated options.

Deliver rich lows and clear, intelligible highs with coaxial two-way drivers — no DSP or EQ required. For even better sound, use select Bose DSPs and amplifiers to enable Bose loudspeaker EQ and SmartBass processing, which expands performance and response at any listening level.

Blend with any room design with elegant form factors, minimum-bezel grilles available in black or white, and removable logos.

Reduce installation time with the patented QuickHold mounting system, which also reduces strain, hassle, and the chance of product damage.

Install easily with industry-standard accessories — all models include Euroblock connectors; in-ceiling models include plenum-rated backcans, tile bridges, and front-access audio wiring that makes installation and troubleshooting easier.

Deliver high SPL for clear foreground music.

Technical Specifications

SINGLE LOUDSPEAKER PERFORMANCE		
Frequency Response (–3 dB) [1]	60 – 20,000 Hz	
Frequency Range (–10 dB) [1]	52 – 20,000 Hz	
Nominal Coverage Angle (1 – 4 kHz)	130° conical	
Nominal Coverage Angle (1 – 10 kHz)	115° conical	
	AES component test [4]	**Bose extended-lifecycle test [5]**
Power Handling, long-term continuous	150 W	125 W
Power Handling, peak	600 W	500 W
Sensitivity (SPL/ 1W @ 1 m) [2]	93 dB	93 dB
Calculated Maximum SPL @ 1 m [3]	115 dB	114 dB
Calculated Maximum SPL @ 1 m, peak	121 dB	120 dB
Crossover	1.5 kHz (passive 2-way crossover)	
Loudspeaker EQ	Not Required, Bose EQ voicing and SmartBass processing available	
Recommended High-Pass Protection	48 Hz with recommended 24 dB / octave filter	
Overload protection	Resistor-network power reduction with automatic reset	
Transformer taps	70V: 2.5, 5, 10, 20, 40, 80 W, bypass 100V: 5, 10, 20, 40, 80 W, bypass	
TRANSDUCERS		
Low Frequency	1 x 8-inch woofer (203 mm)	
High Frequency	1 x 1-inch compression driver, coaxial center-firing (25 mm)	
Nominal Impedance	8 ohms (transformer bypass)	

DesignMax DM8S
surface-mounted loudspeaker

PHYSICAL	
Enclosure Material	Engineered plastics, highly UV fade resistant
Bracket Material	Powder-coated steel
Grille	Magnetically attached perforated steel, powder-coated finish, paintable, tamper-resistant design, includes safety-tether
Logo	Rotatable, removable
Color	Black: Ral 9005, White: Bose Arctic White, similar to RAL 9003, Paintable
Environmental	Indoor only
Safety Agency	UL-1480A, S5591/ UL Listed, NFPA70, CE compliant
Operating Temperature Range	0 °C to 50 °C (32 °F to 122 °F)
Connectors	Euroblock 6-pin connector with loop-through, mounted on rear. Accepts 18 AWG (0.8 mm^2) to 14 AWG (2.5 mm^2) size wire
Suspension / Mounting	QuickHold Mounting System with included U-Bracket
	4 preset mounting angles: 0°, 15°, 30°, 45° for wall or ceiling placement
	Two (2) rear M8 screw inserts for use with optional pan & tilt bracket and one (1) rear M8 screw insert for safety-tether attachment
Dimensions (H × W × D)	395 × 249 × 255 mm (15.6 × 9.8 × 10.0 in)
Dimensions (H × W × D) with bracket	395 × 249 × 272 mm (15.6 × 9.8 × 10.7 in)
Net Weight, Loudspeaker with grille	10.3 kg (22.8 lbs)
Shipping Weight, Single	13.2 kg (29.0 lb)
Included Accessories	U-Bracket, powder-coated steel
Optional Accessories	Pan & Tilt Bracket
PRODUCT CODES	
801332-0110	DESIGNMAX DM8S SINGLE BLK
801332-0210	DESIGNMAX DM8S SINGLE WHT

Footnotes
(1) Frequency response and range measured on-axis in half-space environment with Bose EQ voicing
(2) Sensitivity measured on-axis in half-space environment averaged 100 Hz – 10 kHz using recommended High-Pass protection
(3) Maximum SPL calculated from sensitivity and power handling specifications, exclusive of power compression
(4) AES standard 2-hour duration with IEC system noise
(5) Bose extended-lifecycle test using pink noise filtered to meet IEC268-5, 6-dB crest factor, 500-hour duration
(6) Measured in whole-space environment

For additional specifications and application information, please visit PRO.BOSE.COM.
Specifications subject to change without notice. 09/2020

DesignMax DM8S
surface-mounted loudspeaker

On-Axis Frequency Response

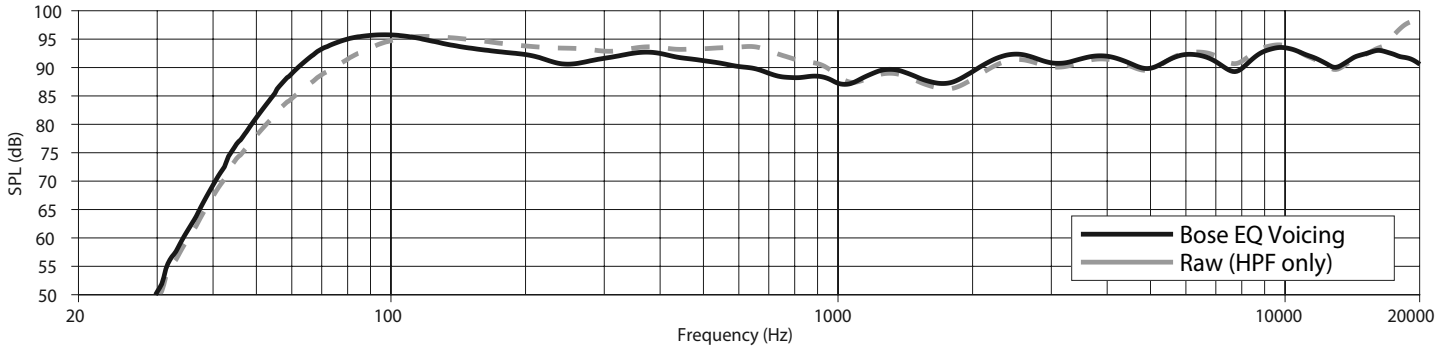

Impedance

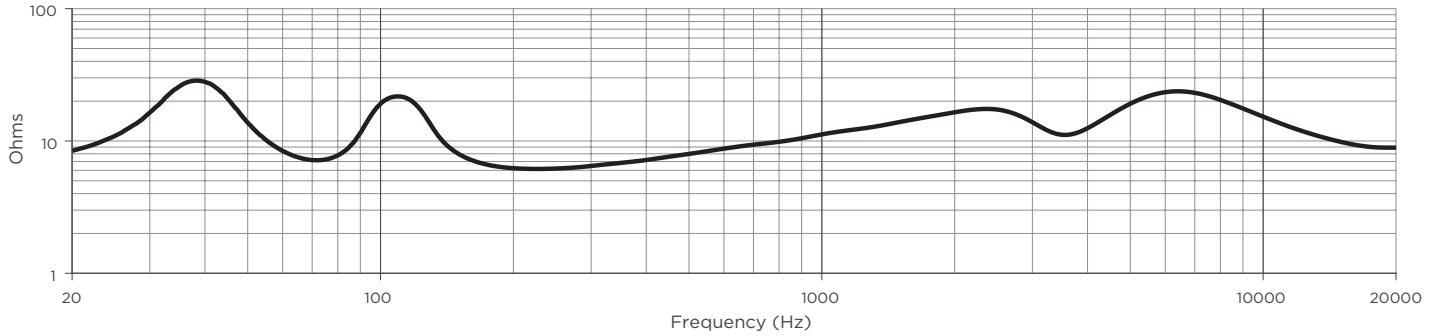

Beamwidth [6]

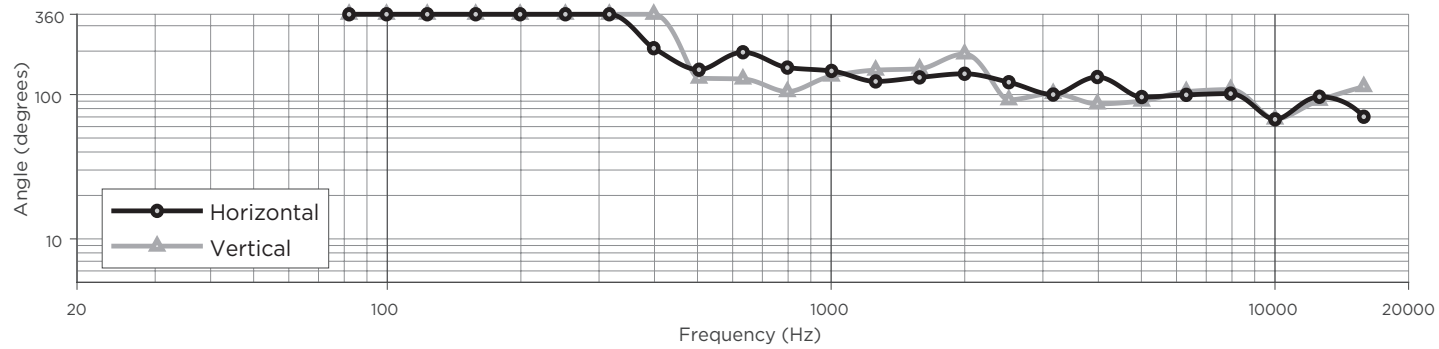

For additional specifications and application information, please visit PRO.BOSE.COM.
Specifications subject to change without notice. 09/2020

DesignMax DM8S
surface-mounted loudspeaker

Dimensions

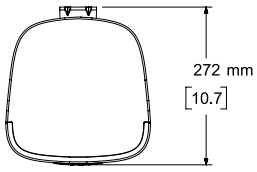

Top View

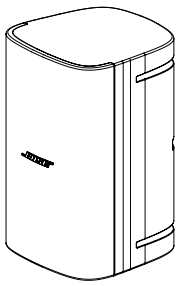

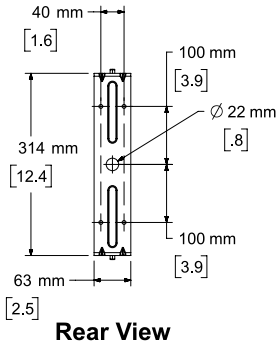

Rear View
BRACKET ONLY

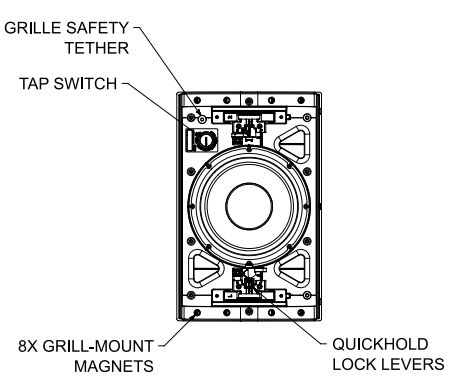

Front View
GRILLE REMOVED FOR CLARITY

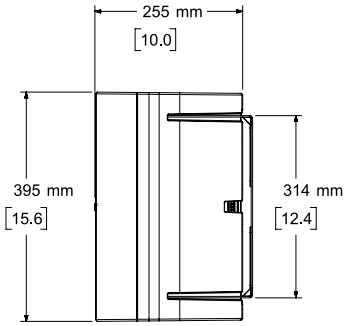

Right View
DIMENSIONS APPLY TO BOTH SIDES

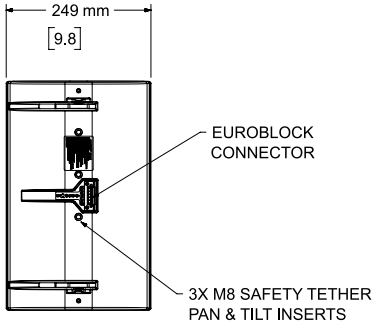

Rear View
BRACKET REMOVED FOR CLARITY

NOTES:
1. DIMENSIONS ARE IN MILLIMETERS OVER INCHES
2. WEIGHT APPROX 10.3kg [22.8lbs] (SPEAKER ONLY)
   WEIGHT W/BRACKET APPROX 11.3kg [24.9lbs]

For additional specifications and application information, please visit PRO.BOSE.COM.
Specifications subject to change without notice. 09/2020