LUS211-40-51-2UPN8-H1141
Ultrasonic Sensor – Level Control

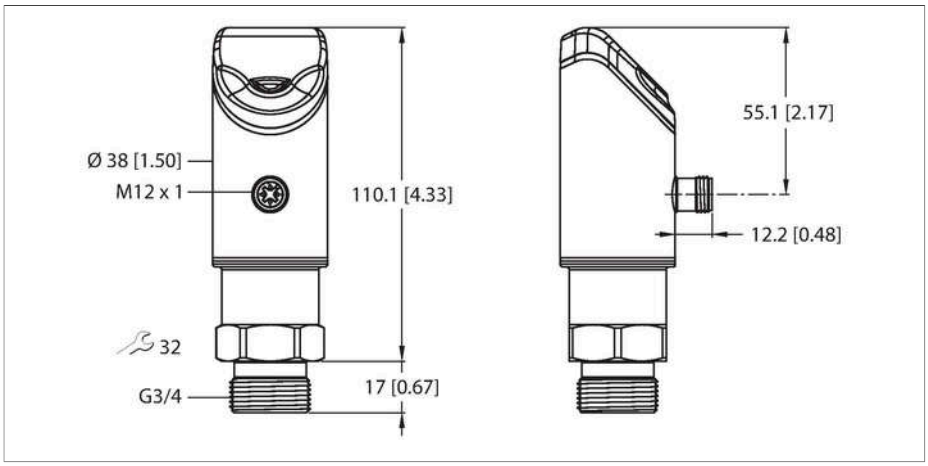



Technical data

Type	LUS211-40-51-2UPN8-H1141
Ident. no.	100003163
Ultrasonic data	
Function	Ultrasonic diffuse mode sensor
Range	5…400 mm
Resolution	0.5 mm
Minimum measuring range	50 mm
Minimum switching range	5 mm
Ultrasound frequency	320 kHz
Temperature drift	± 1.5 % of full scale
Edge lengths of the nominal actuator	20 mm
Approach speed	≤ 3 m/s
Pass speed	≤ 1.3 m/s
Electrical data	
Operating voltage	10…33 VDC
No-load current	≤ 150 mA
Load resistance	≤ 1000 Ω
Residual current	≤ 0.1 mA
Response time typical	< 60 ms
Readiness delay	≤ 300 ms
Communication protocol	IO-Link
Output function	NO/NC, PNP
Output 1	Switching output or IO-Link mode
Output 2	Switching output
Switching frequency	≤ 5 Hz
Hysteresis	≤ 5 mm

Features

- 4-digit, two-colored, 14-segment display, rotatable by 180°
- Housing is rotatable after plugging the process connection
- Process connection G3/4"
- Sealing ring included in delivery (stainless steel ring with NBR seal)
- Blind zone: 0.5 cm
- Range: 40 cm
- Resolution: 0.5 mm
- Cone angle of sonic cone: 15°
- 2 × switching outputs, PNP/NPN
- NO/NC programmable
- Transmission of process value and parametrization via IO-Link

Wiring diagram

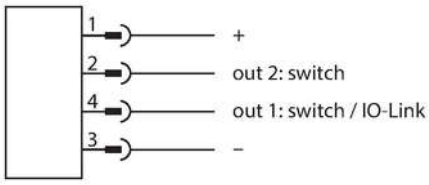

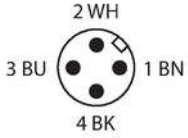

Functional principle

Ultrasonic sensors capture a multitude of objects contactlessly and wear-free with ultrasonic waves. It does not matter whether the object is transparent or opaque, metallic or non-metallic, firm, liquid or powdery. Even

LUS211-40-51-2UPN8-H1141| 20-01-2021 14-01 | Technical modifications reserved

Technical data

Voltage drop at I_e	≤ 2.5 V
Short-circuit protection	yes
Reverse polarity protection	yes
Setting option	Capacitive Sensor IO-Link
IO-Link	
IO-Link specification	V 1.1
IO-Link port type	Class A
Communication mode	COM 2 (38.4 kBaud)
Process data width	32 bit
Measured value information	15 bit
Switchpoint information	4 bit
Frame type	2.2
Minimum cycle time	5 ms
Function Pin 4	IO-Link
Function Pin 2	DI
Maximum cable length	20 m
Profile support	Smart Sensor Profil
Included in the SIDI GSDML	Yes
Mechanical data	
Design	Smooth barrel, LUS
Radiation direction	straight
Dimensions	Ø 38 x 127.1 mm
Housing material	Stainless-steel/Plastic, 1.4404 (AISI 316L)/Grilamid TR90 UV PA
Transducer material	Plastic, Epoxyd resin and PU foam
Electrical connection	Connectors, M12 × 1, 4-wire
Process connection	G 3/4"
Ambient temperature	-25…+70 °C
Protection class	IP67 IP69K
	Not assessed by UL
Tests/approvals	
Declaration of conformity EN ISO/IEC	EN 60947-5-2

environmental conditions such as spray, dust or rain hardly affect their function.
The sonic cone diagram indicates the detection range of the sensor. In accordance with standard EN 60947-5-2, quadratic targets in a range of sizes (20 × 20 mm, 100 × 100 mm) and a round rod with a diameter of 27 mm are used.
Important: The detection ranges for other targets may differ from those for standard targets due to the different reflection properties and geometries.

Sonic Cone

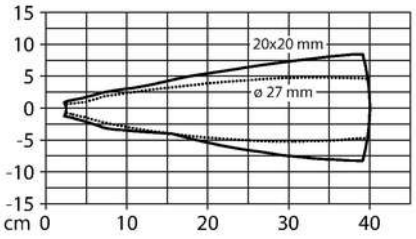

Mounting instructions

Mounting instructions/Description

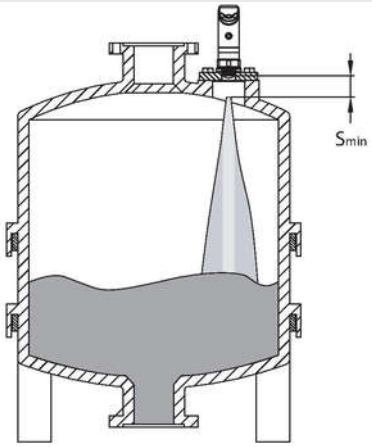

Accessories

Dimension drawing	Type	Ident. no.	
	RKC4.4T-2/TEL	6625013	Connection cable, female M12, straight, 4-pin, cable length: 2 m, sheath material: PVC, black; cULus approval; other cable lengths and qualities available, see www.turck.com
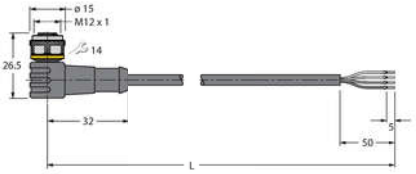	WKC4.4T-2/TEL	6625025	Connection cable, female M12, angled, 4-pin, cable length: 2 m, sheath material: PVC, black; cULus approval; other cable lengths and qualities available, see www.turck.com
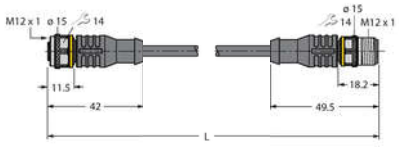	RKC4.4T-2-RSC4.4T/TEL	6625208	Connection cable, M12 female plug, straight, 4-pin, cable length: 2 m, sheath material: PVC, black; cULus approval; other cable lengths and qualities available, see www.turck.com

LUS211-40-51-2UPN8-H1141| 20-01-2021 14-01 | Technical modifications reserved