Push-pull connectors female fixed socket CCM series

CCM2S1/07
7 pole

- Premium range of circular connectors
- IP68 sealed using vacuum technology (when connected and using environmental cable clamp)
- Tough, high performance interconnection solution
- Compact panel mounting design
- Ideal for harsh and extreme environments
- Suitable for broadcasting, autosport, military, rail, marine, security, industrial and agricultural applications
- Key coded to prevent misconnection
- Will not disconnect when the cable is under load or stress
- Tool slots for secure and tight mounting
- Tested to IEC 60512-3-5a

CCM2S1/07



PART NO.	DESCRIPTION	POLES	SERIES
CCM2S1/07	Female fixed socket	7	CCM series

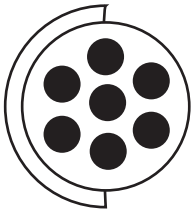

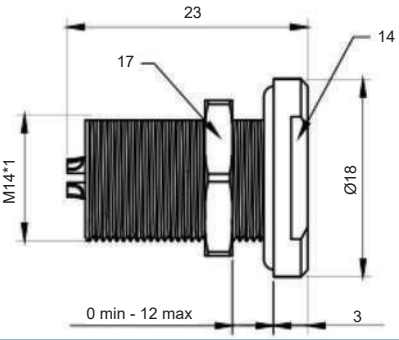

SPECIFICATION	
Shell style/model	DEU type fixed socket, female contact
Codes	Code 1
Contact type	Solder type
Contact diameter	0.7mm
Max. stranded conductor	AWG 21-22
Max diameter	0.79mm
Vtest (contact-shell)	1000V(AC) 2000V(DC)
Vtest (contact-contact)	1300V(AC) 2000V(DC)
Rated current	5.0A
Rated voltage	≤250V
Mechanical operation	5000 mating cycles
Housing material	Brass (natural chrome plated) shell and collet nut, nickel plated brass latch sleeve and mid pieces
Insulator	PPS
Contacts	Brass (gold plated)
Humidity (max)	<=95% [at 60°C /140°F]
Vibration	15g [10 Hz - 2000 Hz]
Shock resistance	100g [6 ms]
Salt spray corrosion	>72 hr
Climatical category	50/175/21
Shielding (min)	75 dB (10 MHz)
Shielding (min)	40 dB (1 GHz)
IP rating	IP68 (when connected and using environmental cable clamp)

KEY FEATURES

Key coded | Panel mounting socket | Flat face | Face slots for tightening with a tool

ACCESSORIES

Metal and rubber caps for sockets

PART NO.	DESCRIPTION
CCT21	Camcirc metal cap for sockets A2



PART NO.	DESCRIPTION
CCT22	Camcirc rubber cap for sockets A2



ASSOCIATED PRODUCTS

CCA2P1/A07 - CCA Series A2 size plug page 111

bsi. ISO 9001 Quality Management FM 28614 ISO 14001 Environmental Management EMS 613558

+44 (0)1638 716101 | sales@camdenboss.com | www.camdenboss.com

We operate a constant improvement policy, our products are subject to change without notice.

Vers 1