PIM694

Pressure sensor with diagnostic function for pumps

PIM010-REA01-KFPKG/US/ /P

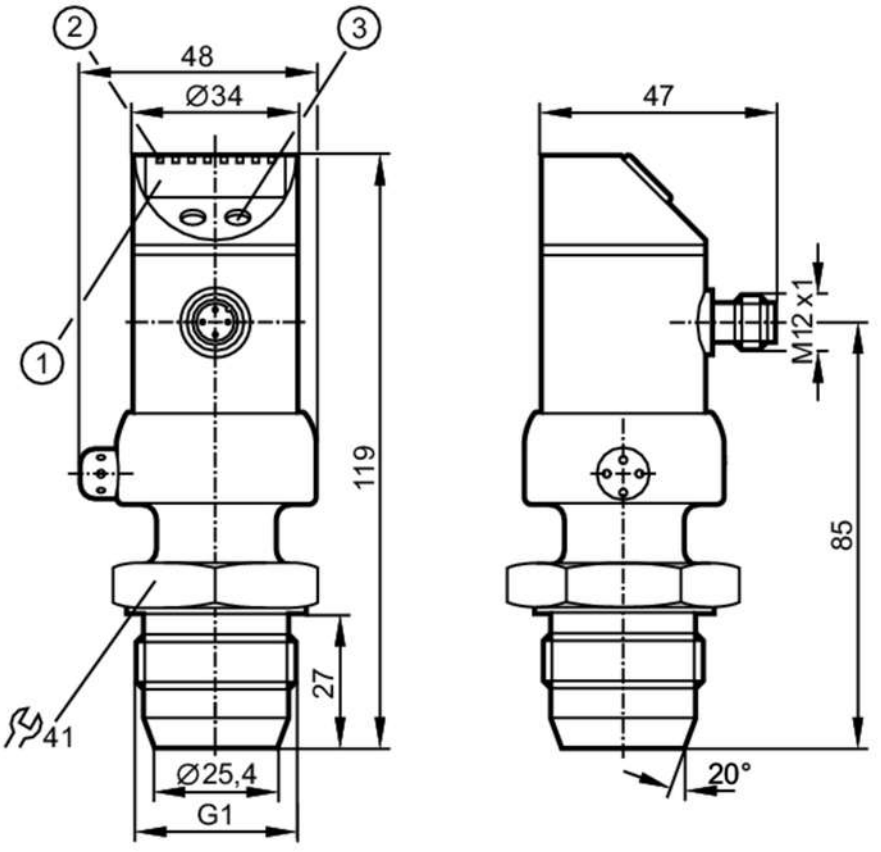

1 alphanumeric display 4-digit
2 status LEDs
3 programming button

EC 1935/2004 EHEDG Tested FCM

Product characteristics				
Number of inputs and outputs		Number of digital outputs: 2; Number of analogue outputs: 1		
Measuring range		-1...10 bar	-14.5...145 psi	-0.1...1 MPa
Process connection		threaded connection G 1 external thread sealing cone		
Application				
Special feature		Gold-plated contacts		
Application		flush mountable for the food and beverage industry		
Installation		freely rotatable housing 350°		
Media		viscous media and liquids with suspended particles; liquids and gases		
Medium temperature	[°C]	-25...125; (145 max. 1h)		
Min. bursting pressure		150 bar	2175 psi	15 MPa
Pressure rating		50 bar	725 psi	5 MPa
Type of pressure		relative pressure; vacuum		
No dead space		yes		
Electrical data				
Operating voltage	[V]	18...32 DC		
Current consumption	[mA]	< 50		

PIM694

Pressure sensor with diagnostic function for pumps

PIM010-REA01-KFPKG/US/ /P

Min. insulation resistance	[MΩ]	100; (500 V DC)
Protection class		III
Reverse polarity protection		yes
Power-on delay time	[s]	0.2
Integrated watchdog		yes

Inputs / outputs

Number of inputs and outputs	Number of digital outputs: 2; Number of analogue outputs: 1

Outputs

Total number of outputs		2
Output signal		switching signal; analogue signal; (configurable)
Electrical design		PNP
Number of digital outputs		2
Output function		normally open / normally closed; (parameterisable)
Max. voltage drop switching output DC	[V]	2
Permanent current rating of switching output DC	[mA]	250
Switching frequency DC	[Hz]	350
Notes on switching frequency	[Hz]	OUT2
Number of analogue outputs		1
Analogue current output	[mA]	4...20, invertible; (scalable)
Max. load	[Ω]	(Ub - 10 V) / 20 mA
Short-circuit protection		yes
Type of short-circuit protection		pulsed
Overload protection		yes

Measuring/setting range

Measuring range	-1...10 bar	-14.5...145 psi	-0.1...1 MPa
Set point SP	-0.98...10 bar	-14.2...145 psi	-0.098...1 MPa
Reset point rP	-1...9.98 bar	-14.5...144.7 psi	-0.1...0.998 MPa
Analogue start point	-1...7.25 bar	-14.5...105.1 psi	-0.1...0.725 MPa
Analogue end point	1.5...10 bar	21.8...145 psi	0.15...1 MPa
In steps of	0.01 bar	0.1 psi	0.001 MPa
Factory setting		OU1 = Fnc	OU2 = I
		ASP = 0.00 bar	AEP = 10.00 bar

Accuracy / deviations

Switch point accuracy	[% of the span]	< ± 0,2; (Turn down 1:1)
Repeatability	[% of the span]	< ± 0,1; (with temperature fluctuations < 10 K; Turn down 1:1)
Characteristics deviation	[% of the span]	< ± 0,2; (Turn down 1:1 , linearity, incl. hysteresis and repeatability , limit value setting to DIN EN IEC 62828-1)
Linearity deviation	[% of the span]	< ± 0,15; (Turn down 1:1)
Hysteresis deviation	[% of the span]	< ± 0,15; (Turn down 1:1)
Long-term stability		< ± 0,1; (Turn down 1:1; per year)

PIM694

Pressure sensor with diagnostic function for pumps

PIM010-REA01-KFPKG/US/ /P

[% of the span]		
Temperature coefficient zero point [% of the span / 10 K]		< ± 0,15; (0...70 °C)
Temperature coefficient span [% of the span / 10 K]		< ± 0,1; (0...70 °C)
Response times		
Response time [ms]		< 2.5
Damping process value dAP [s]		0...10
Damping for the analogue output dAA [s]		0...10
Step response time analogue output [ms]		0.2
Software / programming		
Parameter setting options		zero point; span
Operating conditions		
Ambient temperature [°C]		-25...80
Storage temperature [°C]		-40...100
Protection		IP 67; IP 69K
Tests / approvals		
EMC	EN 61000-4-2 ESD	4 kV CD / 8 kV AD
	EN 61000-4-3 HF radiated	10 V/m
	EN 61000-4-4 Burst	2 kV
	EN 61000-4-5 Surge	0,5/1 kV
	EN 61000-4-6 HF conducted	10 V
Shock resistance	DIN IEC 68-2-27	50 g (11 ms)
Vibration resistance	DIN IEC 68-2-6	20 g (10...2000 Hz)
MTTF [years]		188
Mechanical data		
Weight [g]		455.5
Housing		cylindrical
Dimensions [mm]		Ø 34 / L = 119
Materials		stainless steel (316L/1.4404); PC; PBT; PEI; FKM; PTFE
Materials (wetted parts)		ceramics (99.9 % Al2O3); stainless steel (316L/1.4435); surface characteristics: Ra < 0,4 / Rz 4; PTFE
Min. pressure cycles		100 million
Process connection		threaded connection G 1 external thread sealing cone
Displays / operating elements		
Display	Display unit	4 x LED, green
	switching status	2 x LED, yellow
	function display	alphanumeric display, 4-digit
	measured values	alphanumeric display, 4-digit

PIM694

Pressure sensor with diagnostic function for pumps

PIM010-REA01-KFPKG/US/ /P

Remarks	
Remarks	pump diagnosis for pumps with constant rotational speed (+/- 10 % deviation of the taught rotational speed)
	speed range 40...3000 U/min
	minimum pressure for pump diagnosis 0,5 bar
	The 3-A qualification is only valid if adapters with 3-A qualification are used for installation.
Pack quantity	1 pcs.

Electrical connection

Connector: 1 x M12; coding: A; Contacts: gold-plated

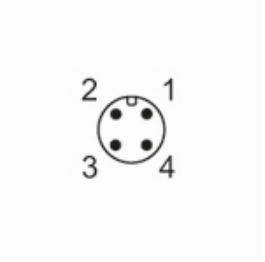

Connection

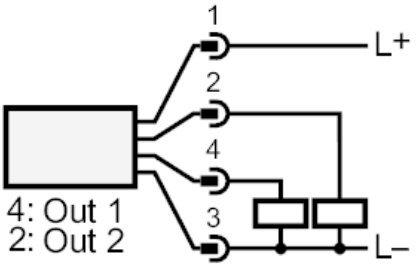

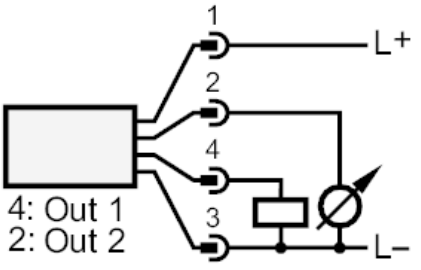

OUT1	pump diagnosis
OUT2	pressure monitoring