# E10802

## Y-splitter

ZDO2F030MSS0000-00STGH040MSS

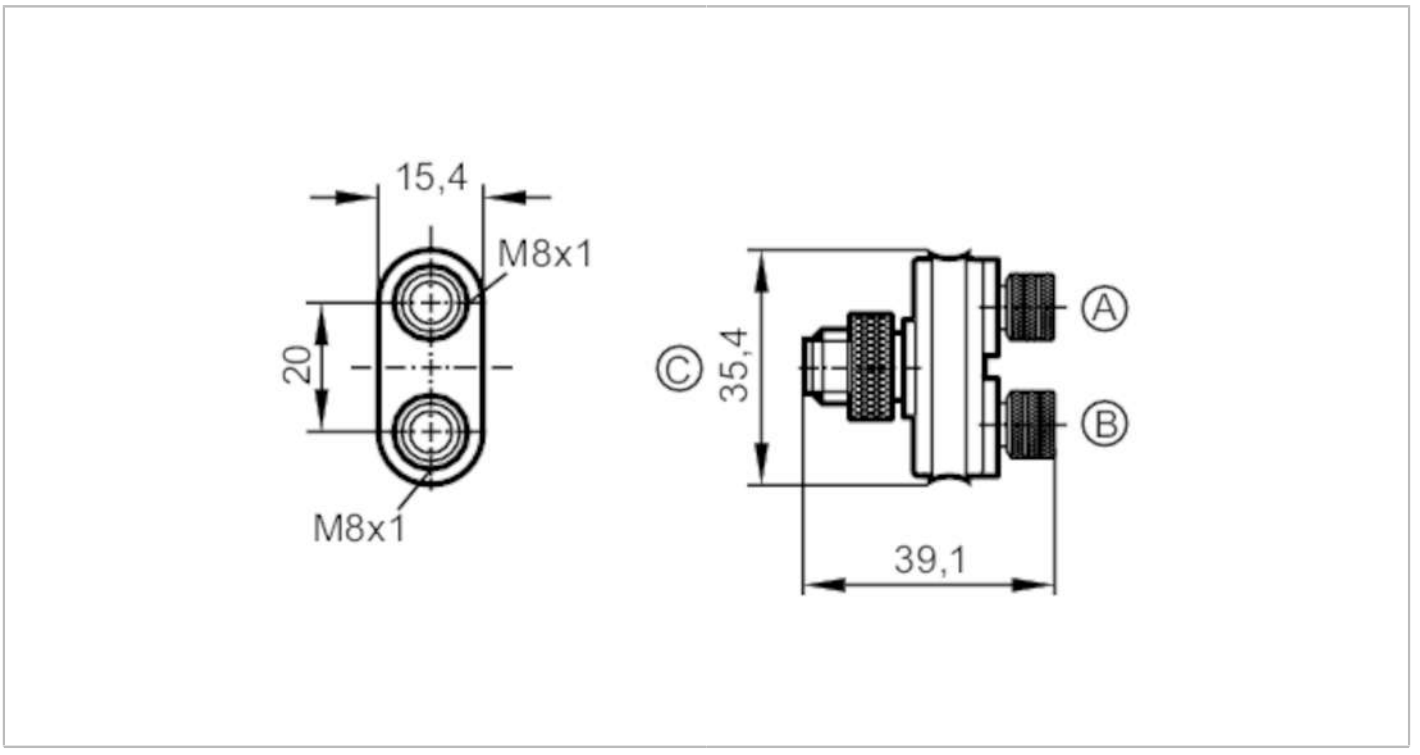


| | | |
|---|---|---|
| **Application** | | |
| Special feature | | Free from silicone; Gold-plated contacts |
| Free from silicone | | yes |
| **Electrical data** | | |
| Operating voltage | [V] | < 60 DC |
| Protection class | | III |
| Max. current load per module/slot | [A] | 3 |
| Max. current load total | [A] | 3 |
| **Operating conditions** | | |
| Ambient temperature | [°C] | -25...90 |
| Protection | | IP 67 |
| **Mechanical data** | | |
| Weight | [g] | 21.8 |
| Dimensions | [mm] | 15.4 x 35.4 x 39.1 |
| Materials | | PUR |
| Moulded-body material | | PUR |
| Material nut | | brass, nickel-plated |
| Connector type | | M8 |
| **Remarks** | | |
| Pack quantity | | 1 pcs. |

# E10802

## Y-splitter

ZDO2F030MSS0000-00STGH040MSS

### Electrical connection - plug

Connector: 1 x M12; coding: A; Moulded body: PUR; Locking: brass, nickel-plated; Contacts: gold-plated

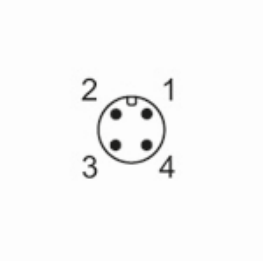


### Electrical connection

Connection

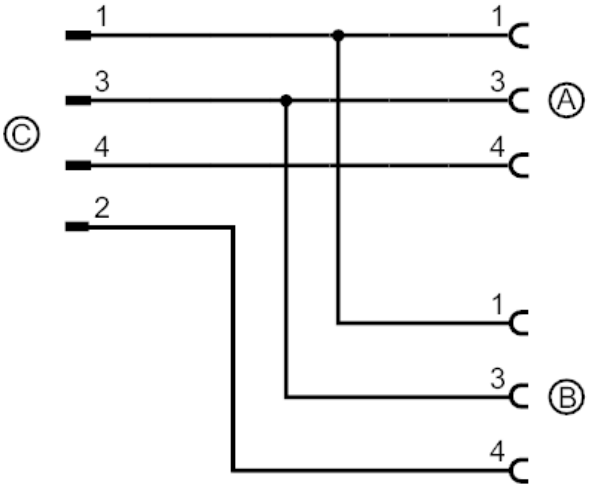


### Electrical connection - socket

Connector: 2 x M8; coding: A; Moulded body: PUR; Locking: brass, nickel-plated; Contacts: gold-plated

