Features/Benefits

- *Broad range of products*
- *Extra long life cycles available*
- *Variety of operating forces and heights*
- *Thru-hole and SMT options*
- *Custom design available*

Typical Applications

- *Consumer electronics*
- *Computer peripherals*
- *Household appliances*
- *Audio & visual equipment*
- *Automotive*

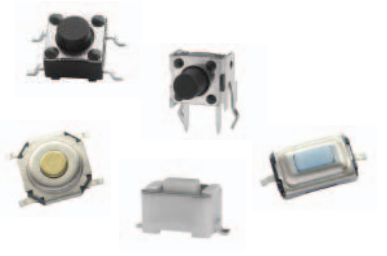

How To Order

Our easy build-a-switch concept allows you to mix and match options to create the switch you need. To order, select desired option from each category and place it in the appropriate box.

R S | | | | | 0 5 | | | |

Series
014
022
044

Actuator Code
B Square shape
R Cylinder shape

Actuator Length
A 4.3 mm
B 5 mm
C 7 mm
D 9.5 mm
E 8 mm
F 7.3 mm
G 13.5 mm
H 12.5 mm

Auxiliary Code
SMA8.8 8.8mm SMT
SMA10 10mm SMT
RT Tape & reel packaging

Operating Force/Actuator Color/Operating Life

H	100±30	White	100,000
0	130±30	Grey	100,000
1	160±30	Black	100,000
3	250±50	Ivory	50,000
4	300±50	Black	50,000
5	500±100	Grey	50,000

RS-014B05 Square Shape Actuator

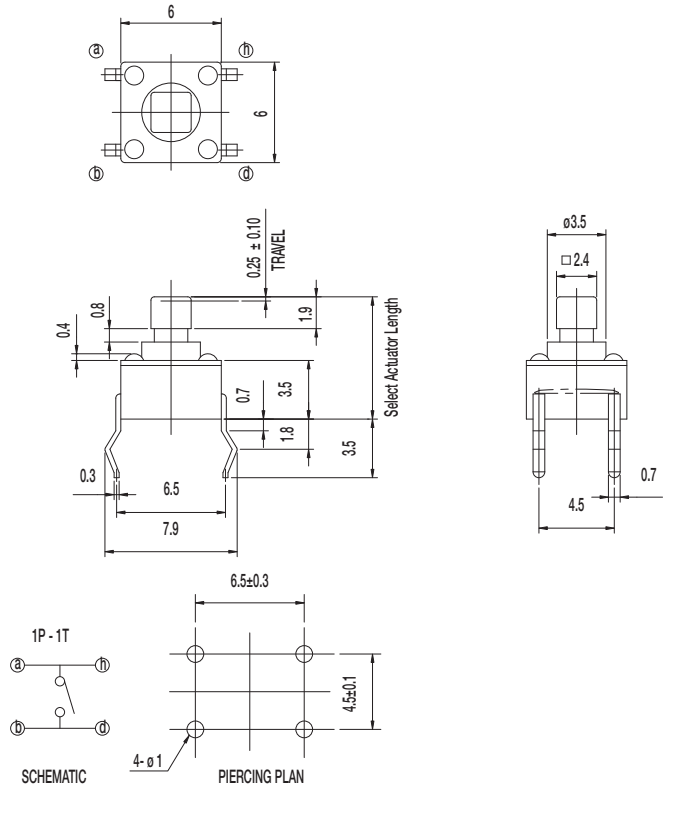

Specifications

CONTACT RATING: 50mA @ 12 VDC

INITIAL CONTACT RESISTANCE: 100 m ohms max.

INSULATION RESISTANCE: 100 M ohms min.

DIELECTRIC STRENGTH: 250 V AC (50-60 Hz) between open terminals and between the frame and terminal.

RELEASING FORCE: 20gf min. (0.196N min.)

TRAVEL: 0.25 ± 0.10 mm

OPERATING TEMPERATURE: -20˚C to 70˚C

Materials

KNOB: PA

COVER: SPCC

HOUSING: PA

SPRING PLATE: Silver clad

TERMINAL: Silver plated

NOTE: Specifications and materials listed above are for switches with standard options. For information on specific and custom switches, please contact Customer Service.

RS Series
Tact Switches

NEW!

RS-014R05 Cylinder Shape Actuator

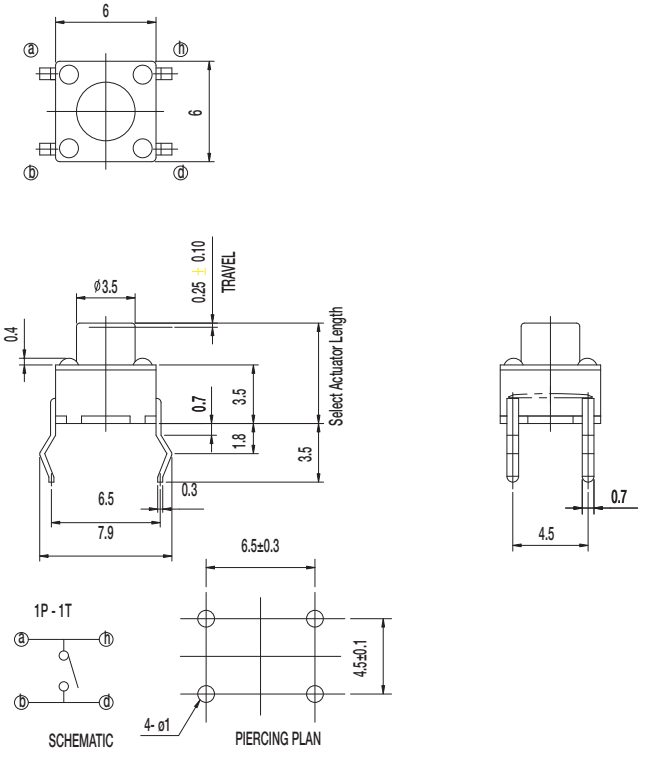

Specifications

CONTACT RATING: 50mA @ 12 VDC

INITIAL CONTACT RESISTANCE: 100 m ohms max.

INSULATION RESISTANCE: 100 M ohms min.

DIELECTRIC STRENGTH: 250 V AC (50-60 Hz) between open terminals and between the frame and terminal.

RELEASING FORCE: 20gf min. (0.196N min.)

TRAVEL: 0.25 ± 0.10 mm

OPERATING TEMPERATURE: -20˚C to 70˚C

Materials

KNOB: PA

COVER: SPCC

HOUSING: PA

SPRING PLATE: Silver clad

TERMINAL: Silver plated

NOTE: Specifications and materials listed above are for switches with standard options. For information on specific and custom switches, please contact Customer Service.

RS-014B05 SMA Square Shape Actuator SMT

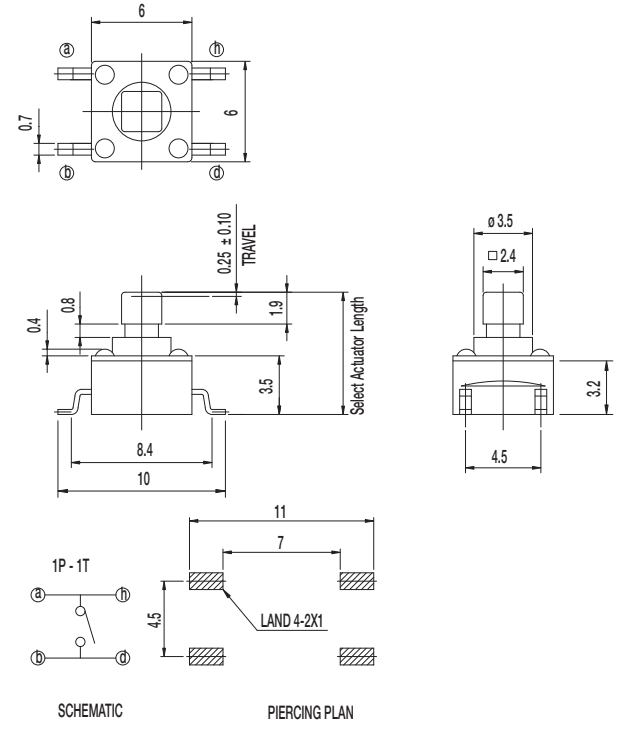

Specifications

CONTACT RATING: 50mA @ 12 VDC

INITIAL CONTACT RESISTANCE: 100 m ohms max.

INSULATION RESISTANCE: 100 M ohms min.

DIELECTRIC STRENGTH: 250 V AC (50-60 Hz) between open terminals and between the frame and terminal.

RELEASING FORCE: 20gf min. (0.2N min.)

TRAVEL: 0.25 ± 0.10 mm

OPERATING TEMPERATURE: -20˚C to 70˚C

Materials

KNOB: PA

COVER: SPTE

HOUSING: PA

SPRING PLATE: Silver clad

TERMINAL: Silver plated

NOTE: Specifications and materials listed above are for switches with standard options. For information on specific and custom switches, please contact Customer Service.

RS-014R05 SMA RT Cylinder Shape Acuator SMT

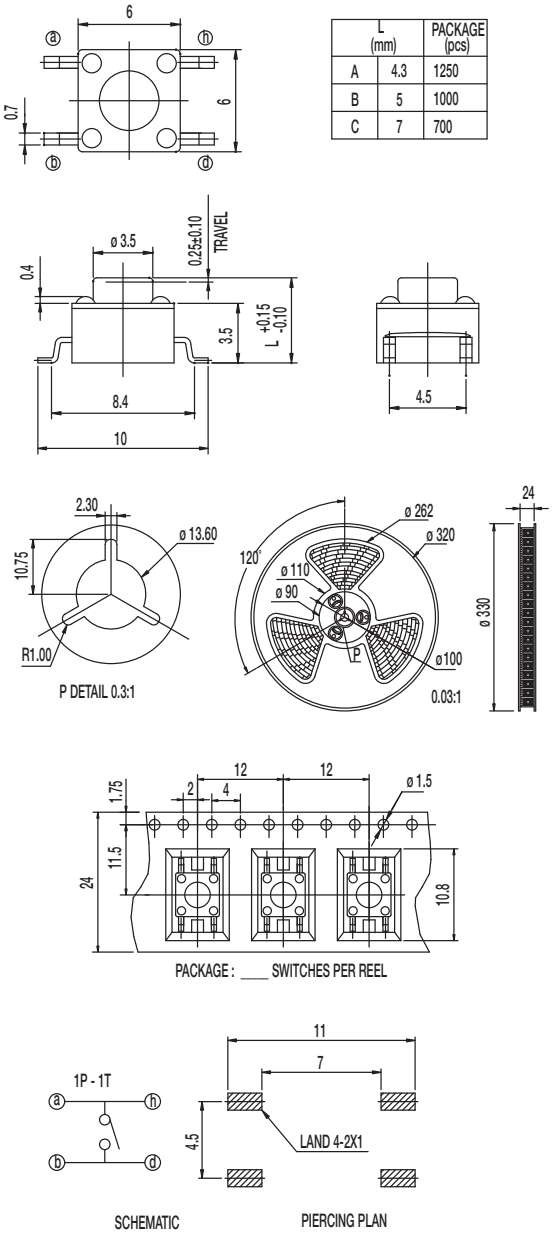

L (mm)		PACKAGE (pcs)
A	4.3	1250
B	5	1000
C	7	700

Specifications

CONTACT RATING: 50mA @ 12 VDC

INITIAL CONTACT RESISTANCE: 100 m ohms max.

INSULATION RESISTANCE: 100 M ohms min.

DIELECTRIC STRENGTH: 250 V AC (50-60 Hz) between open terminals and between the frame and terminal.

OPERATING LIFE: 100,000 cycles with load

OPERATING FORCE: 160 ± 30 gf

RELEASING FORCE: 20gf min. (0.196N min.)

TRAVEL: 0.25 ± 0.10 mm

OPERATING TEMPERATURE: -20˚C to 70˚C

Materials

KNOB: PA

COVER: SPTE

HOUSING: PA

SPRING PLATE: Silver clad

TERMINAL: Silver plated

NOTE: Specifications and materials listed above are for switches with standard options. For information on specific and custom switches, please contact Customer Service.

RS Series
Tact Switches

NEW!

RS-044R05 Cylinder Shape Actuator THT

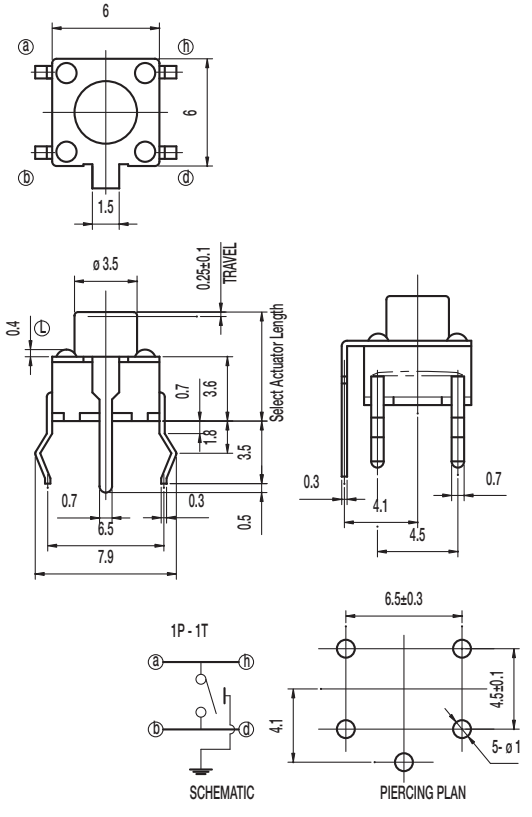

Specifications

CONTACT RATING: 50mA @ 12 VDC

INITIAL CONTACT RESISTANCE: 100 m ohms max.

INSULATION RESISTANCE: 100 M ohms min.

DIELECTRIC STRENGTH: 250 V AC (50-60 Hz) between open terminals and between the frame and terminal.

RELEASING FORCE: 20gf min. (0.2N min.)

TRAVEL: 0.25 ± 0.10 mm

OPERATING TEMPERATURE: -20˚C to 70˚C

Materials

KNOB: PBT

COVER: SPTE

HOUSING: PBT

SPRING PLATE: Silver clad

TERMINAL: Silver plated

NOTE: Specifications and materials listed above are for switches with standard options. For information on specific and custom switches, please contact Customer Service.

RS-044R05 SMA Cylinder Shape Actuator SMT

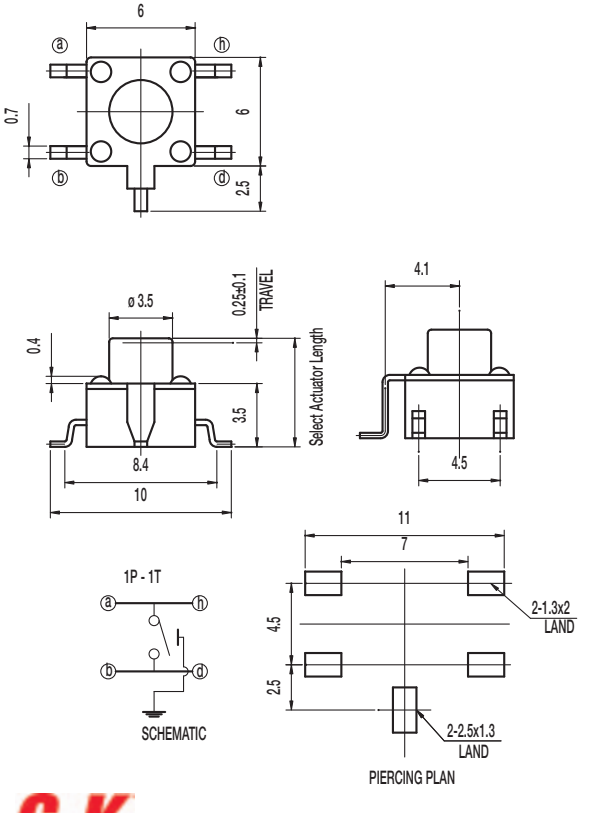

Specifications

CONTACT RATING: 50mA @ 12 VDC

INITIAL CONTACT RESISTANCE: 100 m ohms max.

INSULATION RESISTANCE: 100 M ohms min.

DIELECTRIC STRENGTH: 250 V AC (50-60 Hz) between open terminals and between the frame and terminal.

RELEASING FORCE: 20gf min. (0.2N min.)

TRAVEL: 0.25 ± 0.10 mm

OPERATING TEMPERATURE: -20˚C to 70˚C

Materials

KNOB: PA

COVER: SPTE

HOUSING: PA

SPRING PLATE: Silver clad

TERMINAL: Silver plated

NOTE: Specifications and materials listed above are for switches with standard options. For information on specific and custom switches, please contact Customer Service.

Dimensions are shown: mm
Specifications and dimensions subject to change

RS-022R05

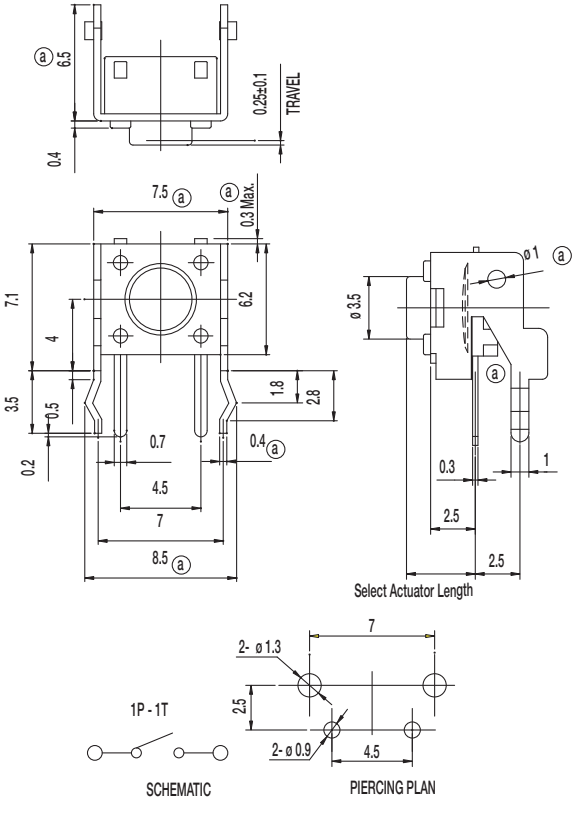

Specifications

CONTACT RATING: 50mA @ 12 VDC

INITIAL CONTACT RESISTANCE: 100 m ohms max.

INSULATION RESISTANCE: 100 M ohms min.

DIELECTRIC STRENGTH: 250 V AC (50-60 Hz) between open terminals and between the frame and terminal.

RELEASING FORCE: 20gf min. (0.196N min.)

TRAVEL: 0.25 ± 0.10 mm

OPERATING TEMPERATURE: -20˚C to 80˚C

Materials

KNOB: PA

COVER: SPTE

HOUSING: PA

SPRING PLATE: Silver clad

TERMINAL: Silver plated

NOTE: Specifications and materials listed above are for switches with standard options. For information on specific and custom switches, please contact Customer Service.

RS 032 Series
Tact Switches

NEW!



R S | | | | | 0 5 | | | |

Series
032

Actuator Code
G

Actuator Length
A 4.3 mm
B 5 mm
C 5.5 mm

Operating Force
1 180±50 gf
3 250±50 gf

Auxiliary Code
SM SMT
NH SMT
RT Tape & reel packaging
EM

RS-032G05

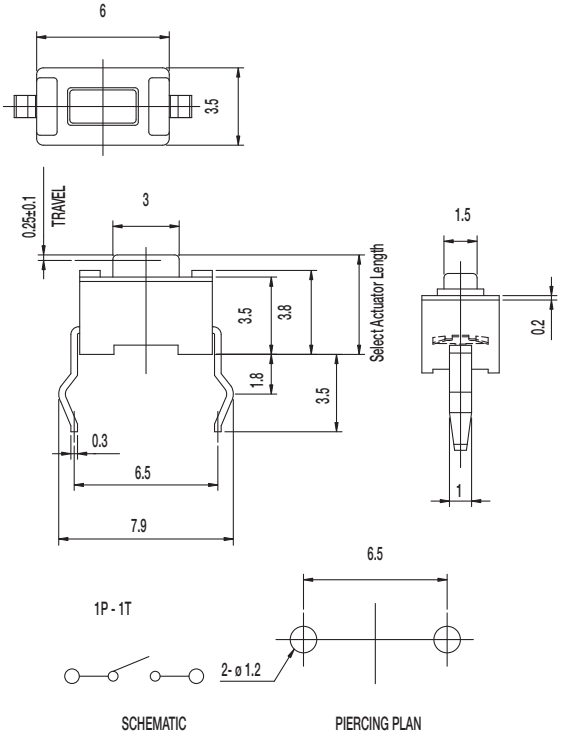

Specifications

CONTACT RATING: 50mA @ 12 VDC

INITIAL CONTACT RESISTANCE: 100 m ohms max.

INSULATION RESISTANCE: 100 M ohms min.

DIELECTRIC STRENGTH: 250 V AC (50-60 Hz) between open terminals and between the frame and terminal.

RELEASING FORCE: 20gf min. (0.196N min.)

TRAVEL: 0.25 ± 0.10 mm

OPERATING TEMPERATURE: -20˚C to 70˚C

Materials

KNOB: PA46

COVER: SUS

HOUSING: PA46

SPRING PLATE: Silver clad

TERMINAL: Silver plated

NOTE: Specifications and materials listed above are for switches with standard options. For information on specific and custom switches, please contact Customer Service.

RS-032G05 NH RT

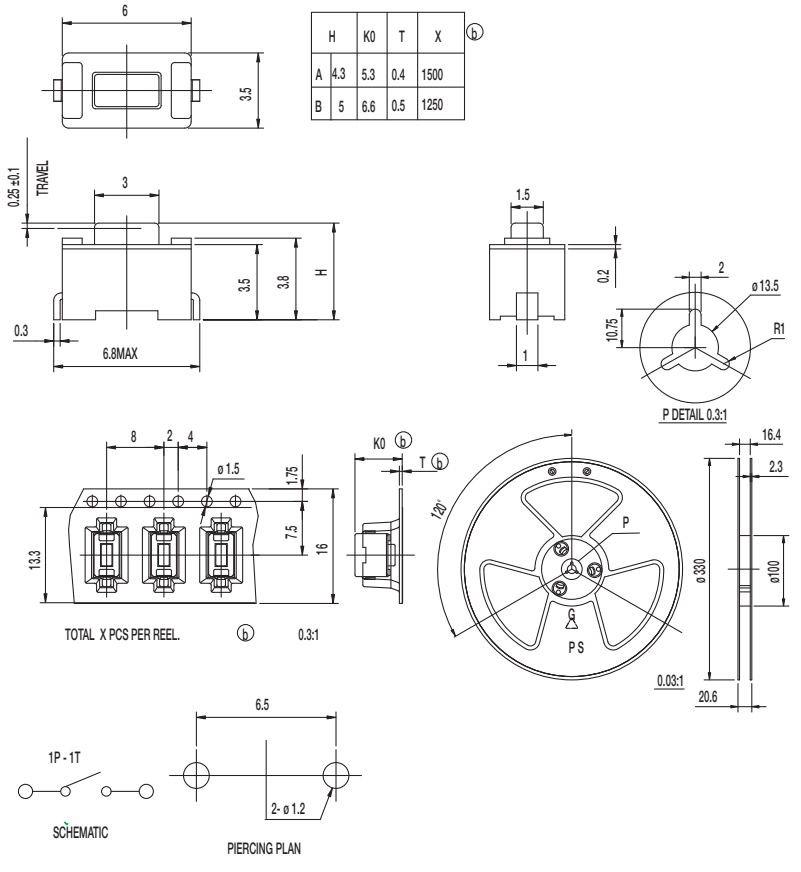

Specifications

CONTACT RATING: 50mA @ 12 VDC
INITIAL CONTACT RESISTANCE: 100 m ohms max.
INSULATION RESISTANCE: 100 M ohms min.
DIELECTRIC STRENGTH: 250 V AC (50-60 Hz) between open terminals and between the frame and terminal.
OPERATING LIFE: 30,000 cycles with load
OPERATING FORCE: 180 ± 50gf
RELEASING FORCE: 20gf min. (0.2N min.)
TRAVEL: 0.25 ± 0.10 mm
OPERATING TEMPERATURE: -20˚C to 70˚C

Materials

KNOB: PA
COVER: SUS
HOUSING: PA
SPRING PLATE: Silver clad
TERMINAL: Silver plated

NOTE: Specifications and materials listed above are for switches with standard options. For information on specific and custom switches, please contact Customer Service.

RS-032G05 SM RT

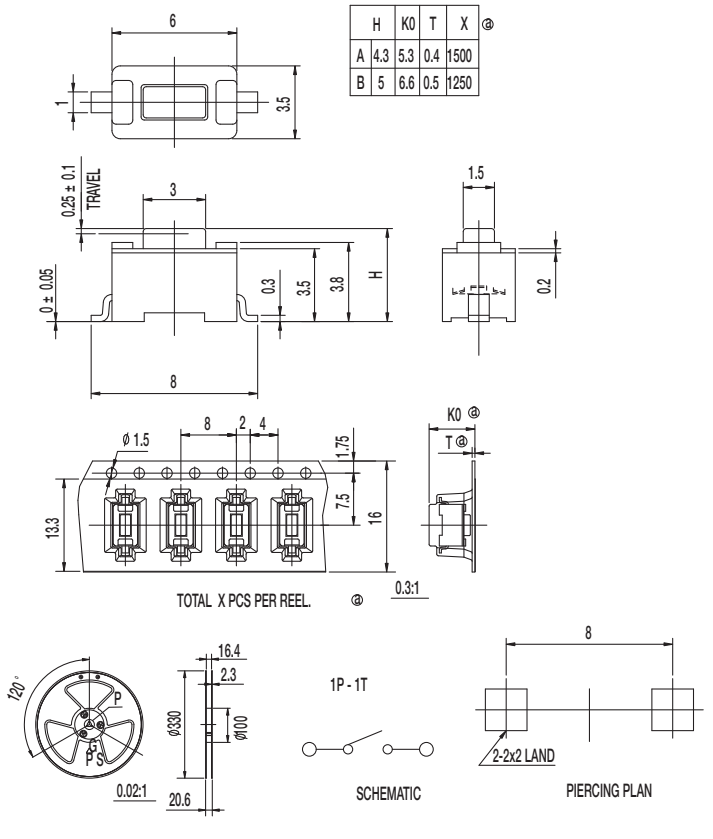

Specifications

CONTACT RATING: 50mA @ 12 VDC
INITIAL CONTACT RESISTANCE: 100 m ohms max.
INSULATION RESISTANCE: 100 M ohms min.
DIELECTRIC STRENGTH: 250 V AC (50-60 Hz) between open terminals and between the frame and terminal.
OPERATING LIFE: 30,000 cycles with load
OPERATING FORCE: 180 ± 50gf
RELEASING FORCE: 20gf min. (0.2N min.)
TRAVEL: 0.25 ± 0.10 mm
OPERATING TEMPERATURE: -20˚C to 70˚C

Materials

KNOB: PA
COVER: SUS
HOUSING: PA
SPRING PLATE: Silver clad
TERMINAL: Silver plated

NOTE: Specifications and materials listed above are for switches with standard options. For information on specific and custom switches, please contact Customer Service.

NEW!

RS-032G05 SM EM RT

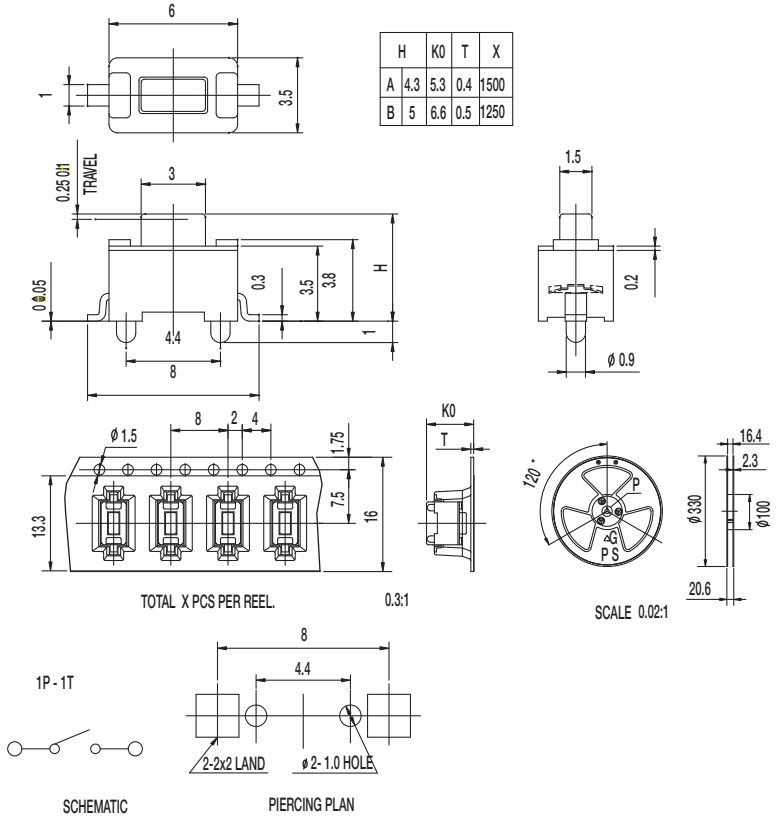

Specifications

CONTACT RATING: 50mA @ 12 VDC

INITIAL CONTACT RESISTANCE: 100 m ohms max.

INSULATION RESISTANCE: 100 M ohms min.

DIELECTRIC STRENGTH: 250 V AC (50-60 Hz) between open terminals and between the frame and terminal.

OPERATING LIFE: 30,000 cycles with load

OPERATING FORCE: 180 ± 50gf

RELEASING FORCE: 20gf min. (0.2N min.)

TRAVEL: 0.25 ± 0.10 mm

OPERATING TEMPERATURE: -20˚C to 70˚C

Materials

KNOB: PA

COVER: SUS

HOUSING: PA

SPRING PLATE: Silver clad

TERMINAL: Silver plated

NOTE: Specifications and materials listed above are for switches with standard options. For information on specific and custom switches, please contact Customer Service.



R S | | | | | 0 5 | | | |

Series
187

Actuator Code
R cylinder shape
N flat - no knob

Actuator Length
A 1.6 mm
B 1.5mm
C 1.7 mm
D 3.7 mm
E 4.3 mm

Operating Force
1 180±50 gf
2 160±30 gf
3 250±50 gf
4 350±50 gf

Auxiliary Code
DS
MT SMT
RT Tape & reel packaging

RS-187N05 DS RT

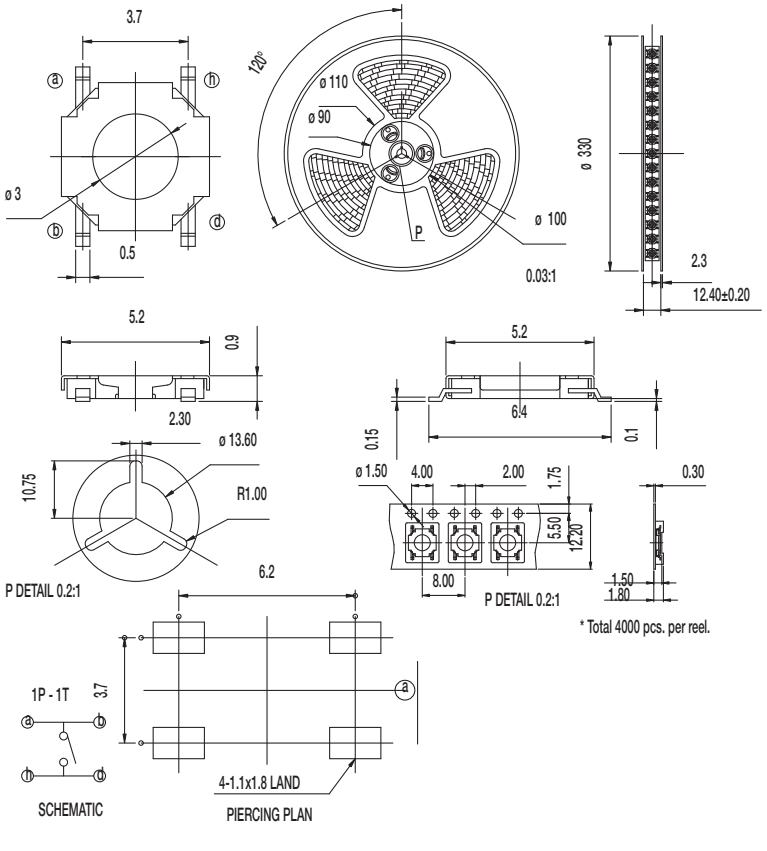

Specifications

CONTACT RATING: 50mA @ 12 VDC
INITIAL CONTACT RESISTANCE: 100 m ohms max.
INSULATION RESISTANCE: 100 M ohms min.
DIELECTRIC STRENGTH: 250 V AC (50-60 Hz) between open terminals and between the frame and terminal.
OPERATING LIFE: 100,000 cycles with load
OPERATING FORCE: 180 ± 50gf (1.76 ± 0.49N)
RELEASING FORCE: 20gf min. (0.2N min.)
TRAVEL: 0.25 ± 0.10 mm
OPERATING TEMPERATURE: -20°C to 70°C

Materials

COVER: SUS
HOUSING: PA
SPRING PLATE: Silver clad
TERMINAL: Silver plated

NOTE: Specifications and materials listed above are for switches with standard options. For information on specific and custom switches, please contact Customer Service.

RS Series
Tact Switches

NEW!

RS-187R05 DS MT RT

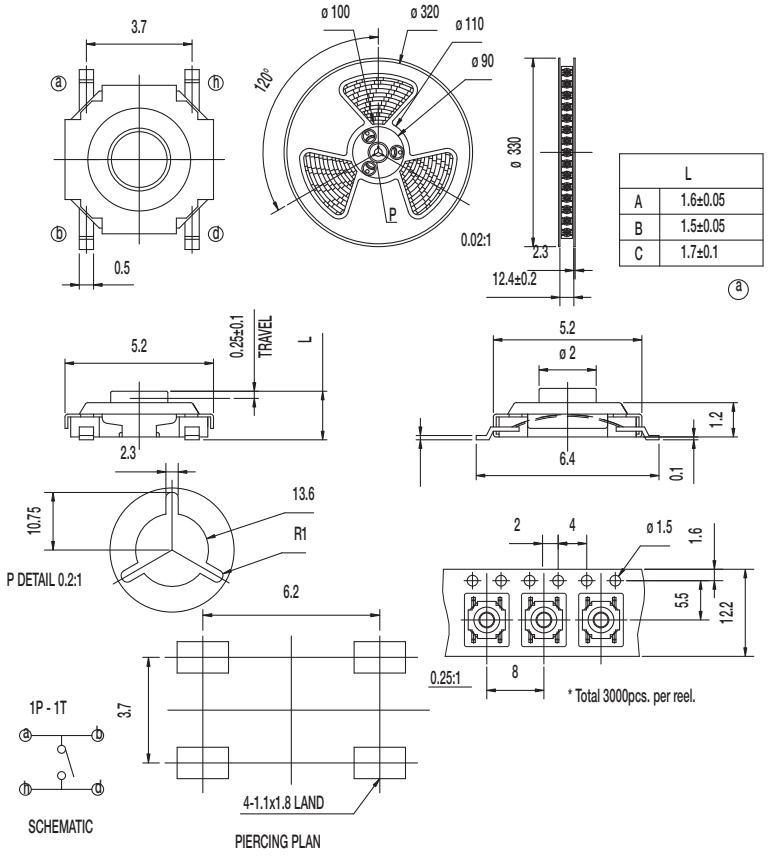

	L
A	1.6±0.05
B	1.5±0.05
C	1.7±0.1

Specifications

CONTACT RATING: 50mA @ 12 VDC
INITIAL CONTACT RESISTANCE: 100 m ohms max.
INSULATION RESISTANCE: 100 M ohms min.
DIELECTRIC STRENGTH: 250 V AC (50-60 Hz) between open terminals and between the frame and terminal.
OPERATING LIFE: 50,000 cycles with load
OPERATING FORCE: 180 ± 50gf (1.76 ± 0.49N)
RELEASING FORCE: 20gf min. (0.2N min.)
TRAVEL: 0.25 ± 0.10 mm
OPERATING TEMPERATURE: -20˚C to 70˚C

Materials

COVER: SUS
HOUSING: PA
SPRING PLATE: Silver clad
TERMINAL: Silver plated

NOTE: Specifications and materials listed above are for switches with standard options. For information on specific and custom switches, please contact Customer Service.

RS-187R05B DS-MT U RT

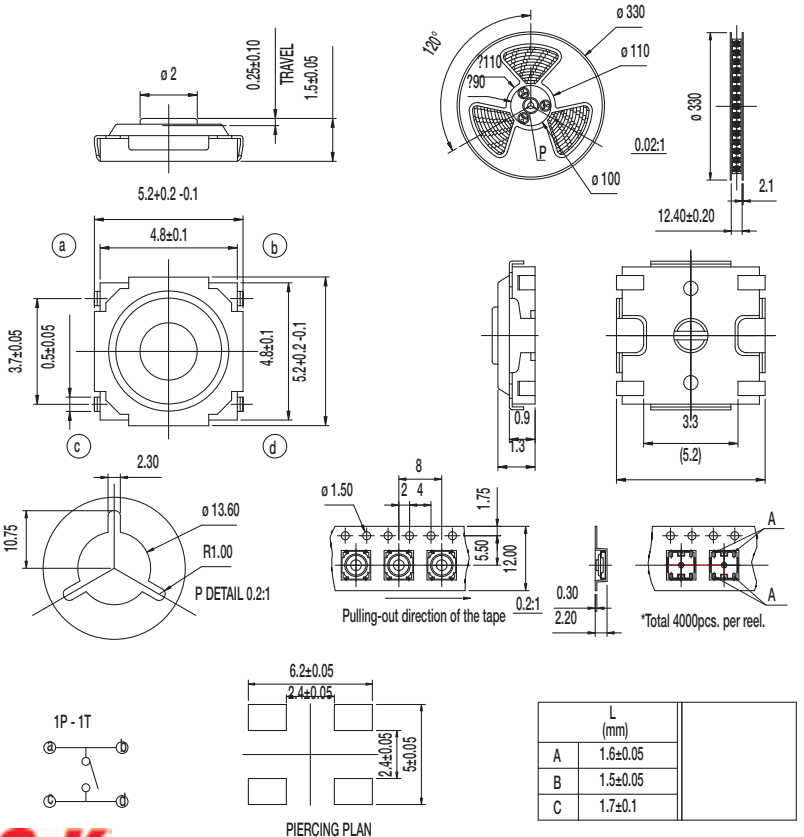

	L (mm)
A	1.6±0.05
B	1.5±0.05
C	1.7±0.1

Specifications

CONTACT RATING: 50mA @ 12 VDC
INITIAL CONTACT RESISTANCE: 100 m ohms max.
INSULATION RESISTANCE: 100 M ohms min.
DIELECTRIC STRENGTH: 250 V AC (50-60 Hz) between open terminals and between the frame and terminal.
OPERATING LIFE: 50,000 cycles with load
OPERATING FORCE: 180 ± 50gf (1.764 ± 0.49N)
RELEASING FORCE: 20gf min. (0.2N min.)
TRAVEL: 0.25 ± 0.10 mm
OPERATING TEMPERATURE: -20˚C to 70˚C

Materials

KNOB: C2680R
COVER: SUS
HOUSING: PA
SPRING PLATE: Silver clad
TERMINAL: Silver plated

NOTE: Specifications and materials listed above are for switches with standard options. For information on specific and custom switches, please contact Customer Service.

Dimensions are shown: mm
Specifications and dimensions subject to change



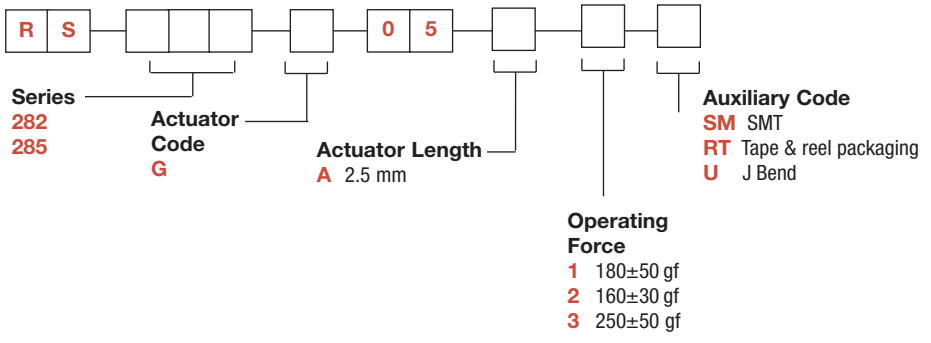

RS-282G05 SM RT

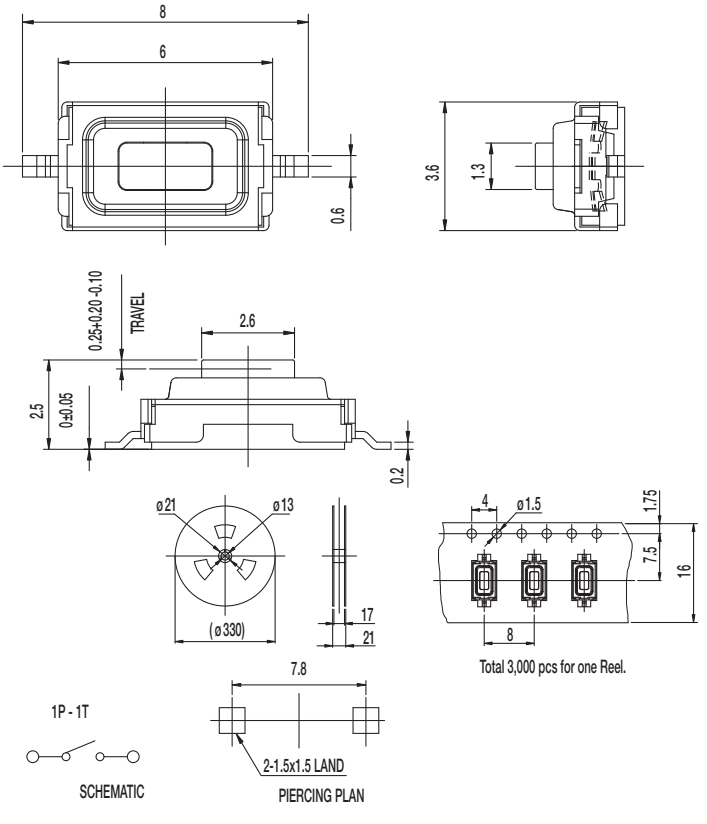

Specifications

CONTACT RATING: 50mA @ 12 VDC

INITIAL CONTACT RESISTANCE: 100 m ohms max.

INSULATION RESISTANCE: 100 M ohms min.

DIELECTRIC STRENGTH: 250 V AC (50-60 Hz) between open terminals and between the frame and terminal.

OPERATING LIFE: 50,000 cycles with load

OPERATING FORCE: 250 ± 50gf

RELEASING FORCE: 20gf min. (0.2N min.)

TRAVEL: 0.25 ± 0.10 mm

OPERATING TEMPERATURE: -20˚C to 70˚C

Materials

KNOB: PA

COVER: SUS

HOUSING: PA

SPRING PLATE: Silver clad

TERMINAL: Silver plated

NOTE: Specifications and materials listed above are for switches with standard options. For information on specific and custom switches, please contact Customer Service.

RS Series
Tact Switches

NEW!

RS-285G05 SM RT

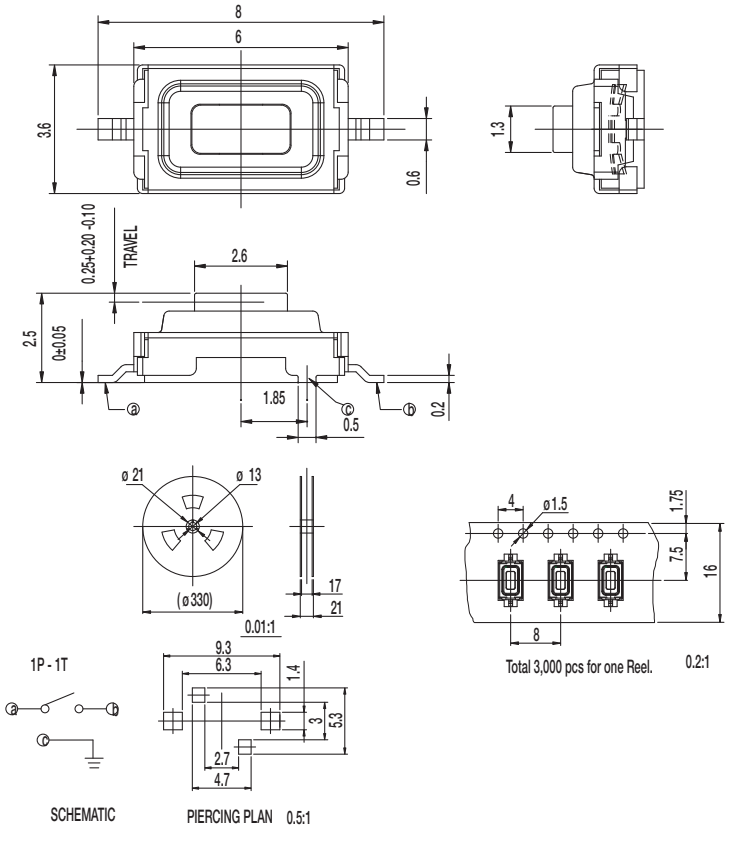

Specifications

CONTACT RATING: 50mA @ 12 VDC

INITIAL CONTACT RESISTANCE: 100 m ohms max.

INSULATION RESISTANCE: 100 M ohms min.

DIELECTRIC STRENGTH: 250 V AC (50-60 Hz) between open terminals and between the frame and terminal.

OPERATING LIFE: 50,000 cycles with load

OPERATING FORCE: 180 ± 50gf (1.76 ± 0.49N)

RELEASING FORCE: 20gf min. (0.2N min.)

TRAVEL: 0.25 ± 0.10 mm

OPERATING TEMPERATURE: -20˚C to 70˚C

Materials

KNOB: PA

COVER: SUS

HOUSING: PA

SPRING PLATE: Silver clad

TERMINAL: Silver plated

NOTE: Specifications and materials listed above are for switches with standard options. For information on specific and custom switches, please contact Customer Service.

RS-285G05 U RT

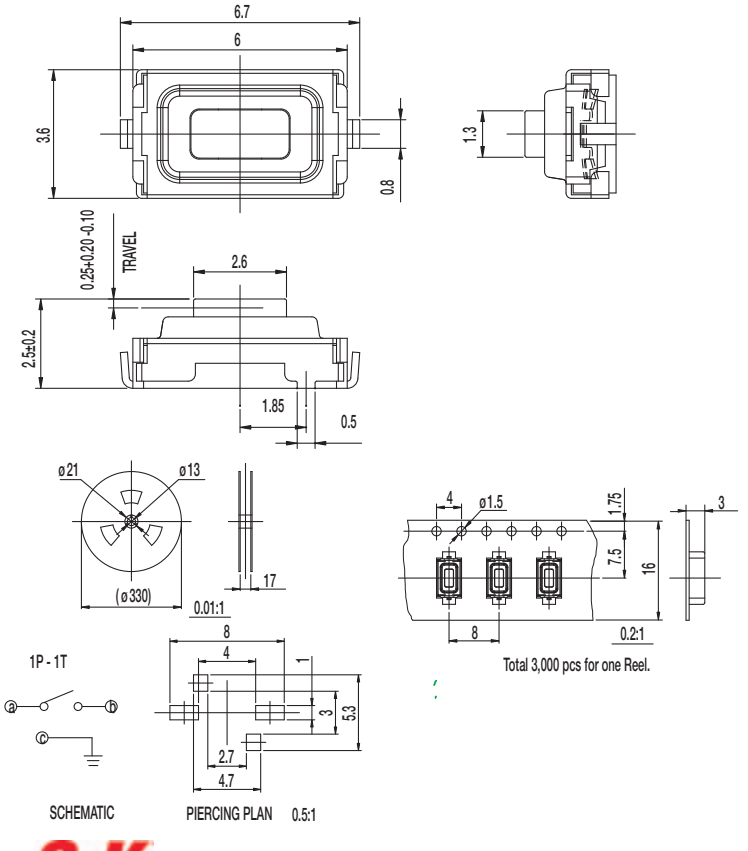

Specifications

CONTACT RATING: 50mA @ 12 VDC

INITIAL CONTACT RESISTANCE: 100 m ohms max.

INSULATION RESISTANCE: 100 M ohms min.

DIELECTRIC STRENGTH: 250 V AC (50-60 Hz) between open terminals and between the frame and terminal.

OPERATING LIFE: 100,000 cycles with load

OPERATING FORCE: 160 ± 50gf

RELEASING FORCE: 50gf min.

TRAVEL: 0.25 ± 0.10 mm

OPERATING TEMPERATURE: -20˚C to 70˚C

Materials

COVER: SUS

HOUSING: PA

SPRING PLATE: Silver clad

TERMINAL: Silver plated

NOTE: Specifications and materials listed above are for switches with standard options. For information on specific and custom switches, please contact Customer Service.

Dimensions are shown: mm
Specifications and dimensions subject to change

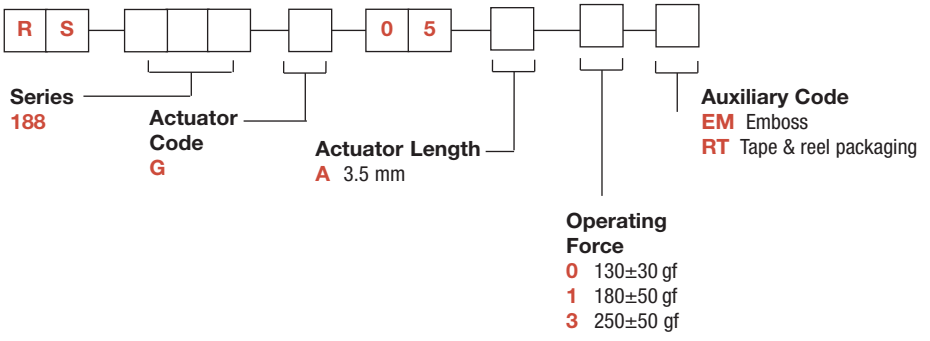

RS-188G05A EM RT

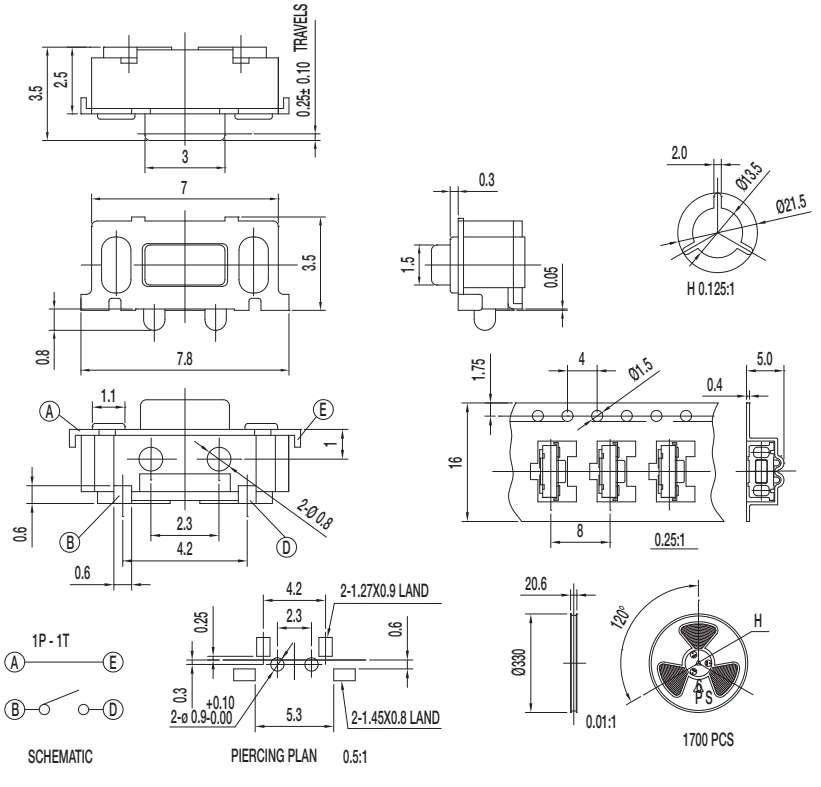

Specifications

CONTACT RATING: 50mA @ 12 VDC

INITIAL CONTACT RESISTANCE: 100 m ohms max.

INSULATION RESISTANCE: 100 M ohms min.

DIELECTRIC STRENGTH: 250 V AC (50-60 Hz) between open terminals and between the frame and terminal.

OPERATING LIFE: 30,000 cycles with load

OPERATING FORCE: 180 ± 50gf

RELEASING FORCE: 20gf min. (0.2N min.)

TRAVEL: 0.25 ± 0.10 mm

OPERATING TEMPERATURE: -20˚C to 70˚C

Materials

KNOB: PA

COVER: SPTE

HOUSING: PA

SPRING PLATE: SUS

TERMINAL: Silver plated

NOTE: Specifications and materials listed above are for switches with standard options. For information on specific and custom switches, please contact Customer Service.