E40209

Protective cover

COVER SHEET

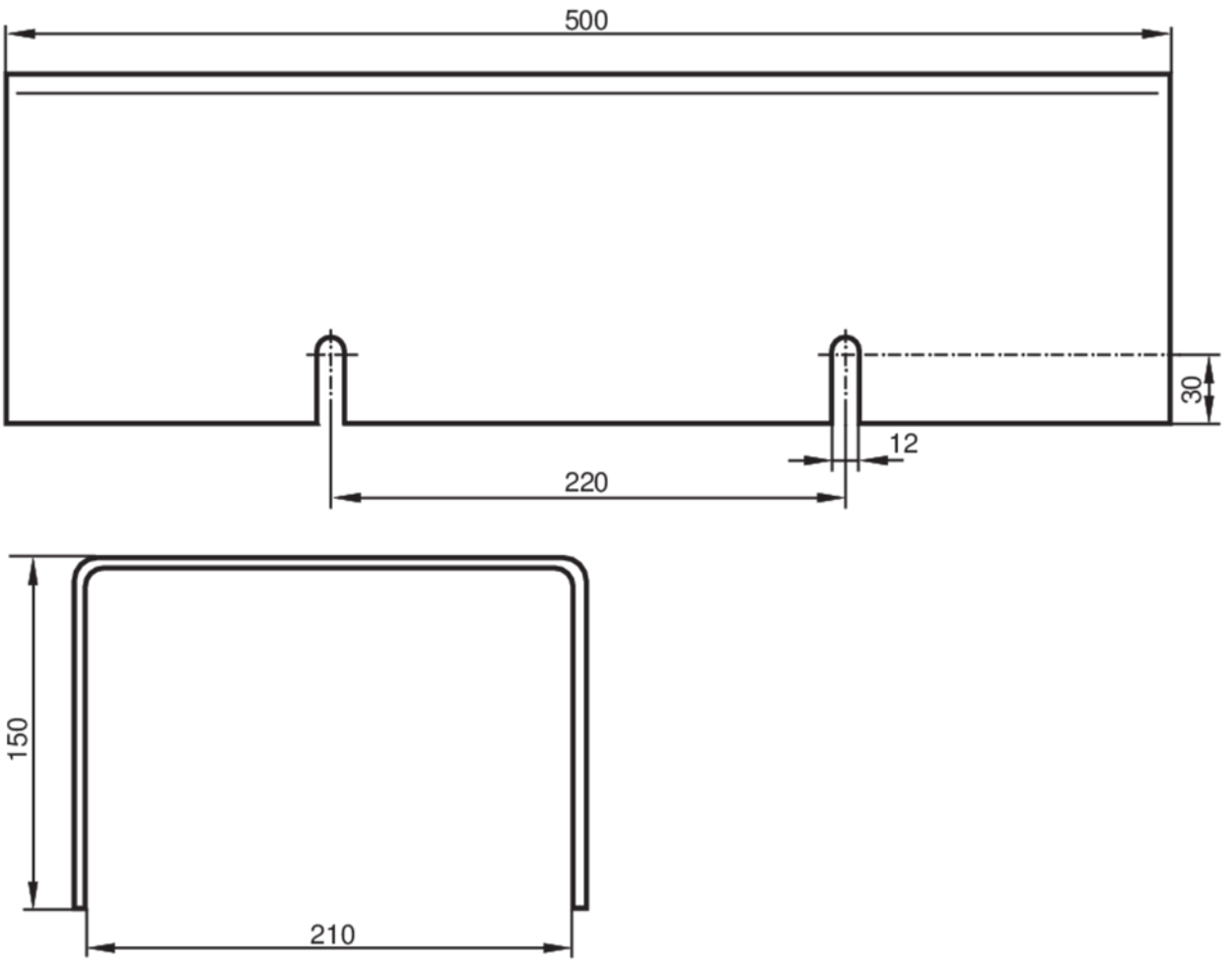

Mechanical data		
Weight	[g]	1730
Materials		AlMg3

Remarks	
Pack quantity	1 pcs.