3304 A-2RS1TN9/MT33

Popular item
SKF Explorer

Dimensions

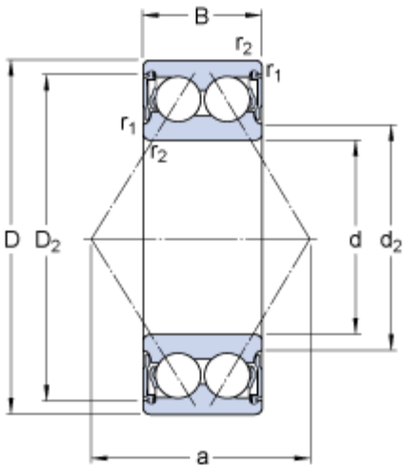

d		20	mm
D		52	mm
B		22.2	mm
d_2	≈	29.9	mm
D_2	≈	43.95	mm
$r_{1,2}$	min.	1.1	mm
a		30	mm

Abutment dimensions

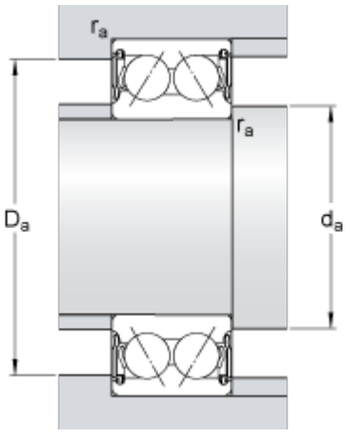

d_a	min.	27	mm
d_a	max.	29.5	mm
D_a	max.	45	mm
r_a	max.	1	mm

Calculation data

Basic dynamic load rating	C	24.5	kN
Basic static load rating	C_0	15.6	kN
Fatigue load limit	P_u	0.67	kN
Reference speed		13000	r/min
Limiting speed		9000	r/min
Calculation factor	k_r	0.07	
Calculation factor	e	0.8	
Calculation factor	X	0.63	
Calculation factor	Y_0	0.66	
Calculation factor	Y_1	0.78	
Calculation factor	Y_2	1.24	

Mass

Mass bearing	0.22	kg