Radio receiver unit
Antenna

Description **RA2-902**	Article number **6079100007**

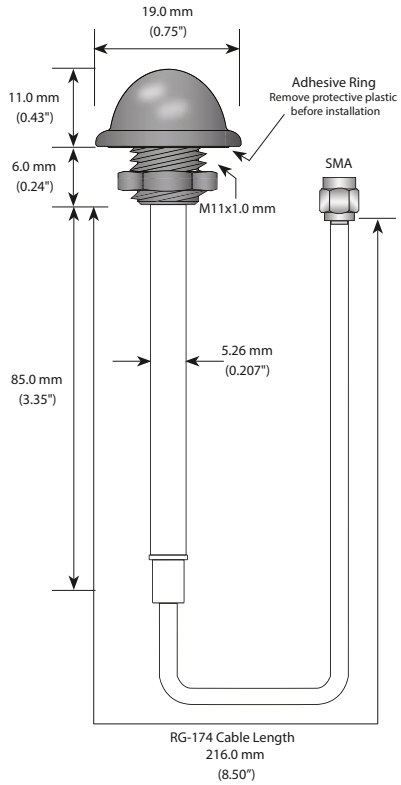

Casing material	Reinforced thermoplastic
Center frequency	915 MHz
Recom Frequency range	900 – 930 MHz
Bandwidth	30 MHz
Wavelength	½-wave
Voltage standing wave ratio (VSWR)	≤ 1,5 typical
Peak Gain	4,4 dBi
Impedance	50 Ω
Connection	SMA
Operating temperature range	-40 °C ... +90 °C
IP protection	Internal O-ring seal on connector
Compatible receiver	6079100009 (WR-902)